10-3930-641-24P

TECHNICAL MANUAL

**UNIT MAINTENANCE,
DIRECT SUPPORT
AND
GENERAL SUPPORT MAINTENANCE
REPAIR PARTS AND SPECIAL TOOLS LISTS**

TRUCK, CONTAINER HANDLER ROUGH TERRAIN, 50,000 LB CAPACITY DED, PT, WITH TOP HANDLER(S) NSN 3930-01-082-3758

This manual supersedes Microfiche TM10-3930-641-34P and TM10-3930-641-20P, dated September 1981

Approved for Public Release; Distribution is Unlimited

READEX FICHE best copy available

HEADQUARTERS, DEPARTMENT OF THE ARMY DECEMBER 1990

Reproduced from poor document.

D 101.11:

TECHNICAL MANUAL

*TM10-3930-641-24P

HEADQUARTERS
DEPARTMENT OF THE ARMY
Washington D.C., *27 December 1990*

UNIT MAINTENANCE, DIRECT SUPPORT AND GENERAL SUPPORT MAINTENANCE REPAIR PARTS AND SPECIAL TOOLS LISTS FOR

TRUCK, CONTAINER HANDLER ROUGH TERRAIN, 50,000 LB CAPACITY DED, PT, WITH TOP HANDLER(S) NSN 3930-01-082-3758

Current as of 2 May 1990

REPORTING ERRORS AND RECOMMENDING IMPROVEMENTS

You can help improve this manual. If you find any mistakes or if you know of a way to improve the procedures, please let us know. Mail your letter, DA Form 2028 (Recommended Changes to Publications and Blank Forms), or DA Form 2028-2 located in back of this manual direct to: U.S. Army Tank-Automotive Command, ATTN: AMSTA-MB, Warren, MI 48397-5000. A reply will be furnished to you.

Approved for Public Release; Distribution is Unlimited

TABLE OF CONTENTS

		Page	Illus Fig
SECTION I.	INTRODUCTION	1	
SECTION II.	REPAIR PARTS LIST	1-1	
GROUP 01	ENGINE		
	0100-ENGINE ASSEMBLY	1-1	
	ENGINE ASSEMBLY	1-1	1
	ENGINE SUPPORT, TRUNNION AND LIFTING BRACKET	2-1	2

*This publication supersedes Microfiche TM10-3930-641-34P and TM10-3930-641-20P, dated September 1981

TABLE OF CONTENTS

		Page	Illus Fig
	0101-CRANKCASE, BLOCK, CYLINDER HEAD	3-1	
	CYLINDER BLOCK ASSEMBLY	3-1	3
	ENGINE BLOCK COVERS	4-1	4
	CYLINDER HEAD ASSEMBLY	5-1	5
	0102-CRANKSHAFT	6-1	
	CRANKSHAFT AND DAMPER ASSEMBLY	6-1	6
	0103-FLYWHEEL ASSEMBLY	7-1	
	FLYWHEEL HOUSING ASSEMBLY	7-1	7
	0104-PISTONS, CONNECTING RODS	8-1	
	PISTON AND CONNECTING ROD ASSEMBLY	8-1	8
	0105-VALVES, CAMSHAFTS, AND TIMING SYSTEM	9-1	
	CAMSHAFT ASSEMBLIES	9-1	9
	VALVE COVERS (LEFT-AND RIGHT-HAND)	10-1	10
	VALVE ASSEMBLY	11-1	11
	VALVE MECHANISM ASSEMBLY	12-1	12
	TIMING GEAR HOUSING ASSEMBLY	13-1	13
	TIMING GEAR HOUSING COVERS	14-1	14
	TMING GEAR ASSEMBLY	15-1	15
	0106-ENGINE LUBRICATION SYSTEM	16-1	
	OIL PAN ASSEMBLY	16-1	16
	ENGINE OIL SUCTION LINES	17-1	17
	ENGINE OIL PUMP	18-1	18
	ENGINE OIL LINES	19-1	19
	ENGINE OIL COOLER ASSEMBLY	20-1	20
	ENGINE OIL FILTER ASSEMBLY	21-1	21
	ENGINE OIL FILTER AND BREATHER ASSEMBLIES	22-1	22
	ENGINE OIL LEVEL GAGE ASSEMBLY	23-1	23
	0108-MANIFOLDS	24-1	
	EXHAUST MANIFOLD	24-1	24
	0109-ACCESSORY DRIVING MECHANISMS	25-1	
	ACCESSORY DRIVE GEARS	25-1	25
	DRIVE GEAR, GOVERNOR AND FUEL PUMP	26-1	26
	TACHOMETER DRIVE	27-1	27
GROUP 03	FUEL SYSTEM		
	0302-FUEL PUMPS	28-1	
	FUEL INJECTION LINES AND NOZZLES	28-1	28
	FUEL INJECTION PUMP ASSEMBLY	29-1	29
	FUEL INJECTION PUMP	30-1	30
	FUEL INJECTION HOUSING ASSEMBLY	31-1	31
	FUEL TRANSFER PUMP AND DRAIN ASSEMBLY	32-1	32
	FUEL TRANSFER PUMP	33-1	33
	FUEL PUMP LINES	34-1	34
	FUEL LINES FASTENER ASSEMBLY	35-1	35
	FUEL PRIMING PUMP ASSEMBLY	36-1	36
	0304-AIR CLEANER	37-1	
	AIR CLEANER AND DUST EJECTOR ASSEMBLY	37-1	37
	0305-TURBOCHARGER	38-1	
	TURBOCHARGER AIR LINES	38-1	38
	TURBOCHARGER EXHAUST LINES	39-1	39
	TURBOCHARGER ASSEMBLY	40-1	40
	TURBOCHARGER OIL LINES	41-1	41
	0306-TANKS, LINES, HEADERS	42-1	
	FUEL TANK AND SWITCHES	42-1	42
	FUEL LINES	43-1	43

TABLE OF CONTENTS

		Page	Illus Fig
	0308-ENGINE SPEED GOVERNOR AND CONTROLS	44-1	
	GOVERNOR CONTROL	44-1	44
	GOVERNOR CONTROL ASSEMBLY	45-1	45
	GOVERNOR COVER ASSEMBLY	46-1	46
	GOVERNOR ASSEMBLY	47-1	47
	GOVERNOR PLATE ASSEMBLY	48-1	48
	GOVERNOR SPRING ASSEMBLY	49-1	49
	FUEL RATIO CONTROL ASSEMBLY	50-1	50
	0309-FUEL FILTERS	51-1	
	PRIMARY FUEL FILTER ASSEMBLY	51-1	51
	SECONDARY FUEL FILTER ASSEMBLY	52-1	52
	0311-ENGINE STARTING AIDS	53-1	
	ETHER STARTING AID	53-1	53
GROUP 04	EXHAUST SYSTEM		
	0401-MUFFLER AND PIPES	54-1	
	FUME DISPOSAL ASSEMBLY	54-1	54
	MUFFLER AND EXHAUST EXTENSION	55-1	55
GROUP 05	COOLING SYSTEM		
	0501-RADIATOR, EVAPORATIVE COOLER, OR HEAT EXCHANGER	56-1	
	RADIATOR COMPONENTS	56-1	56
	RADIATOR ASSEMBLY	57-1	57
	0503-WATER MANIFOLD, HEADER, THERMOSTATS AND HOUSING GASKETS	58-1	
	COOLANT FLOW SWITCH	58-1	58
	WATER LINES	59-1	59
	0504-WATER PUMP	60-1	
	WATER PUMP ASSEMBLY	60-1	60
	0505-FAN ASSEMBLY	61-1	
	FAN DRIVE ASSEMBLY	61-1	61
	FAN AND GUARD ASSEMBLY	62-1	62
	CRANKSHAFT PULLEY ASSEMBLY	63-1	63
	BELT TIGHTENER ASSEMBLY	64-1	64
	0507-AUXILIARY COOLING	65-1	
	HYDRAULIC OIL COOLER LINES	65-1	65
	HYDRAULIC OIL COOLER ASSEMBLY	66-1	66
	0508-WATER FILTER	67-1	
	COOLANT FILTER ASSEMBLY	67-1	67
GROUP 06	ELECTRICAL SYSTEM		
	0601-GENERATOR, ALTERNATOR	68-1	
	ALTERNATOR AND BELT ASSEMBLY	68-1	68
	ALTERNATOR ASSEMBLY	69-1	69
	0603-STARTING MOTOR	70-1	
	ELECTRIC STARTING MOTOR	70-1	70
	0606-ENGINE SAFETY CONTROLS	71-1	
	ELECTRIC SHUTOFF ASSEMBLY	71-1	71
	OIL LEVEL SWITCH	72-1	72
	ENGINE WIRING ASSEMBLY	73-1	73
	ENGINE WIRING HARNESS ASSEMBLY	74-1	74

TABLE OF CONTENTS

		Page	Illus Fig
	0607-INSTRUMENT CONTROL PANEL	75-1	
	LEFT-HAND INSTRUMENT PANEL	75-1	75
	LEFT-HAND INSTRUMENT PANEL WIRING HARNESS	76-1	76
	RIGHT-HAND INSTRUMENT PANEL	77-1	77
	RIGHT-HAND INSTRUMENT PANEL WIRING HARNESS	78-1	78
	CONSOLE WIRING ASSEMBLY	79-1	79
	CONSOLE WIRING HARNESS ASSEMBLY	80-1	80
	CONTAINER LOCK INDICATOR PANEL	81-1	81
	0609-LIGHTS	82-1	
	HEADLIGHT ASSEMBLY	82-1	82
	AUXILIARY ROPS-MOUNTED LIGHTS	83-1	83
	STOP AND TAIL LIGHT ASSEMBLY	84-1	84
	REAR LIGHTING GROUP	85-1	85
	CAB DOME LIGHT	86-1	86
	LAMP ASSEMBLIES	87-1	87
	0611-HORN, SIREN	88-1	
	BACK UP WARNING SYSTEM	88-1	88
	ELECTRIC HORN GROUP	89-1	89
	0612-BATTERIES	90-1	
	BATTERIES AND DISCONNECT SWITCH	90-1	90
	0613-HULL OR CHASSIS WIRING HARNESS	91-1	
	FRONT WIRING HARNESS ASSEMBLY	91-1	91
	REAR WIRING ASSEMBLY	92-1	92
	REAR WIRING HARNESS ASSEMBLY	93-1	93
	0615-RADIO INTERFERENCE SUPPRESSION	94-1	
	RADIO INTERFERENCE SUPPRESSION SYSTEM	94-1	94
GROUP 07	TRANSMISSION		
	0708-TORQUE CONVERTER OR FLUID COUPLING	95-1	
	TORQUE CONVERTER LINES	95-1	95
	PRESSURE RELIEF VALVE ASSEMBLY	96-1	96
	TORQUE CONVERTER	97-1	97
	TORQUE CONVERTER ASSEMBLY	98-1	98
	0710-TRANSMISSION ASSEMBLY	99-1	
	TRANSMISSION ARRANGEMENT	99-1	99
	TRANSMISSION CASE ASSEMBLY	100-1	100
	TRANSMISSION CONTROL ASSEMBLY	101-1	101
	NEUTRALIZER VALVE ASSEMBLY	102-1	102
	SELECTION AND PRESSURE CONTROL VALVE	103-1	103
	PLANETARY GEARS (NO. 1 CLUTCH)	104-1	104
	PLANETARY GEARS (NO. 2 AND 3 CLUTCH)	105-1	105
	PLANETARY GEARS (NO. 4 AND 6 CLUTCH)	106-1	106
	INPUT TRANSFER GEARS	107-1	107
	OUTPUT TRANSFER GEARS	108-1	108
	TRANSFER CASE ASSEMBLY	109-1	109
	TRANSMISSION CONTROL ASSEMBLY	110-1	110
	TRANSMISSION LOCK ASSEMBLY	111-1	111
	0721-COOLERS, PUMPS, MOTORS	112-1	
	TRANSMISSION OIL COOLER	112-1	112
	TRANSMISSION OIL PUMP	113-1	113
	TRANSMISSION OIL FILTER SUPPORT	114-1	114
	TRANSMISSION FILTER ASSEMBLY	115-1	115
	TRANSMISSION OIL FILTER	116-1	116
	POWER TRAIN OIL LINES	117-1	117
	SEQUENCE AND PRESSURE CONTROL VALVE ASSEMBLY	118-1	118

TABLE OF CONTENTS

		Page	Illus Fig
GROUP 09	PROPELLER AND PROPELLER SHAFTS		
	0900-PROPELLER SHAFTS	119-1	
	MAIN DRIVE SHAFT ASSEMBLY	119-1	119
	UPPER DRIVE SHAFT ASSEMBLY	120-1	120
GROUP 10	FRONT AXLE		
	1000-FRONT AXLE ASSEMBLY	121-1	
	DIFFERENTIAL ASSEMBLY	121-1	121
	1002-DIFFERENTIAL	122-1	
	DIFFERENTIAL ASSEMBLY	122-1	122
	BEVEL GEAR ASSEMBLY	123-1	123
GROUP 11	REAR AXLE		
	1100-REAR AXLE ASSEMBLY	124-1	
	REAR AXLE ASSEMBLY	124-1	124
GROUP 12	BRAKES		
	1201-HAND BRAKES	125-1	
	SAFETY BRAKE LINES GROUP	125-1	125
	PARKING BRAKE ASSEMBLY	126-1	126
	BRAKE CONTROL	127-1	127
	FINAL DRIVE AND BRAKE ASSEMBLY	128-1	128
	1202-SERVICE BRAKES	129-1	
	SERVICE BRAKE ASSEMBLY	129-1	129
	1204-HYDRAULIC BRAKE SYSTEM	130-1	
	SERVICE BRAKE LINES	130-1	130
	SERVICE BRAKE CONTROL ASSEMBLY	131-1	131
	SERVICE BRAKE CONTROL ASSEMBLY	132-1	132
	BRAKE ACCUMULATOR ASSEMBLY	133-1	133
	NEUTRALIZER VALVE ASSEMBLY	134-1	134
	PARKING BRAKE VALVE ASSEMBLY	135-1	135
	BRAKE ACCUMULATOR CHARGING VALVE ASSEMBLY	136-1	136
	BRAKE VALVE ASSEMBLY	137-1	137
	1206-MECHANICAL BRAKE SYSTEM	138-1	
	BRAKE PEDAL ASSEMBLY	138-1	138
GROUP 13	WHEELS		
	1311-WHEEL ASSEMBLY	139-1	
	FINAL DRIVE AND BRAKE GROUP	139-1	139
	RIM ASSEMBLY	140-1	140
	1313-TIRES	141-1	
	TIRE	141-1	141
GROUP 14	STEERING		
	1401-MECHANICAL STEERING GEAR ASSEMBLY	142-1	
	STEERING CONTROL SYSTEM (VALVE GROUP)	142-1	142
	STEERING CONTROL SYSTEM (VALVE GROUP, NEUTRAL)	143-1	143
	METERING PUMP ASSEMBLY	144-1	144
	ADJUSTABLE STEERING COLUMN ASSEMBLY	145-1	145
	STEERING CONTROL ASSEMBLY	146-1	146

TABLE OF CONTENTS

		Page	Illus Fig
	1402-TRACTOR HITCH STEERING	147-1	
	ARTICULATED HITCH	147-1	147
	1410-HYDRAULIC PUMP	148-1	
	STEERING AND BRAKE PUMP	148-1	148
	SUPPLEMENTAL STEERING PUMP	149-1	149
	1411-HOSES, LINES, FITTINGS	150-1	
	STEERING OIL FILTER	150-1	150
	SUPPLEMENTAL STEERING LINES	151-1	151
	STEERING OIL LINES	152-1	152
	STEERING OIL LINES	153-1	153
	1412-HYDRAULIC OR AIR CYLINDERS	154-1	
	STEERING CYLINDER AND MOUNTING	154-1	154
	1414-STEERING SYSTEM VALVES	155-1	
	DIVERTER VALVE ASSEMBLY	155-1	155
	STEERING NEUTRALIZER VALVE ASSEMBLY	156-1	156
	STEERING VALVE ASSEMBLY	157-1	157
	STEERING VALVE ASSEMBLY	158-1	158
GROUP 15	FRAME, TOWING ATTACHMENTS, AND DRAWBARS		
	1501-FRAME ASSEMBLY	159-1	
	FRAME ASSEMBLY, REAR	159-1	159
	FRAME ASSEMBLY, FRONT	160-1	160
	REAR BUMPER ASSEMBLY	161-1	161
	PLATFORM ASSEMBLY, CENTER	162-1	162
	PLATFORM ASSEMBLY, CAB	163-1	163
	PLATFORM ASSEMBLY, SIDE	164-1	164
	LADDER AND GUARD ASSEMBLY	165-1	165
	1502-COUNTERWEIGHTS	166-1	
	COUNTERWEIGHT ASSEMBLY	166-1	166
GROUP 18	BODY, CAB, HOOD AND HULL		
	1801-BODY, CAB, HOOD AND HULL ASSEMBLIES	167-1	
	GUARD AND HOOD ASSEMBLIES	167-1	167
	GUARD ASSEMBLIES	168-1	168
	PLATFORM SUPPORT ASSEMBLY	169-1	169
	ROLLOVER PROTECTION STRUCTURE (ROPS)	170-1	170
	CAB	171-1	171
	CAB ASSEMBLY	172-1	172
	WINDOW ASSEMBLY	173-1	173
	CAB DOOR ASSEMBLY	174-1	174
	1802-FENDERS	175-1	
	REAR FENDER ASSEMBLY	175-1	175
	FRONT FENDER ASSEMBLY	176-1	176
	1806-UPHOLSTERY SEATS AND CARPETS	177-1	
	SEAT, SEAT BELT AND ARM CUSHION ASSEMBLY	177-1	177
	SEAT ASSEMBLY	178-1	178
	SEAT SUSPENSION ASSEMBLY	179-1	179
GROUP 22	BODY CHASSIS OR HULL AND ACCESSORY ITEMS		
	2202-ACCESSORY ITEMS	180-1	
	WASHER AND WIPER ASSEMBLY	180-1	180
	FRONT WIPER MOTOR ASSEMBLY	181-1	181
	REAR WIPER ASSEMBLY	182-1	182

TABLE OF CONTENTS

		Page	Illus Fig
	REAR WIPER MOTOR ASSEMBLY	183-1	183
	REAR VIEW MOTOR ASSEMBLY	184-1	184
	REMOTE GREASE LINES	185-1	185
	CAB HEATER LINES	186-1	186
	CAB HEATER ASSEMBLY (HEATER GROUP)	187-1	187
	CAB HEATER ASSEMBLY (HEATER GROUP, FAN)	188-1	188
	AIR CONSOLE ASSEMBLY	189-1	189
	CAB HEATER	190-1	190
	CAB HEATER BLOWER ASSEMBLY	191-1	191
	BLOWER	192-1	192
	CAB HEATER HARNESS ASSEMBLY	193-1	193
	CAB AIR FILTER ASSEMBLY	194-1	194
GROUP 24	HYDRAULIC LIFT COMPONENTS		
	2401-HYDRAULIC PUMP	195-1	
	HYDRAULIC IMPLEMENT PUMP ASSEMBLY	195-1	195
	2404-HYDRAULIC TILT CYLINDERS AND TILT CRANK	196-1	
	TILT CYLINDER ASSEMBLY	196-1	196
	SIDE SHIFT AND SIDE TILT CYLINDERS	197-1	197
	2405-HYDRAULIC MAST COLUMN	198-1	
	MAST ASSEMBLY	198-1	198
	OUTER MAST AND MOUNTING ASSEMBLY	199-1	199
	LIFT CYLINDER ASSEMBLY	200-1	200
	CARRIAGE ASSEMBLY	201-1	201
	2406-HYDRAULIC LINES AND FITTINGS	202-1	
	ATTACHMENT LINES	202-1	202
	TILT CYLINDERS LINES	203-1	203
	LIFT CYLINDER LINES	204-1	204
	CARRIAGE LINES	205-1	205
	HYDRAULIC PUMP LINES	206-1	206
GROUP 33	SPECIAL PURPOSE KITS		
	3307-SPECIAL PURPOSE KITS	207-1	
	20 FOOT TOPHANDLER	207-1	207
	35 FOOT TOPHANDLER	208-1	208
	40 FOOT TOPHANDLER	209-1	209
	FORCE LIMITER - 20 FOOT	210-1	210
	FORCE LIMITER - 35 FOOT	211-1	211
	FORCE LIMITER - 40 FOOT	212-1	212
	HYDRAULIC LINES (SCHEMATIC) - 20 FOOT	213-1	213
	HYDRAULIC LINES (SCHEMATIC) - 35 FOOT	214-1	214
	HYDRAULIC LINES (SCHEMATIC) - 40 FOOT	215-1	215
	HYDRAULIC CYLINDER (TOPHANDLER)	216-1	216
GROUP 43	HYDRAULIC, FLUID, AIR AND VACUUM SYSTEM		
	4305-MANIFOLD AND/OR CONTROL VALVES	217-1	
	HYDRAULIC VALVE GROUP	217-1	217
	LIFT AND TILT VALVE ASSEMBLY	218-1	218
	CARRIAGE VALVE ASSEMBLY	219-1	219
	4308-LIQUID TANK OR RESERVOIRS	220-1	
	HYDRAULIC TANK MOUNTING	220-1	220
	HYDRAULIC TANK ASSEMBLY	221-1	221

TABLE OF CONTENTS

		Page	Illus Fig
	4309-HYDRAULIC CONTROLS	222-1	
	HYDRAULIC HAND CONTROLS ASSEMBLY	222-1	222
GROUP 94	REPAIR KITS		
	9401-REPAIR KITS	KIT-1	
	KIT	KIT-1	KIT
GROUP 95	GENERAL USE STANDARDIZED PARTS		
	9501-BULK MATERIEL	BULK-1	
	BULK MATERIEL	BULK-1	BULK
SECTION III.	SPECIAL TOOLS LIST		
GROUP 26	TOOLS AND TEST EQUIPMENT		
	2604-SPECIAL TOOLS	223-1	
	SPECIAL TOOLS	223-1	223
SECTION IV.	CROSS-REFERENCE INDEXES	I-1	
	NATIONAL STOCK NUMBER INDEX	I-1	
	PART NUMBER INDEX	I-39	
	FIGURE AND ITEM NUMBER INDEX	I-157	

UNIT MAINTENANCE,
DIRECT SUPPORT
AND
GENERAL SUPPORT MAINTENANCE
REPAIR PARTS AND SPECIAL TOOLS LIST

SECTION I. INTRODUCTION

1. Scope.

This RPSTL lists and authorizes spares and repair parts; special tools; special test, measurement, and diagnostic equipment (TMDE); and other special support equipment required for performance of Unit, Direct Support and General Support Maintenance of the Rough Terrain Container Handler (RTCH). It authorizes the requisitioning, issue, and disposition of spares, repair parts and special tools as indicated by the source, maintenance and recoverability (SMR) codes.

2. General.

In addition to Section I. Introduction, this Repair Parts and Special Tools List is divided into the following sections:

a. *Section II. Repair Parts List.* A list of spares and repair parts authorized by this RPSTL for use in the performance of maintenance. The list also includes parts which must be removed for replacement of the authorized parts. Parts lists are composed of functional groups in ascending alphanumeric sequence, with the parts in each group listed in ascending figure and item number sequence. Bulk materials are listed in item name sequence. Repair kits are listed separately in their own functional group within Section II. Repair parts for repairable special tools are also listed in the section. Items listed are shown on the associated illustration(s)/figure(s).

b. *Section III. Special Tools List.* A list of special tools, special TMDE, and other special support equipment authorized by this RPSTL (as indicated by Basis of Issue (BOI) information in DESCRIPTION AND USABLE ON CODE column) for the performance of maintenance.

c. *Cross-reference Indexes.* A list, in National Item Identification Number (NIIN) sequence, of all National stock numbered items appearing in the listing, followed by a list in alphanumeric sequence of all part numbers appearing; in the listings. National stock numbers and part numbers are cross-referenced to each illustration figure and item number appearance. The figure and item number index lists figure and item numbers in alphanumeric sequence and cross-references NSN, CAGE, and part numbers.

3. Explanation of Columns (Sections II and III).

a. *ITEM NO. (Column (1)).* Indicates the number used to identify items called out in the illustration.

b. *SMR CODE (Column (2)).* The Source, Maintenance, and Recoverability (SMR) code is a 5-position code containing supply/requisitioning information, maintenance category authorization criteria, and disposition instructions, as shown in the following breakout:

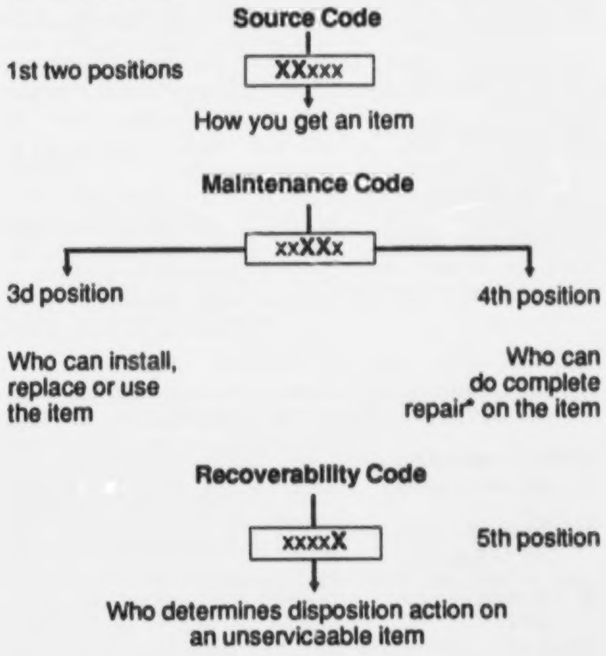

**Complete Repair*: Maintenance capacity, capability, and authority to perform all corrective maintenance tasks of the "Repair" function in a use/user environment in order to restore serviceability to a failed item.

(1) *Source Code.* The source code tells you how to get an item needed for maintenance, repair, or overhaul of an end item/equipment. Explanations of source codes follows:

Code	Application/Explanation
PA *PB* *PC*** *PD* *PE* *PF* *PG*	Stocked items; use the applicable NSN to request/requisition items with these source codes. They are authorized to the category indicated by the code entered in the 3d position of the SMR code. **Items coded PC are subject to deterioration.
KD *KF* *KB*	Items with these codes are not to be requested/requisitioned individually. They are part of a kit which is authorized to the maintenance category indicated in the 3d position of the SMR code. The complete kit must be requisitioned and applied.
MO-(Made at UM/AVUM Level) *MF-(Made at DS/AVUM Level)* *MH-(Made at GS Level)* *ML-(Made at Specialized Repair Act (SRA))* *MD-(Made at Depot)*	Items with these codes are not to be requested/requisitioned individually. They must be made from bulk material which is identified by the part number in the DESCRIPTION AND USABLE ON CODE (UOC) column and listed in the Bulk Material group of the repair parts list in this RPSTL. If the item is authorized to you by the 3d position code of the SMR code, but the source code indicates it is made at a higher level, order the item from the higher level of maintenance.
AO-(Assembled by UM/AVUM Level) *AF-(Assembled by DS/AVIM Level)* *AH-(Assembled by GS Category* *AL-(Assembled by SRA)* *AD-(Assembled by Depot)*	Items with these codes are not to be requested/requisitioned individually. The parts that make up the assembled item must be requisitioned or fabricated and assembled at the level of maintenance indicated by the source code. If the 3d position code of the SMR code authorizes you to replace the item, but the source code indicates the item is assembled at a higher level, order the item from the higher level of maintenance.
XA -	Do not requisition an "XA"-coded item. Order its next higher assembly. (Also, refer to the NOTE below.)
XB -	If an "XB" item is not available from salvage, order it using the FSCM and part number given.
XC -	Installation drawing, diagram, instruction sheet, field service drawing, that is identified by the manufacturer's part number.
XD -	Item is not stocked. Order an "XD"-coded item through normal supply channels using the CAGE and part number given, if no NSN is available.

NOTE: Cannibalization or controlled exchange, when authorized, may be used as source of supply for items with the above source codes, except for those source coded "XA" or those aircraft support items restricted by requirements of AR 700-42.

(2) *Maintenance Code.* Maintenance codes tell you the level(s) of maintenance authorized to USE and REPAIR support items. The maintenance codes are entered in the third and fourth positions of the SMR Code as follows:

(a) The maintenance code entered in the third position tells you the lowest maintenance level authorized to remove, replace, and use an item. The maintenance code entered in the third position will indicate authorization to one of the following levels of maintenance.

Code	Application/Explanation
C -	Crew or operator maintenance done within unit maintenance or aviation unit maintenance.
O -	Unit maintenance or aviation unit category can remove, replace, and use the item.
F -	Direct support or aviation intermediate level can remove, replace, and use the item.
H -	General support level can remove, replace, and use the item.
L -	Specialized repair activity can remove, replace, and use the item.
D -	Depot level can remove, replace, and use the item.

(b) The maintenance code entered in the fourth position tells whether or not the item is to be repaired and identifies the lowest maintenance level with the capability to do complete repair (i.e., perform all authorized repair functions.) (NOTE: Some limited repair may be done on the item at a lower level of maintenance, if authorized by the Maintenance Allocation Chart (MAC) and SMR codes.) This position will contain one of the following maintenance codes:

Code	Application/Explanation
O -	Unit maintenance or Aviation unit is the lowest level that can do complete repair of the item.
F -	Direct support or aviation intermediate is the lowest level that can do complete repair of the item.
H -	General support is the lowest level that can do complete repair of the item.
L -	Specialized repair activity is the lowest level that can do complete repair of the item.
D -	Depot is the lowest level that can do complete repair of the item.
Z -	Nonreparable. No repair is authorized.
B -	No repair is authorized. (No parts or special tools are authorized for the maintenance of a "B" coded item). However, the item may be reconditioned by adjusting, lubrication, etc., at the user level.

(3) *Recoverability Code.* Recoverability codes are assigned to items to indicate the disposition action on unserviceable items. The recoverability code is entered in the fifth position of the SMR Code as follows:

Code	Application/Explanation
Z -	Nonreparable item. When unserviceable, condemn and dispose of the item at the level of maintenance shown in 3d position of SMR Code.
O -	Reparable item. When uneconomically reparable, condemn and dispose of the item at unit maintenance or aviation unit level.
F -	Reparable item. When uneconomically reparable, condemn and dispose of the item at the direct support or aviation intermediate level.
H -	Reparable item. When uneconomically reparable, condemn and dispose of the item at the general support level.
D -	Reparable item. When beyond lower level repair capability, return to depot. Condemnation and disposal of item not authorized below depot level.
L -	Reparable item. Condemnation and disposal of item not authorized below specialized repair activity (SRA).
A -	Item requires special handling or condemnation procedures because of specific reasons (e.g., precious metal content, high dollar value, critical material, or hazardous material). Refer to appropriate manuals/directives for specific instructions.

c. *CAGEC (Column (3)).* The Commerical And Government Entity (CAGE) Code (C) is a 5-digit alphanumeric code which is used to identify the manufacturer, distributor, or Government agency, etc., that supplies the item.

d. *PART NUMBER (Column (4)).* Indicates the primary number used by the manufacturer (individual, company, firm, corporation, or Government activity), which controls the design and characteristics of the item by means of its engineering drawings, specifications standards, and inspection requirements to identify an item or range of items.

NOTE: When you use a NSN to requisition an item, the item you receive may have a different part number form the part ordered.

e. *DESCRIPTION AND USABLE ON CODE (UOC) (Column (5)).* This column includes the following information:

(1) The Federal item name and, when required, a minimum description to identify the item.

(2) Physical security classification. Not applicable

(3) Items that are included in kits and sets are listed below the name of the kit or set on Figure KIT.

(4) Spare/repair parts that make up and assembled item are listed immediately following the assembled item line entry.

(5) Part numbers for bulk materials are referenced in this column in the line item entry for the item to be manufactured/fabricated.

(6) When the item is not used with all serial numbers of the same model, the effective serial numbers are shown on the last line(s) of the description (before UOC). Not applicable.

(7) The usable on code, when applicable (see paragraph 5, Special information)

(8) In the Special Tools List section, the basis of issue (BOI) appears as the last line(s) in the entry for each special tool, special TMDE, and other special support equipment. When density of equipments supported exceeds density spread indicated in the basis of issue, the total authorization is increased proportionately.

(9) The statement "END OF FIGURE" appears just below the last item description in Column 5 for a given figure in both Section II and Section III.

f. *QTY (Column (6)).* The QTY (quantity per figure column) indicates the quantity of the item used in the breakout shown on the illustration figure, which is prepared for a functional group, subfunctional group, or an assembly. A "V" appearing in this column in lieu of a quantity indicates that the quantity is variable and the quantity may vary from application to application.

4. Explanation of Columns (Section IV).

a. *NATIONAL STOCK NUMBER (NSN) INDEX.*

(1) *STOCK NUMBER column.* This column lists the NSN by National item identification number (NIIN) sequence. The NIIN consists of the last nine digits of the NSN (i.e., 5305-01-674-1467.) When using this column to locate an item, ignore the first 4 digits of the NSN. However, the complete NSN should be used when ordering items by stock number.

(NSN = 5305-01-674-1467; NIIN = 01-674-1467)

(2) *FIG. column.* This column lists the number of the Figure where the item is identified/located. The figures are in numerical order in Section II and Section III.

(3) *ITEM column.* The item number identifies the item associated with the figure listed in the adjacent FIG. column. This item is also identified by the NSN listed on the same line.

b. *PART NUMBER INDEX.* Part numbers in this index are listed by part number in ascending alphanumeric sequence (i.e., vertical arrangement of letter and number combination which places the first letter or digit of each group in order A through Z, followed by the numbers 0 through 9 and each following letter or digit in like order.)

(1) *CAGEC column.* The Commerical And Government Entity (CAGE) Code (C) is a 5 digit alphanumeric code used to identify the manufacturer, distributor, or Government agency, etc., that supplies the item.

(2) *PART NUMBER column.* Indicates the primary number used by the manufacturer (individual, firm, corporation, or Government activity), which controls the design and characteristics of the item by means of its engineering drawings, specifications standards, and inspection requirements to identify an item or range of items.

(3) *STOCK NUMBER column.* This column lists the NSN for the associated part number and manufacturer identified in the PART NUMBER and CAGEC columns to the left.

(4) *FIG. column.* This column lists the number of the figure where the item is identified/located in Section II and III.

(5) *ITEM column.* The item number is that number assigned to the item as it appears in the figure referenced in the adjacent figure number column.

c. *FIGURE AND ITEM NUMBER INDEX.*

(1) *FIG. column.* This column lists the number of the figure where the item is identified/located in Section II and III.

(2) *ITEM column.* The item number is that number assigned to the item as it appears in the figure referenced in the adjacent figure number column.

(3) *STOCK NUMBER column.* This column lists the NSN for the item.

(4) *CAGEC column.* The Commerical And Government Entity (CAGE) Code (C) is a 5-digit alphanumeric code used to identify the manufacturer, distributor, or Government agency, etc., that supplies the item.

(5) *PART NUMBER column.* Indicates the primary number used by the manufacturer (individual, firm, corporation, or Government activity), which controls the design and characteristics of the item by means of its engineering drawings, specifications standards, and inspection requirements to identify an item or range of items.

5. Special Information.

Use the following subparagraphs as applicable:

a. *USABLE ON CODE.* Not Applicable.

b. *FABRICATION INSTRUCTIONS.* Bulk materials required to manufacture items are listed in the Bulk Material Functional Group of this RPSTL. Part numbers for bulk materials are also referenced in the description column of the line item entry for the item to be manufactured/fabricated. Detailed fabrication instructions for items source coded to be manufactured or fabricated are found in TM 10-3930-641-34.

c. *ASSEMBLY INSTRUCTION.* Detailed assembly instructions for items source coded to be assembled from component spare/repair parts are found in TM 10-3930-641-34. Items that make up the assembly are listed immediately following the assembly item entry or reference is made to an applicable figure.

d. *KITS.* Line item entries for repair parts kits appear in group 9401 in Section II.

e. *INDEX NUMBERS.* Items which have the word BULK in the figure column will have and index number shown in the item number column. This index number is a cross-reference between the National Stock Number/Part Number Index and the bulk material list in Section II.

f. *ASSOCIATED PUBLICATIONS.* The publications listed below pertain to the Rough Terrain Container Handler and its components:

Publication	Short Title
LO 10-3930-641-12	Truck, (RTCH)
TM 10-3930-641-10	Truck, (RTCH)
TM 10-3930-641-20	Truck, (RTCH)
TM 10-3930-641-34-1	Truck, (RTCH)
TM 10-3930-641-34-2	Truck, (RTCH)

6. How to locate Repair Parts.

a. *When National Stock Number or Part Number is Not Known.*

(1) *First.* Using the table of contents, determine the assembly group or subassembly group to which the item belongs. This is necessary since figures are prepared for assembly groups and subassembly groups, and listings are divided into the some groups.

(2) *Second.* Find the figure covering the assembly group or subassembly group to which the item belongs.

(3) *Third.* Identify the item on the figure and use the Figure and Item Number Index to find the NSN.

b. *When National Stock Number or Part Number is Known:*

(1) *First.* Using the National Stock Number or the Part Number Index, find the pertinent National Stock Number or Part Number. The NSN index is in National Item Identification Number (NIIN) sequence (see 4.1(1)). The part numbers in the Part Number index are listed in ascending alphanumeric sequence (see 4.b). Both indexes cross-reference you to the illustration/figure and item number of the item you are looking for.

(2) *Second.* Turn to the figure and item number, verify that the item is the one you're looking for, then locate the item number in the repair parts list for the figure.

7. Abbreviations.

For standard abbreviations see MIL-STD-12D, Military Standard Abbreviations For Use On Drawings, Specifications, Standards And In Technical Documents.

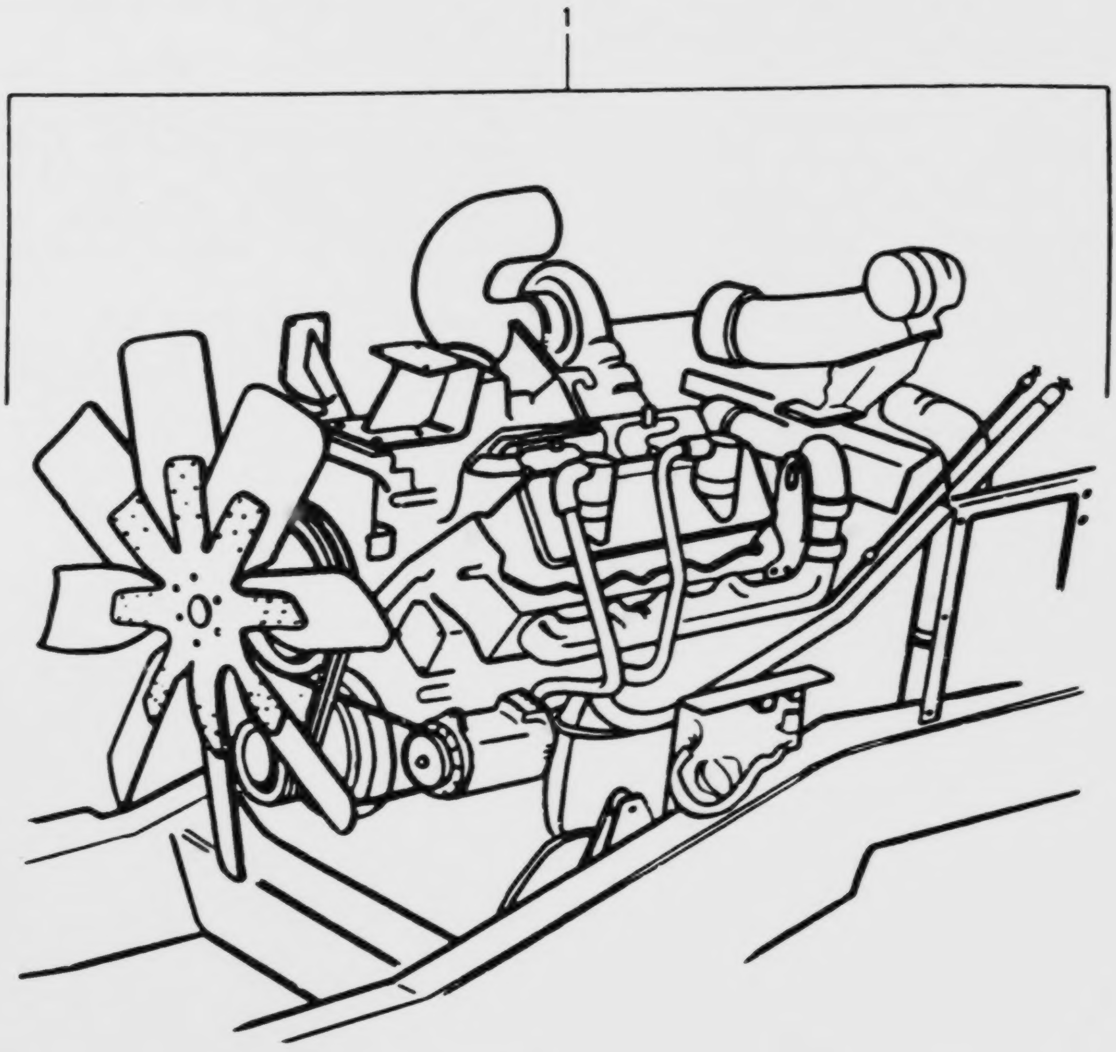

FIGURE 1. ENGINE ASSEMBLY

(1) ITEM NO	(2) SMR CODE	(3) CAGEC	(4) PART NUMBER	(5) DESCRIPTION AND USABLE ON CODES(UOC)	(6) QTY
				GROUP 01: ENGINE	
				GROUP 0100: ENGINE ASSEMBLY	
				FIG. 1 ENGINE ASSEMBLY	
1	PBFFH	11083	5R4536	ENGINE ASSEMBLY....................	1
				END OF FIGURE	

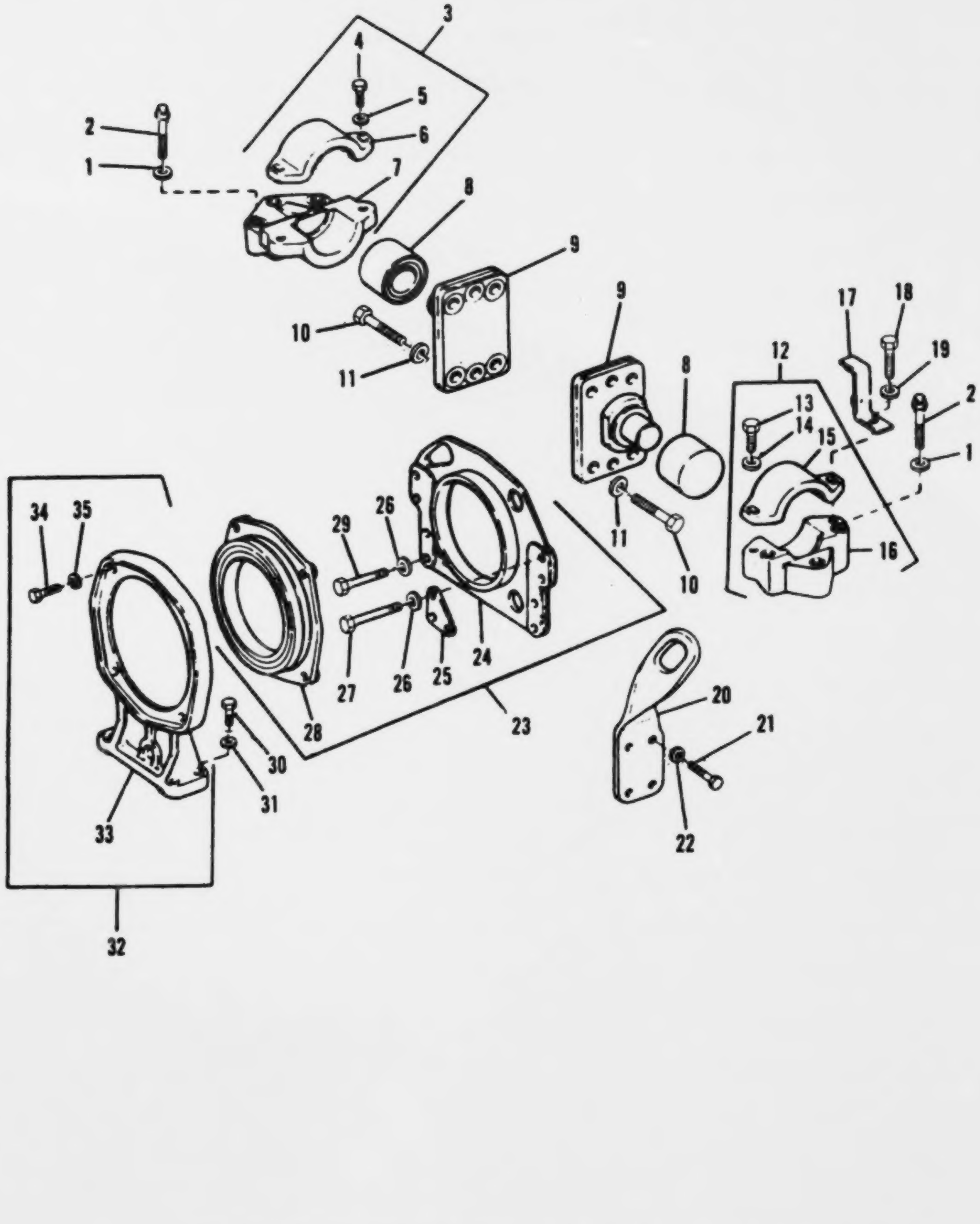

FIGURE 2. ENGINE SUPPORT, TRUNNION AND LIFTING BRACKET

(1) ITEM NO	(2) SMR CODE	(3) CAGEC	(4) PART NUMBER	(5) DESCRIPTION AND USABLE ON CODES(UOC)	(6) QTY
				GROUP 0100: ENGINE ASSEMBLY	
				FIG. 2 ENGINE SUPPORT, TRUNNION AND LIFTING BRACKET	
1	PAFZZ	11083	4J2677	WASHER,FLAT........................... UOC:V53	6
2	PAFZZ	11083	6J3513	BOLT,MACHINE......................... UOC:V53	6
3	XBFZZ	11083	1V6546	SUPPORT ASSY......................... UOC:V53	1
4	PAFZZ	96906	MS90728-163	.SCREW,CAP,HEXAGON H............... UOC:V53	2
5	PAFZZ	11083	4D3704	.WASHER,FLAT......................... UOC:V53	2
6	XAFZZ	11083	8D5673	.CAP................................. UOC:V53	1
7	XAFZZ	11083	1V6545	.SUPPORT............................. UOC:V53	1
8	PFFZZ	11083	7N1164	MOUNT ASSEMBLY....................... UOC:V53	2
9	XBFZZ	11083	6N0966	SUPPORT.............................. UOC:V53	2
10	PAFZZ	11083	2A1538	BOLT,MACHINE......................... UOC:V53	12
11	PAFZZ	11083	5P8248	WASHER,FLAT.......................... UOC:V53	12
12	XBFZZ	11083	1V6547	SUPPORT ASSY......................... UOC:V53	1
13	PAFZZ	96906	MS90728-163	.SCREW,CAP,HEXAGON H............... UOC:V53	2
14	PAFZZ	11083	5P8247	.WASHER,FLAT......................... UOC:V53	2
15	XAFZZ	11083	8D5673	.CAP................................. UOC:V53	1
16	XBFFF	11083	1V6544	.SUPPORT............................. UOC:V53	1
17	XBFZZ	11083	8N3117	BRACKET ASSY......................... UOC:V53	1
18	PAFZZ	96906	MS90728-164	SCREW,CAP,HEXAGON H................ UOC:V53	1
19	PAFZZ	11083	5P8248	WASHER,FLAT.......................... UOC:V53	6
20	XBFZZ	11083	7N1751	BRACKET,LIFTING...................... UOC:V53	2
21	PAFZZ	96906	MS90728-113	SCREW,CAP,HEXAGON H................ UOC:V53	8
22	PFFZZ	11083	2M849	WASHER,FLAT.......................... UOC:V53	8
23	XBFFF	11083	4N4303	TRUNNION GP,ENG...................... UOC:V53	1
24	PAFZZ	11083	4N1706	.ADAPTER.............................	1

(1) ITEM NO	(2) SMR CODE	(3) CAGEC	(4) PART NUMBER	(5) DESCRIPTION AND USABLE ON CODES(UOC)	(6) QTY
				UOC:V53	
25	XBFZZ	11083	6N9365	.BRKT,ALT BRKT SPRT.................. UOC:V53	1
26	PFFZZ	11083	2M849	.WASHER,FLAT......................... UOC:V53	8
27	PAFZZ	11083	8S9089	.BOLT,SPECIAL........................ UOC:V53	2
28	XBFZZ	11083	6N6013	.MOUNT ASSY.......................... UOC:V53	1
29	PAFZZ	11083	S1573	.BOLT,MACHINE........................ UOC:V53	6
30	PAFZZ	11083	1A8063	BOLT,MACHINE......................... UOC:V53	4
31	PAFZZ	11083	5P8248	WASHER,FLAT.......................... UOC:V53	4
32	XDFZZ	11083	4N2184	SUPPORT GP,ENGINE,F.................. UOC:V53	1
33	XBFZZ	11083	4N2084	.SUPPORT............................. UOC:V53	1
34	PAFZZ	11083	S1566	.BOLT,MACHINE........................ UOC:V53	4
35	PAFZZ	11083	4D3704	.WASHER,FLAT......................... UOC:V53	4

END OF FIGURE

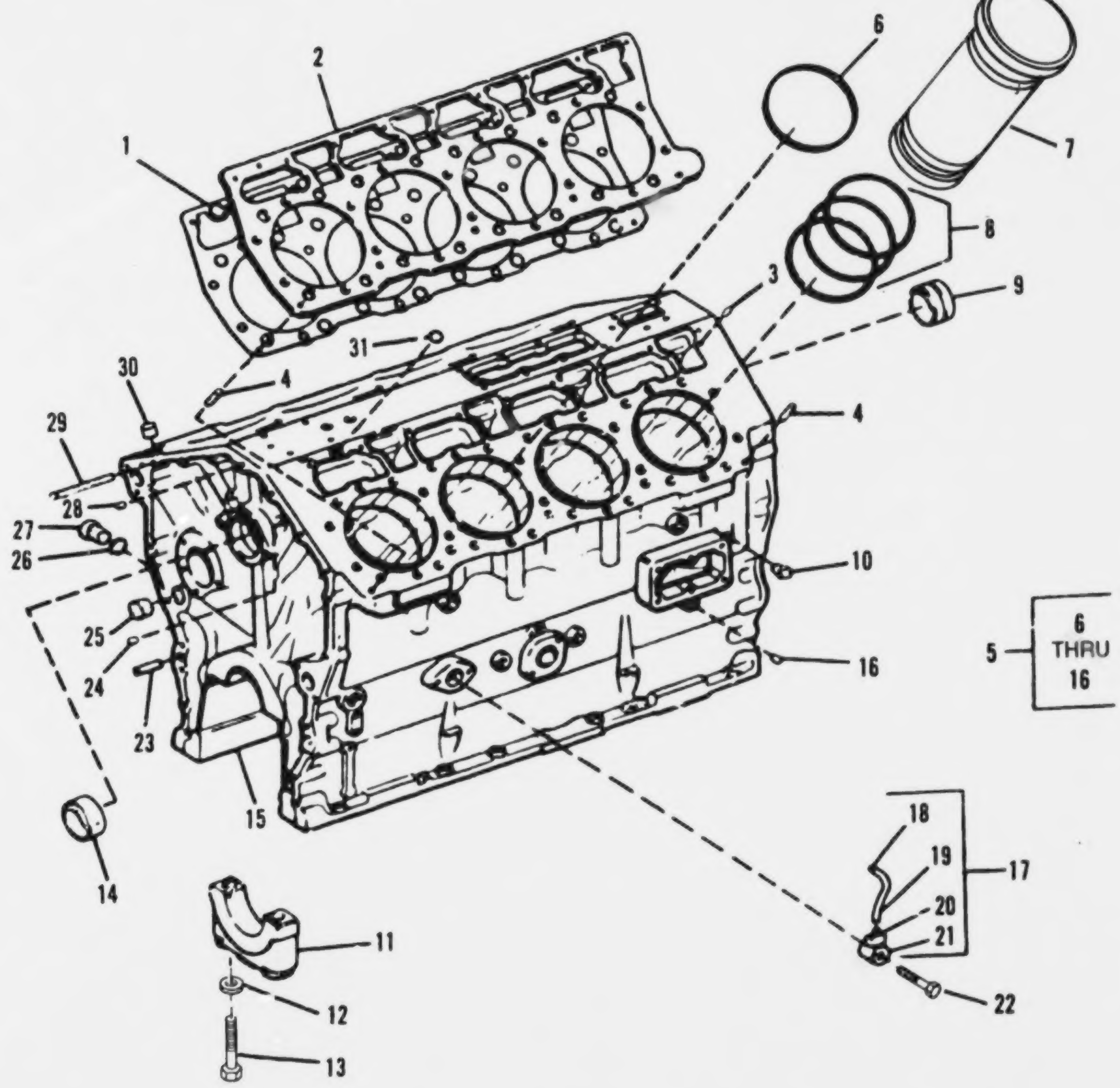

FIGURE 3. CYLINDER BLOCK ASSEMBLY

(1) ITEM NO	(2) SMR CODE	(3) CAGEC	(4) PART NUMBER	(5) DESCRIPTION AND USABLE ON CODES(UOC)	(6) QTY
				GROUP 0101 CYLINDER BLOCK ASSEMBLY	
				FIG. 3 CYLINDER BLOCK ASSEMBLY	
1	KFHZZ	11083	6N9133	GASKET,PLATE PART OF KIT P/N 5R4553. UOC:V53	2
2	XDHZZ	11083	4N4178	PLATE.............................. UOC:V53	2
3	PAHZZ	11083	3S6605	CAP,PROTECTIVE,DUST................ UOC:V53	2
4	PAHZZ	11083	4N1650	DOWEL.............................. UOC:V53	4
5	XDHHH	11083	7N9682	BLOCK ASSY,CYL..................... UOC:V53	1
6	PAHZZ	11083	9L5854	.GASKET PART OF KIT P/N 5R4553 PART OF KIT P/N 5P8057.................. UOC:V53	8
7	PAHZZ	11083	1W6280	.CYLINDER SLEEVE................... UOC:V53	8
8	PAHZZ	11083	6V5121	.SEAL PART OF KIT P/N 5P8057........ UOC:V53	24
9	PAHZZ	11083	4N0685	.BEARING........................... UOC:V53	3
10	PAHZZ	6N299	0920416	.PLUG,PIPE......................... UOC:V53	2
11	XDHZZ	11083	4N0614	.CAP,BEARING....................... UOC:V53	5
12	PAHZZ	11083	9H1031	.WASHER,FLAT....................... UOC:V53	10
13	PAHZZ	11083	3P1323	.BOLT.............................. UOC:V53	10
14	PAHZZ	11083	4N6658	.BEARING........................... UOC:V53	2
15	XAHZZ	11083	7N9364	.BLOCK............................. UOC:V53	1
16	PAHZZ	79470	C3169X6	.PLUG,PIPE......................... UOC:V53	4
17	PAFZZ	11083	4N9881	TUBE ASSEMBLY,METAL................ UOC:V53	8
18	XAFZZ	11083	4N9879	.TUBE.............................. UOC:V53	1
19	XAFZZ	11083	4N9880	.BODY.............................. UOC:V53	1
20	XAFZZ	11083	6N1433	.BLOCK............................. UOC:V53	1
21	XAFZZ	11083	6N1432	.INSERT............................ UOC:V53	1
22	PAHZZ	11083	4N9916	SCREW.............................. UOC:V53	8
23	PAHZZ	11083	4N0683	DOWEL.............................. UOC:V53	4
24	PAFZZ	19207	117244	PLUG,PIPE..........................	4

(1) ITEM NO	(2) SMR CODE	(3) CAGEC	(4) PART NUMBER	(5) DESCRIPTION AND USABLE ON CODES(UOC)	(6) QTY
				UOC:V53	
25	PAHZZ	11083	4N693	PLUG,MACHINE THREAD................ UOC:V53	3
26	PAHZZ	81349	M83248/2-910	PACKING,PREFORMED PART OF KIT P/N 5R4553 PART OF KIT P/N 6V220........ UOC:V53	4
27	PAHZZ	11083	9S4190	PLUG............................. UOC:V53	4
28	PAHZZ	89346	5041CDA	PLUG,PIPE........................ UOC:V53	9
29	PAHZZ	11083	6L4428	STUD,PLAIN....................... UOC:V53	3
30	PAHZZ	11083	3BC645	PLUG,EXPANSION................... UOC:V53	1
31	PAHZZ	11083	8M8283	SEAL PART OF KIT P/N 5R4553 PART OF KIT P/N 5P9843...................... UOC:V53	2

END OF FIGURE

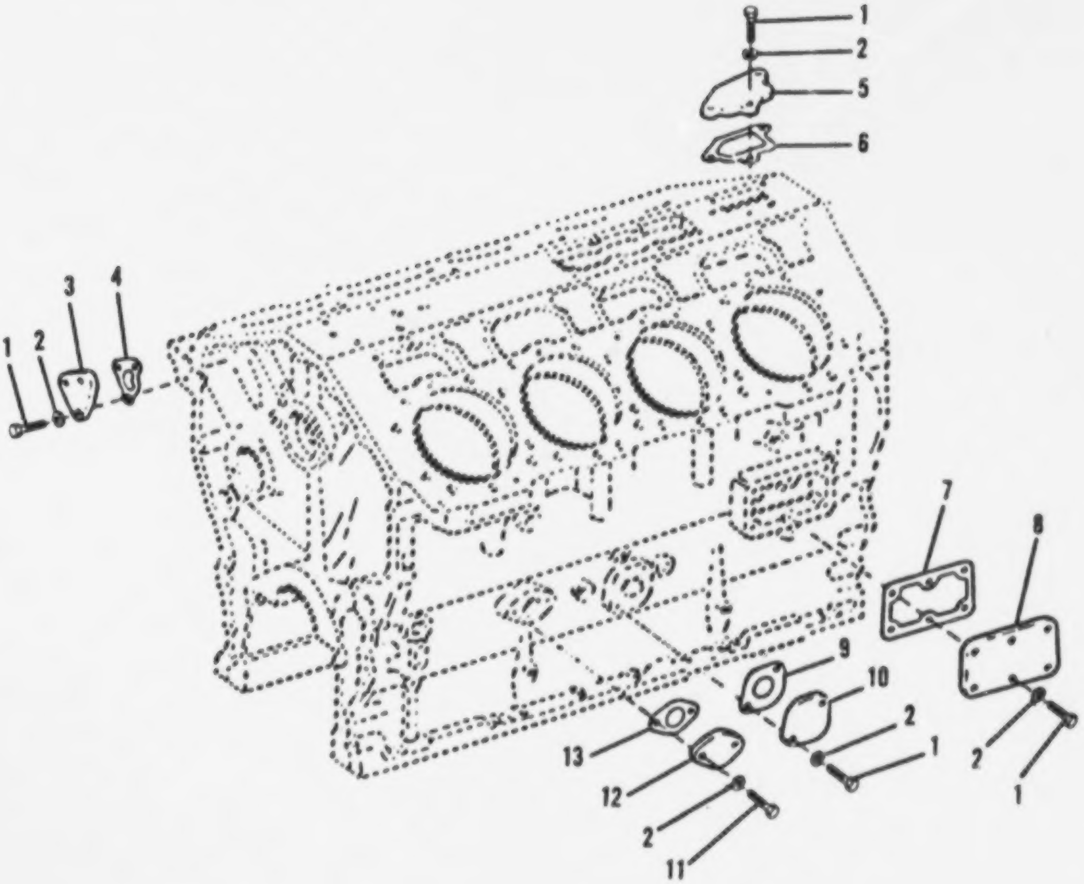

FIGURE 4. ENGINE BLOCK COVERS

(1) ITEM NO	(2) SMR CODE	(3) CAGEC	(4) PART NUMBER	(5) DESCRIPTION AND USABLE ON CODES(UOC)	(6) QTY
				GROUP 0101 ENGINE BLOCK COVERS	
				FIG. 4 ENGINE BLOCK COVERS	
1	PAOZZ	11083	0S1594	BOLT,MACHINE........................ UOC:V53	13
2	PAOZZ	11083	5M2894	WASHER,FLAT......................... UOC:V53	15
3	XDOZZ	11083	4N1683	COVER............................... UOC:V53	1
4	PAOZZ	11083	4N1684	GASKET PART OF KIT P/N 5R4553 PART OF KIT P/N 6V220.................... UOC:V53	1
5	XDOZZ	11083	4N1779	COVER............................... UOC:V53	1
6	PAOZZ	11083	4N4307	GASKET PART OF KIT P/N 5R4553 PART OF KIT P/N 6V220.................... UOC:V53	1
7	PAOZZ	11083	4N864	GASKET PART OF KIT P/N 5R4553 PART OF KIT P/N 6V220.................... UOC:V53	1
8	XDOZZ	11083	4N1682	COVER............................... UOC:V53	1
9	PAOZZ	11083	4N0750	GASKET PART OF KIT P/N 5R4553 PART OF KIT P/N 5P9843 PART OF KIT P/N 6V220.............................. UOC:V53	1
10	PFOZZ	11083	4N0754	COVER............................... UOC:V53	1
11	PAOZZ	11083	0L1351	BOLT,MACHINE........................ UOC:V53	2
12	PAOZZ	11083	2P2772	COVER,HOUSING....................... UOC:V53	1
13	PAOZZ	11083	4N0933	GASKET PART OF KIT P/N 5R4553 PART OF KIT P/N 6V220.................... UOC:V53	1

END OF FIGURE

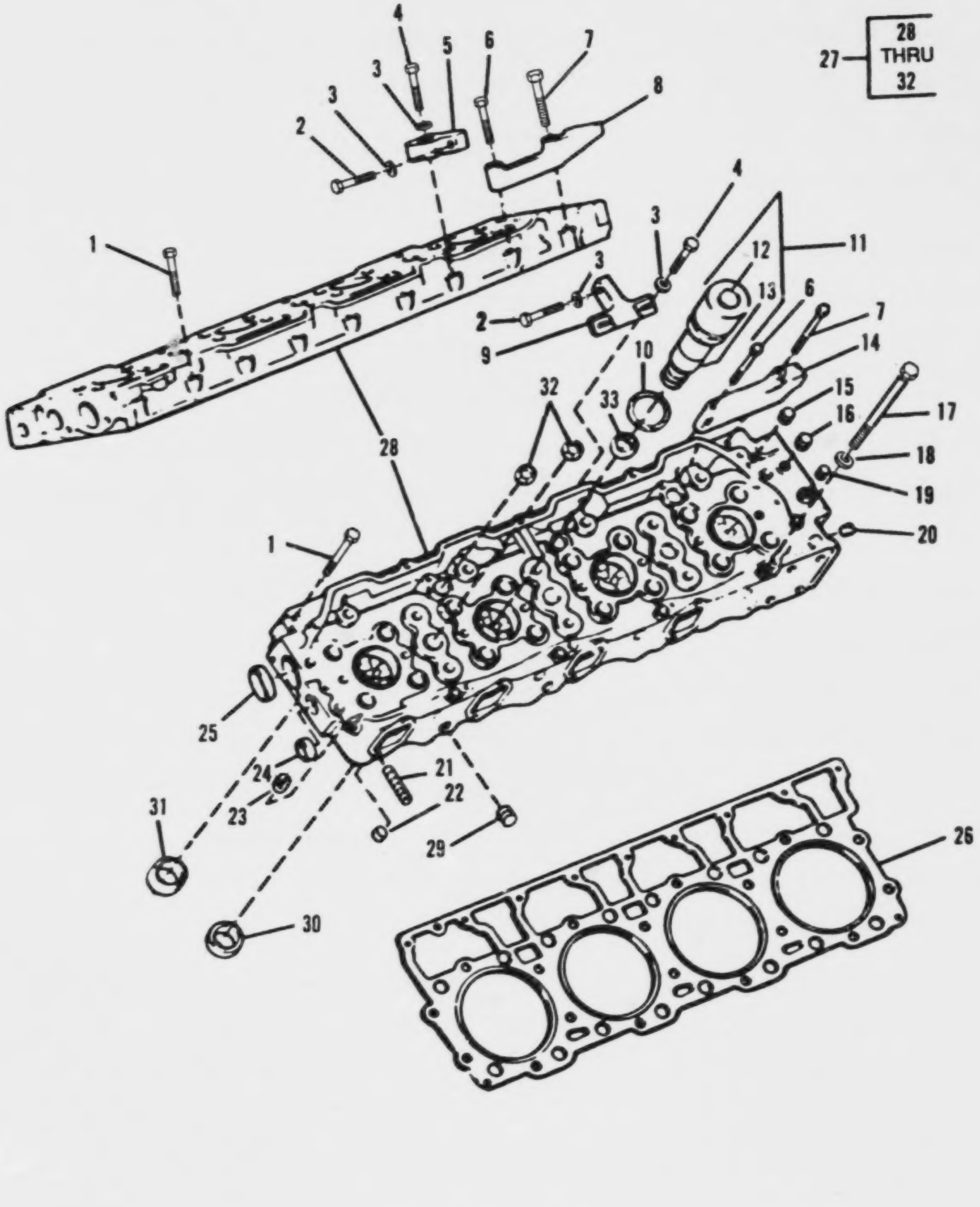

FIGURE 5. CYLINDER HEAD ASSEMBLY

(1) ITEM NO	(2) SMR CODE	(3) CAGEC	(4) PART NUMBER	(5) DESCRIPTION AND USABLE ON CODES(UOC)	(6) QTY
				GROUP 0101 CYLINDER HEAD	
				FIG. 5 CYLINDER HEAD ASSEMBLY	
1	PAFZZ	11083	L1352	BOLT,MACHINE.......................... UOC:V53	11
2	PAFZZ	11083	0S1591	SCREW................................. UOC:V53	2
3	PAFZZ	11083	5M2894	WASHER,FLAT........................... UOC:V53	5
4	PAFZZ	11083	8S9191	BOLT,MACHINE.......................... UOC:V53	3
5	XDFZZ	11083	9N2583	BRACKET,FUEL PUMP,L................... UOC:V53	1
6	PAFZZ	11083	1A5183	BOLT,MACHINE.......................... UOC:V53	2
7	PAFZZ	11083	5B2638	SCREW,CAP,HEXAGON H................... UOC:V53	2
8	XDFZZ	11083	6N6731	SUPPORT,TMG GR HSG.................... UOC:V53	1
9	XDFZZ	11083	9N2607	BRACKET,FUEL PUMP,R................... UOC:V53	1
10	PAFZZ	11083	2S2251	SEAL,ENGINE PART OF KIT P/N 5R4553.. UOC:V53	8
11	PBFZZ	11083	8N9457	INJECTOR ASSEMBLY,F................... UOC:V53	8
12	XAFZZ	11083	4N7515	.ADAPTER.............................. UOC:V53	1
13	XAFZZ	11083	6N5857	.TUBE................................. UOC:V53	1
14	XDFZZ	11083	6N6732	SUPPORT,TMG GR HSG.................... UOC:V53	1
15	PAFZZ	11083	5M6214	PLUG,PIPE............................. UOC:V53	2
16	PAFZZ	09367	0920416	PLUG,PIPE............................. UOC:V53	2
17	PAFZZ	11083	2H3750	BOLT.................................. UOC:V53	28
18	PAFZZ	11083	1F9233	WASHER,FLAT........................... UOC:V53	28
19	PAFZZ	11083	2B0858	PLUG,PIPE............................. UOC:V53	2
20	PAFZZ	11083	1B5174	PLUG,PIPE............................. UOC:V53	2
21	PAFZZ	11083	6V5659	STUD,PLAIN............................ UOC:V53	16
22	PAFZZ	11083	4W1055	PACKING WITH RETAIN PART OF KIT P/N 5R4553........................... UOC:V53	32
23	XDFZZ	11083	3S5390	BRACKET,ANGLE......................... UOC:V53	2
24	PAFZZ	11083	5P63	PLUG,EXPANSION........................	4

(1) ITEM NO	(2) SMR CODE	(3) CAGEC	(4) PART NUMBER	(5) DESCRIPTION AND USABLE ON CODES(UOC)	(6) QTY
				UOC:V53	
25	PAFZZ	11083	4N932	CAP-PLUG,PROTECTIVE.................. UOC:V53	2
26	PAFZZ	11083	2W7984	GASKET PART OF KIT P/N 5R4553 PART OF KIT P/N 5P9843.................. UOC:V53	2
27	PBHZZ	11083	6N9978	CYLINDER HEAD,DIESE.................. UOC:V53	2
28	XAHHH	11083	6N9976	.HEAD,CYL......................... UOC:V53	1
29	PAFZZ	11083	3B0623	.PLUG,EXPANSION...................... UOC:V53	8
30	PAFZZ	11083	4N5893	.SEAT,VALVE ,VALVE SEAT,INTAKE..... UOC:V53	8
30	PBFZZ	11083	4S8898	.SEAT,VALVE ,INSERT,INTAKE,0.005 IN (.13MM) OS...................... UOC:V53	8
30	PBFZZ	11083	4S8899	.SEAT,VALVE ,INSERT,INTAKE,0.010 IN (.26MM) OS...................... UOC:V53	8
31	PAFZZ	11083	1W5283	.SEAT,VALVE.......................... UOC:V53	8
31	PAFZZ	11083	4S8902	.SEAT,VALVE ,INSERT,EXH,0.005 IN (.13MM) OS.......................... UOC:V53	8
31	PAFZZ	11083	4S8903	.SEAT,VALVE ,INSERT,EXH,0.010 IN (.26MM) OS.......................... UOC:V53	8
32	PAFZZ	11083	3B0645	.PLUG,EXPANSION...................... UOC:V53	6
33	PAFZZ	11083	4N7253	GASKET.............................. UOC:V53	8

END OF FIGURE

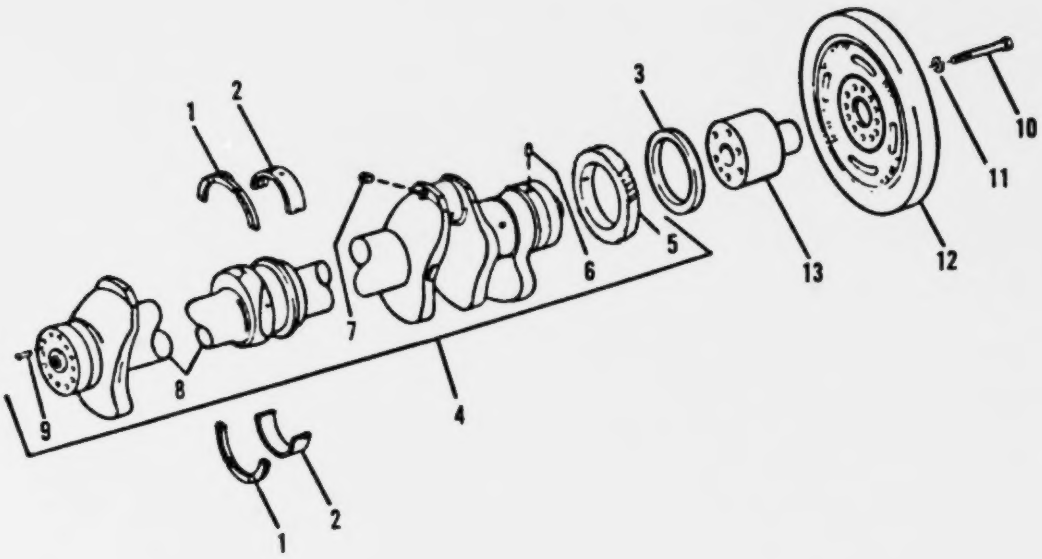

FIGURE 6. CRANKSHAFT AND DAMPER ASSEMBLY

(1) ITEM NO	(2) SMR CODE	(3) CAGEC	(4) PART NUMBER	(5) DESCRIPTION AND USABLE ON CODES(UOC)	(6) QTY
				GROUP 0102: CRANKSHAFT	
				FIG. 6 CRANKSHAFT AND DAMPER ASSEMBLY	
1	PAHZZ	11083	1W5252	BEARING,WASHER,THRU.................. UOC:V53	2
2	PAHZZ	11083	6N8743	BEARING............................. UOC:V53	5
2	PAHZZ	11083	8N5422	BEARING SET,SLEEVE.................. UOC:V53	5
2	PAHZZ	11083	8N5425	BEARING SET,SLEEVE.................. UOC:V53	5
2	XDHZZ	11083	8N5423	BEARING,SLEEVE...................... UOC:V53	5
2	PAHZZ	11083	8N5424	BEARING HALF SET,SL................. UOC:V53	5
3	PAHZZ	11083	2W1733	SEAL,PLAIN ENCASED.................. UOC:V53	2
4	PBHZZ	11083	7N3407	CRANKSHAFT,ENGINE................... UOC:V53	1
5	PBHZZ	11083	4N0418	.GEAR............................... UOC:V53	1
6	PAHZZ	60380	C-1314-C	.ROLLER,BEARING..................... UOC:V53	1
7	PAHZZ	09367	0917673-6	.PLUG,PIPE.......................... UOC:V53	5
8	XAHZZ	11083	7N3408	.CRANKSHAFT......................... UOC:V53	1
9	PAHZZ	11083	4N0684	.PIN................................ UOC:V53	1
10	PAOZZ	96906	MS90727-175	SCREW,CAP,HEXAGON H................. UOC:V53	6
11	PAOZZ	11083	4D3704	WASHER,FLAT......................... UOC:V53	6
12	PBOZZ	11083	2P5149	DAMPER ASSEMBLY..................... UOC:V53	1
13	PBOZZ	11083	4N2109	ADAPTER............................. UOC:V53	1

END OF FIGURE

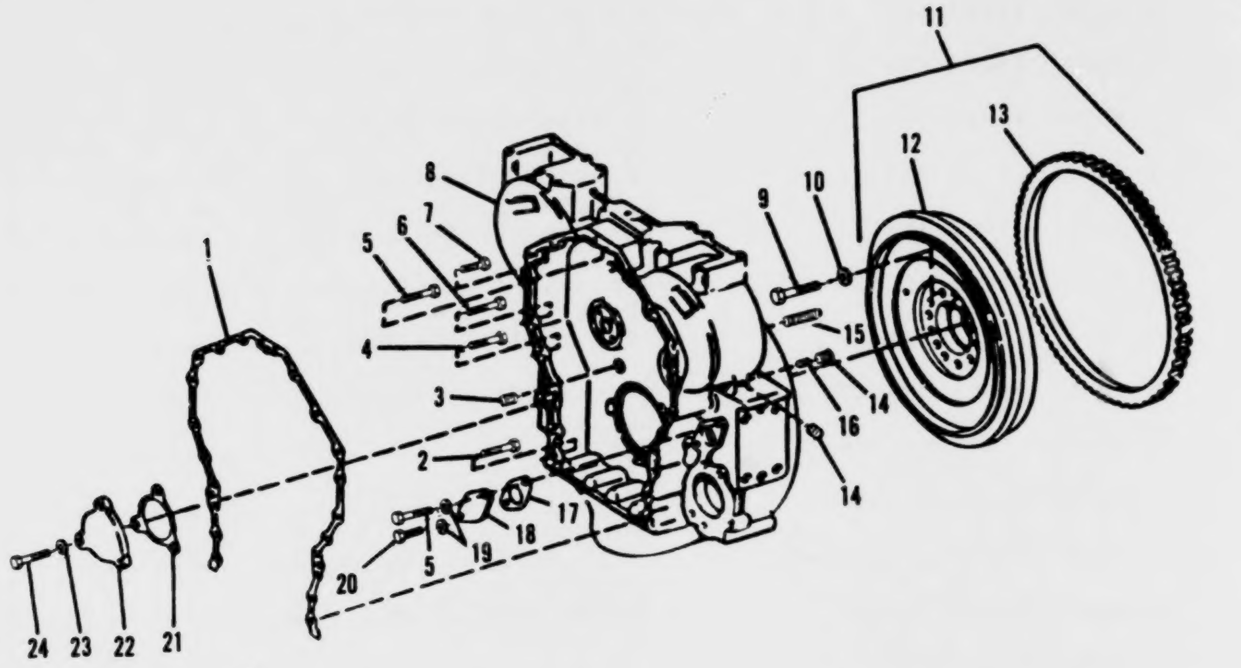

FIGURE 7. FLYWHEEL HOUSING ASSEMBLY

GROUP 0103: FLYWHEEL ASSEMBLY

FIG. 7 FLYWHEEL HOUSING ASSEMBLY

(1) ITEM NO	(2) SMR CODE	(3) CAGEC	(4) PART NUMBER	(5) DESCRIPTION AND USABLE ON CODES(UOC)	(6) QTY
1	PAFZZ	11083	8N1911	GASKET............................ UOC:V53	1
2	PAFZZ	11083	2H6488	BOLT.............................. UOC:V53	8
3	PAFZZ	11083	3B0551	PLUG,PIPE......................... UOC:V53	1
4	PAFZZ	58312	1A5964-00	SCREW,CAP,HEXAGON H............... UOC:V53	2
5	PAFZZ	11083	0S1619	BOLT,MACHINE...................... UOC:V53	5
6	PAFZZ	96906	MS90728-75	SCREW,CAP,HEXAGON H............... UOC:V53	2
7	PAFZZ	11083	0S1588	BOLT.............................. UOC:V53	6
8	XDFFF	11083	7N9571	HOUSING,FLYWHEEL.................. UOC:V53	1
9	PAFZZ	96906	MS90727-175	SCREW,CAP,HEXAGON H............... UOC:V53	12
10	PAFZZ	11083	4D3704	WASHER,FLAT....................... UOC:V53	12
11	XDFHH	11083	4N1070	FLYWHEEL ASSY..................... UOC:V53	1
12	XAHZZ	11083	4N1071	.FLYWHEEL......................... UOC:V53	1
13	PBHZZ	11083	4N2514	.GEAR............................. UOC:V53	1
14	PAFZZ	26953	A8069-006	PLUG,PIPE......................... UOC:V53	4
15	PAFZZ	11083	3D2871	STUD.............................. UOC:V53	2
16	PAFZZ	11083	3S0036	PLUG.............................. UOC:V53	2
17	PAFZZ	11083	4N0933	GASKET PART OF KIT P/N 5R4553....... UOC:V53	2
18	PBFZZ	11083	2P2772	COVER,HOUSING..................... UOC:V53	2
19	PAFZZ	11083	5M2894	WASHER,FLAT....................... UOC:V53	4
20	PAFZZ	11083	1A2029	BOLT,MACHINE...................... UOC:V53	2
21	PAFZZ	11083	4M6853	GASKET PART OF KIT P/N 5R4553....... UOC:V53	1
22	PAFZZ	11083	4N1114	COVER,HOUSING..................... UOC:V53	1
23	PAFZZ	11083	4D3704	WASHER,FLAT....................... UOC:V53	3
24	PAFZZ	96906	MS90728-163	SCREW,CAP,HEXAGON H............... UOC:V53	3

END OF FIGURE

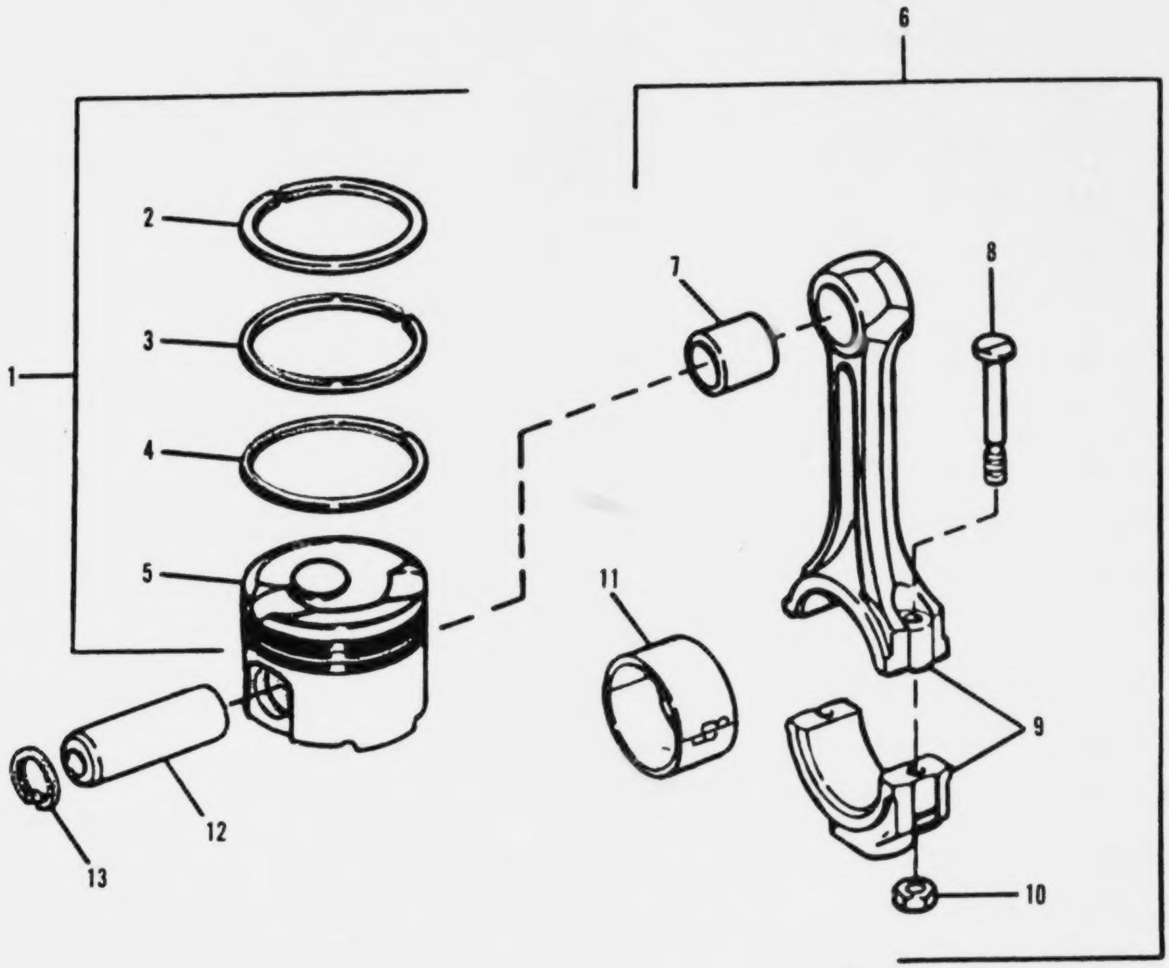

FIGURE 8. PISTON AND CONNECTING ROD ASSEMBLY

(1) ITEM NO	(2) SMR CODE	(3) CAGEC	(4) PART NUMBER	(5) DESCRIPTION AND USABLE ON CODES(UOC)	(6) QTY
				GROUP 0104: PISTONS, CONNECTING RODS	
				FIG. 8 PISTON AND CONNECTING ROD ASSEMBLY	
1	XDHHH	11083	8N1496	PISTON GRP,BASIC........................ UOC:V53	8
2	PAHZZ	75414	8N502	.RING,PISTON........................ UOC:V53	1
3	PAHZZ	11083	2P2817	.RING,PISTON........................ UOC:V53	1
4	PAHZZ	75370	7N7078	.RING,PISTON........................ UOC:V53	1
5	XAHZZ	11083	8N1607	.BODY ASSY,PISTON.................. UOC:V53	1
6	XDHHH	11083	8N1728	ROD ASSY,CONNECTING................ UOC:V53	1
7	PAHZZ	11083	8N2018	BEARING,SLEEVE..................... UOC:V53	1
8	XDHZZ	11083	6N8942	.BOLT.............................. UOC:V53	2
9	XAHZZ	11083	8N1729	.CONNECTING ROD.................... UOC:V53	1
10	PAHZZ	11083	8L3441	.NUT............................... UOC:V53	2
11	XDHZZ	11083	6N7436	BEARING,CONN ROD................... UOC:V53	1
12	PAHZZ	11083	8N1608	PIN,PISTON......................... UOC:V53	1
13	PAHZZ	96906	MS16625-1200	RING,RETAINING..................... UOC:V53	2

END OF FIGURE

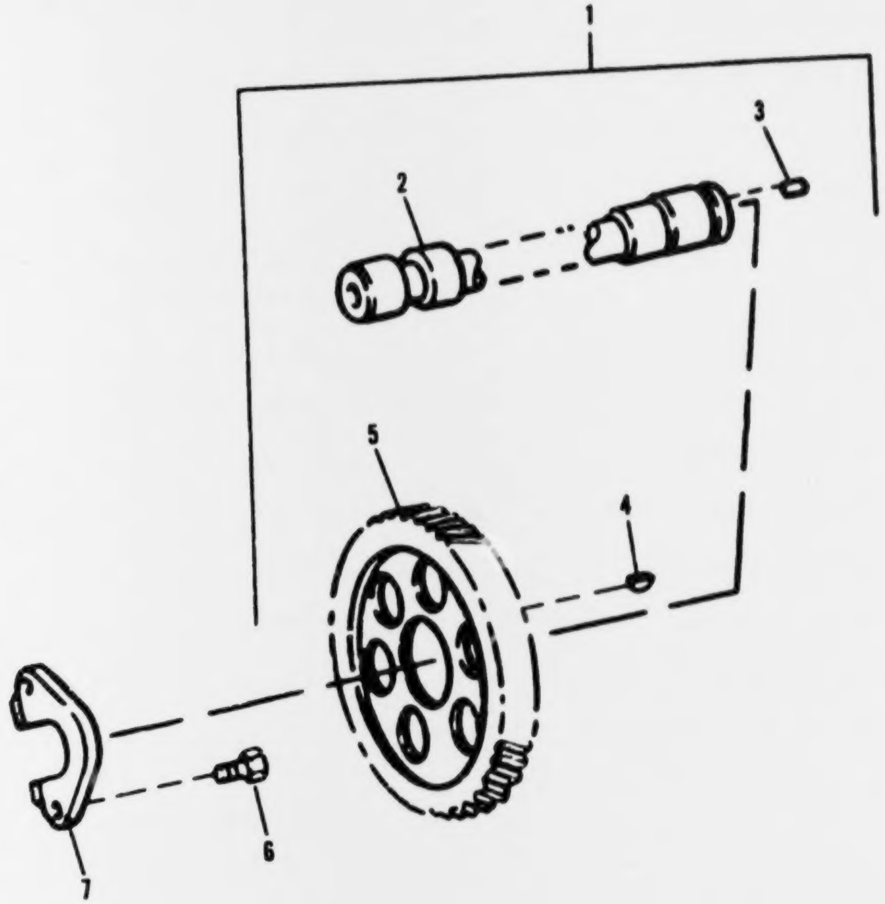

FIGURE 9. CAMSHAFT ASSEMBLY

(1) ITEM NO	(2) SMR CODE	(3) CAGEC	(4) PART NUMBER	(5) DESCRIPTION AND USABLE ON CODES(UOC)	(6) QTY
				GROUP 0105: CAMSHAFTS	
				FIG 9 CAMSHAFT ASSEMBLY	
1	XDFFH	11083	6N5673	CAMSHAFT ASSY........................ UOC:V53	1
2	XDHZZ	11083	6N5674	.CAMSHAFT........................... UOC:V53	1
3	XDHZZ	80657	11BAC11636	.PIN,STR,HDLS....................... UOC:V53	1
4	PAHZZ	96906	MS35756-9	.KEY,WOODRUFF....................... UOC:V53	1
5	XAHZZ	11083	7N8345	.GEAR,CAMSHAFT,FR................... UOC:V53	1
6	PAHZZ	96906	MS18154-58	SCREW,CAP,HEXAGON H................. UOC:V53	2
7	PFHZZ	11083	4N0342	BRACKET,EYE,ROTATIN................. UOC:V53	1

END OF FIGURE

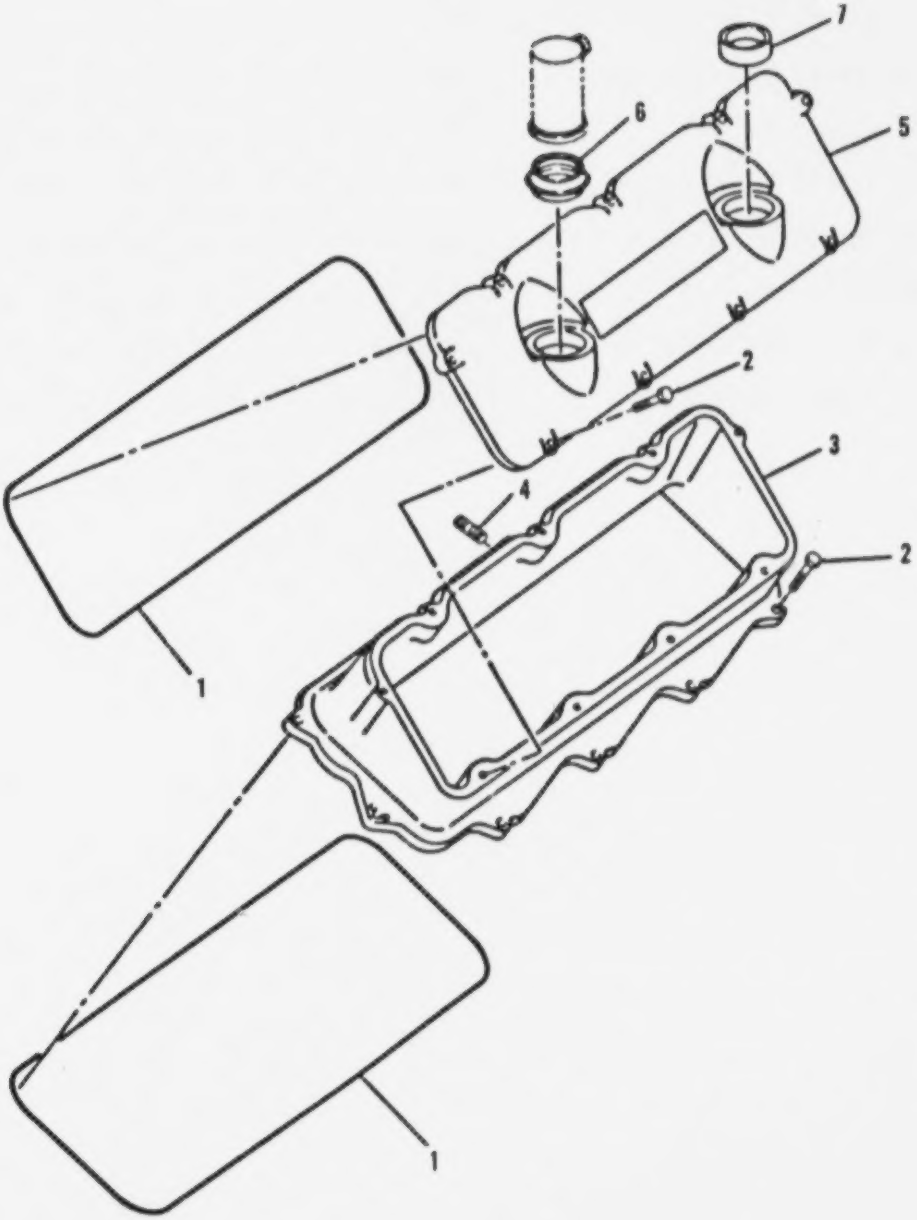

FIGURE 10. VALVE COVERS (LEFT-AND RIGHT-HAND)

(1) ITEM NO	(2) SMR CODE	(3) CAGEC	(4) PART NUMBER	(5) DESCRIPTION AND USABLE ON CODES(UOC)	(6) QTY
				GROUP 0105: VALVES	
				FIG. 10 VALVE COVERS (LEFT AND RIGHT -HAND)	
1	PFCZZ	11083	5P5678	SEAL,PACKING PART OF KIT P/N 5R4553 PART OF KIT P/N 5P9843............... UOC:V53	2
2	PAOZZ	11083	9L8925	BOLT,MACHINE......................... UOC:V53	40
3	XBOZZ	11083	6N2522	BASE,ROCKER ARM COV.................. UOC:V53	2
4	PAOZZ	11083	7M1599	STUD,PLAIN........................... UOC:V53	8
5	XBOZZ	11083	6N2438	COVER,ROCKER ARM..................... UOC:V53	2
6	PFCZZ	11083	4N0851	ADAPTER TUBE,MANIFC.................. UOC:V53	2
7	PAOZZ	11083	4N4957	PLUG................................. UOC:V53	2

END OF FIGURE

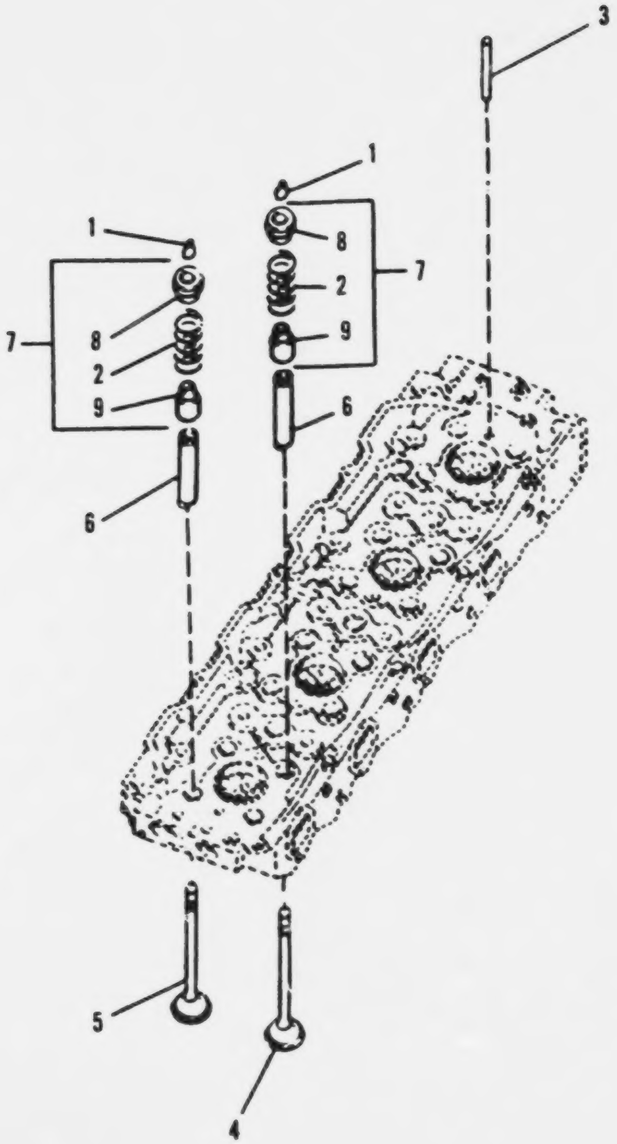

FIGURE 11. VALVE ASSEMBLIES

(1) ITEM NO	(2) SMR CODE	(3) CAGEC	(4) PART NUMBER	(5) DESCRIPTION AND USABLE ON CODES(UOC)	(6) QTY
				GROUP 0105: VALVES	
				FIG. 11 VALVE ASSEMBLIES	
1	PAFZZ	11083	2A4429	LOCK,VALVE SPRING R.................. UOC:V53	32
2	PAFZZ	11083	4N5906	SPRING,VALVE.......................... UOC:V53	16
3	PAFZZ	11083	2N5775	DOWEL................................. UOC:V53	8
4	PAFZZ	11083	4N5654	VALVE,POPPET,ENGINE.................. UOC:V53	8
5	PAFZZ	11083	7N4580	VALVE,EXHAUST......................... UOC:V53	8
6	PAFZZ	11083	4N2803	GUIDE,VALVE........................... UOC:V53	16
7	XDFFF	71785	RO623-99	ROTOCOIL ASSY......................... UOC:V53	16
8	XDFZZ	71785	RO622-99	.ROTOCOIL............................. UOC:V53	1
9	PAFZZ	11083	6N7174	.SEAL,VALVE GUIDE..................... UOC:V53	1

END OF FIGURE

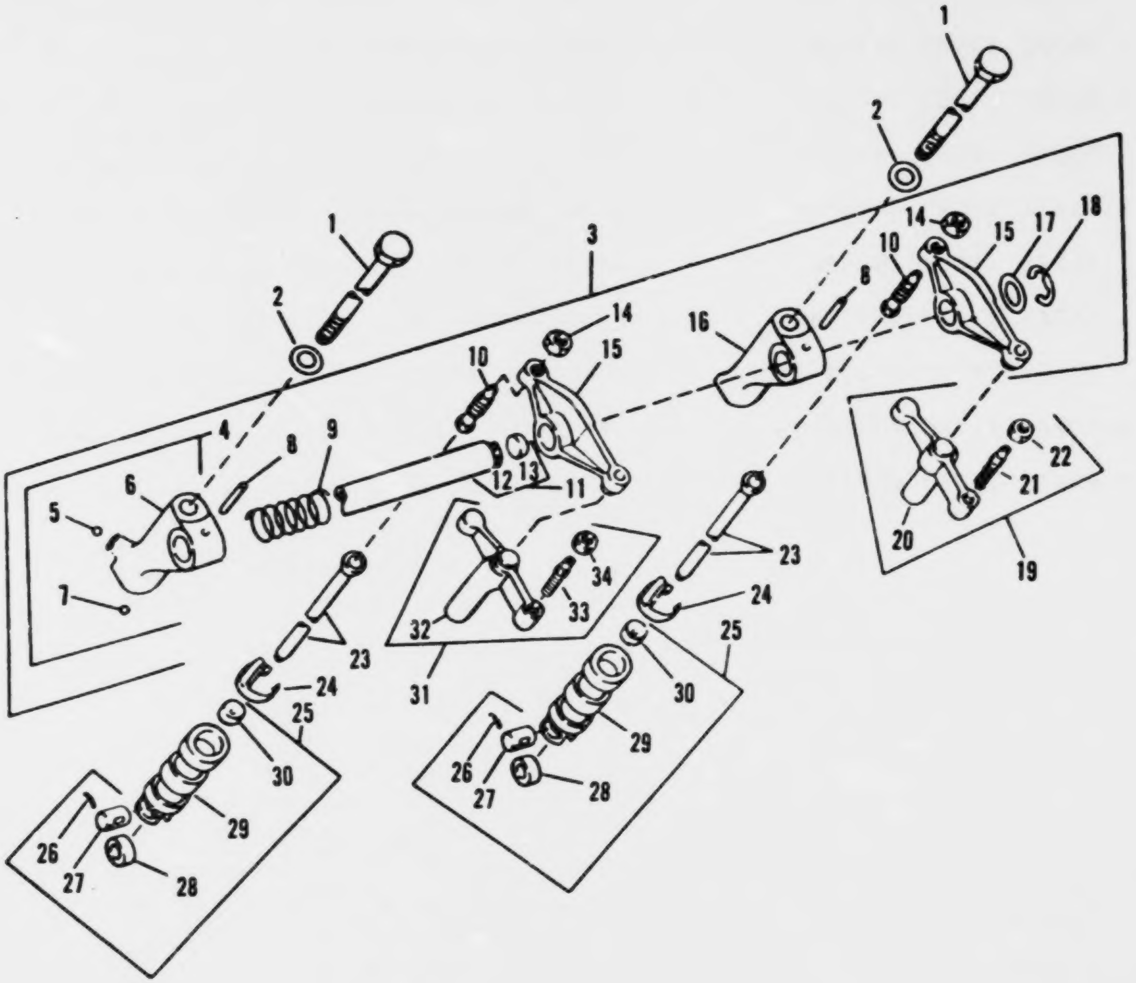

FIGURE 12. VALVE MECHANISM ASSEMBLY

(1) ITEM NO	(2) SMR CODE	(3) CAGEC	(4) PART NUMBER	(5) DESCRIPTION AND USABLE ON CODES(UOC)	(6) QTY
				GROUP 0105: VALVES	
				FIG. 12 VALVE MECHANISM ASSEMBLY	
1	PAFZZ	11083	2P9845	BOLT.............................. UOC:V53	8
2	PAFZZ	11083	1F9233	WASHER,FLAT....................... UOC:V53	8
3	XDFFF	11083	4N1718	ARM GRP,ROCKER.................... UOC:V53	2
4	XDFFF	11083	7N0839	.BRACKET ASSY..................... UOC:V53	1
5	PFFZZ	11083	2D6642	..BALL,BEARING.................... UOC:V53	1
6	XDFZZ	11083	7N0838	..BRACKET,ROCKER ARMS............. UOC:V53	1
7	PFFZZ	11083	4B9880	..BALL,BEARING.................... UOC:V53	1
8	XDFZZ	80657	118A011636	.PIN,STR,HDLS..................... UOC:V53	2
9	PFFZZ	11083	2N7229	.SPRING,ROCKER ARM................ UOC:V53	3
10	PAFZZ	11083	1A2935	.SCREW,ADJUSTING,ROC.............. UOC:V53	8
11	XDFFF	11083	4N1106	.SHAFT ASSY,ROCKER................ UOC:V53	1
12	XAFZZ	11083	4N1107	..SHAFT,ROCKER ARM................ UOC:V53	1
13	PAFZZ	11083	5B1866	..PLUG,EXPANSION.................. UOC:V53	2
14	PAFZZ	11083	9L7712	.NUT,PLAIN,HEXAGON................ UOC:V53	8
15	PBFZZ	11083	4N5614	.ROCKER ARM,ENGINE P.............. UOC:V53	8
16	PAFZZ	11083	7N1198	.BRACKET.......................... UOC:V53	3
17	PAFZZ	11083	2N7228	.WASHER........................... UOC:V53	4
18	PAFZZ	79136	X5133-98MD	.RING,RETAINING................... UOC:V53	2
19	PFFZZ	11083	4N5612	.BRIDGE........................... UOC:V53	8
20	PAFZZ	11083	4N5612	..BRIDGE.......................... UOC:V53	1
21	PFFZZ	11083	2N5842	..SCREW........................... UOC:V53	1
22	PFFZZ	11083	9L7712	..NUT,PLAIN,HEXAGON............... UOC:V53	1
23	PAFZZ	11083	4N5609	.ROD.............................. UOC:V53	16
24	PAFZZ	11083	6N6872	.SPRING,LIFTER.................... UOC:V53	16

(1) ITEM NO	(2) SMR CODE	(3) CAGEC	(4) PART NUMBER	(5) DESCRIPTION AND USABLE ON CODES(UOC)	(6) QTY
25	PAFZZ	11083	4N2475	.TAPPET,ENG POPPET................. UOC:V53	16
26	XAFZZ	11083	4N6232	..CLIP,RETAINING.................... UOC:V53	1
27	XAFZZ	11083	4N6181	..PIN............................... UOC:V53	1
28	XAFZZ	11083	4N5928	..ROLLER............................ UOC:V53	1
29	XAFZZ	11083	6N4588	..BODY.............................. UOC:V53	1
30	XAFZZ	11083	6N4587	..INSERT............................ UOC:V53	1
31	PFFZZ	11083	4N5611	.BRIDGE............................. UOC:V53	8
32	PAFZZ	11083	4N5610	..BRIDGE............................ UOC:V53	1
33	PFFZZ	11083	2N5842	..SCREW............................. UOC:V53	1
34	PFFZZ	11083	9L7712	..NUT,PLAIN,HEXAGON................. UOC:V53	1

END OF FIGURE

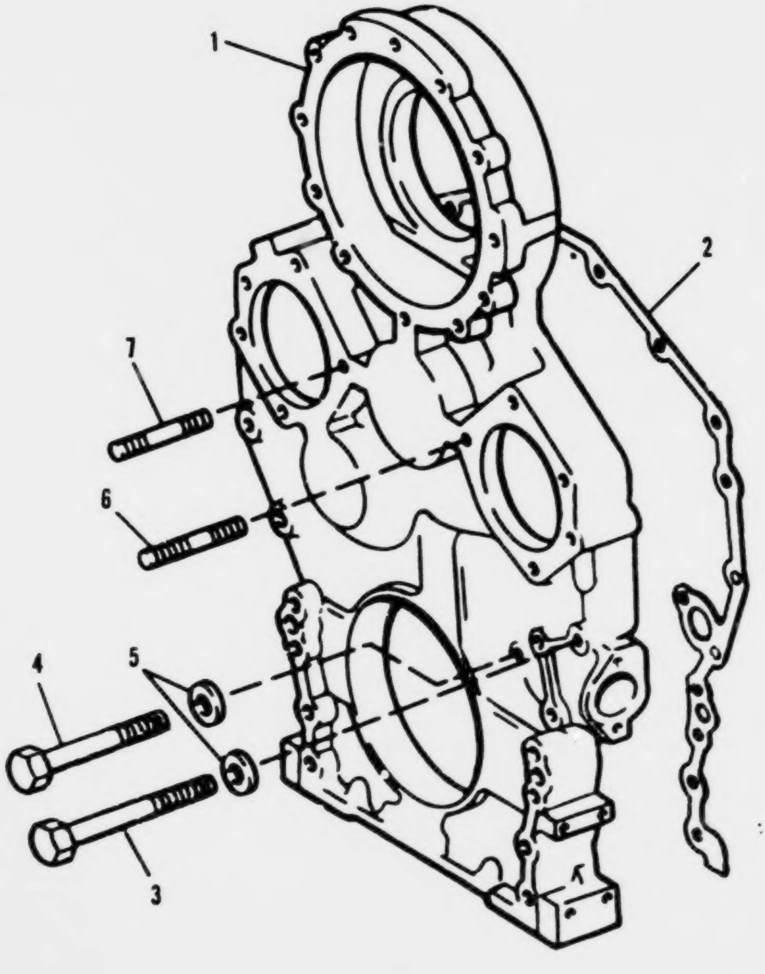

FIGURE 13. TIMING GEAR HOUSING ASSEMBLY

(1) ITEM NO	(2) SMR CODE	(3) CAGEC	(4) PART NUMBER	(5) DESCRIPTION AND USABLE ON CODES(UOC)	(6) QTY
				GROUP 0105: TIMING SYSTEM	
				FIG. 13 TIMING GEAR HOUSING ASSEMBLY	
1	XDFZZ	11083	6N7142	HOUSING,TMG GEAR.................... UOC:V53	1
2	XDFZZ	11083	4N1625	GASKET,CYL BLK...................... UOC:V53	1
3	PAFZZ	11083	L1352	BOLT,MACHINE........................ UOC:V53	2
4	PAFZZ	11083	L1143	BOLT,MACHINE........................ UOC:V53	3
5	PAFZZ	11083	5M2894	WASHER,FLAT......................... UOC:V53	5
6	PAFZZ	11083	3K3256	STUD................................ UOC:V53	1
7	PAFZZ	11083	6F7C12	STUD,PLAIN.......................... UOC:V53	1

END OF FIGURE

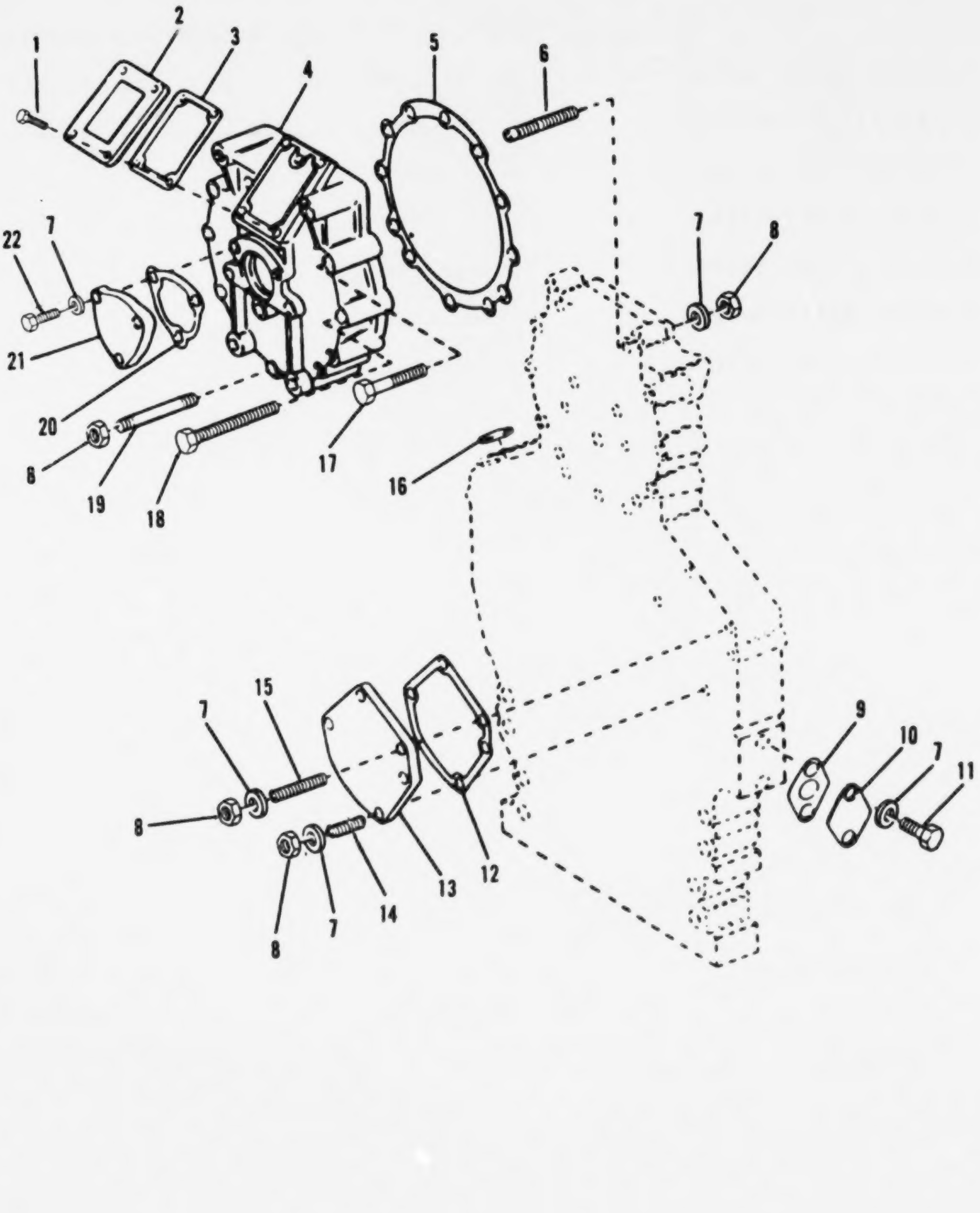

FIGURE 14 TIMING GEAR HOUSING COVERS

(1) ITEM NO	(2) SMR CODE	(3) CAGEC	(4) PART NUMBER	(5) DESCRIPTION AND USABLE ON CODES(UOC)	(6) QTY
				GROUP 0105: TIMING SYSTEM	
				FIG. 14 TIMING GEAR HOUSING COVERS	
1	PAFZZ	11083	0L1351	BOLT,MACHINE........................ UOC:V53	4
2	XBFZZ	11083	6N2327	COVER.............................. UOC:V53	1
3	PAFZZ	11083	2N8630	GASKET PART OF KIT P/N 5R4553....... UOC:V53	1
4	XBFZZ	11083	4N1985	COVER.............................. UOC:V53	1
5	PAFZZ	11083	4N1998	GASKET PART OF KIT P/N 5R4553....... UOC:V53	1
6	PAFZZ	11083	3M0496	STUD,PLAIN......................... UOC:V53	1
7	PAFZZ	11083	5M2894	WASHER,FLAT........................ UOC:V53	11
8	PAFZZ	15564	1377A	NUT,PLAIN,HEXAGON.................. UOC:V53	6
9	PAFZZ	11083	4N0933	GASKET PART OF KIT P/N 5R4553....... UOC:V53	1
10	PAFZZ	11083	2P2772	COVER,HOUSING...................... UOC:V53	1
11	PAFZZ	11083	1A2029	BOLT,MACHINE....................... UOC:V53	2
12	PAFZZ	11083	4N1722	GASKET PART OF KIT P/N 5R4553 PART OF KIT P/N 6V220................... UOC:V53	1
13	XBFZZ	11083	4N1721	COVER.............................. UOC:V53	1
14	PAFZZ	11083	6F7012	STUD,PLAIN......................... UOC:V53	1
15	PAFZZ	11083	2P1974	STUD............................... UOC:V53	3
16	PAFZZ	11083	4N8478	CAP,PROTECTIVE,DUST................ UOC:V53	1
17	PAFZZ	11083	L1352	BOLT,MACHINE....................... UOC:V53	6
18	PAFZZ	11083	5F4899	BOLT,MACHINE....................... UOC:V53	4
19	PAFZZ	11083	4F9081	STUD,PLAIN......................... UOC:V53	1
20	PAFZZ	11083	6N2508	GASKET PART OF KIT P/N 5R4553....... UOC:V53	1
21	XBFZZ	11083	6N2509	COVER.............................. UOC:V53	1
22	PAFZZ	11083	0S1594	BOLT,MACHINE....................... UOC:V53	3

END OF FIGURE

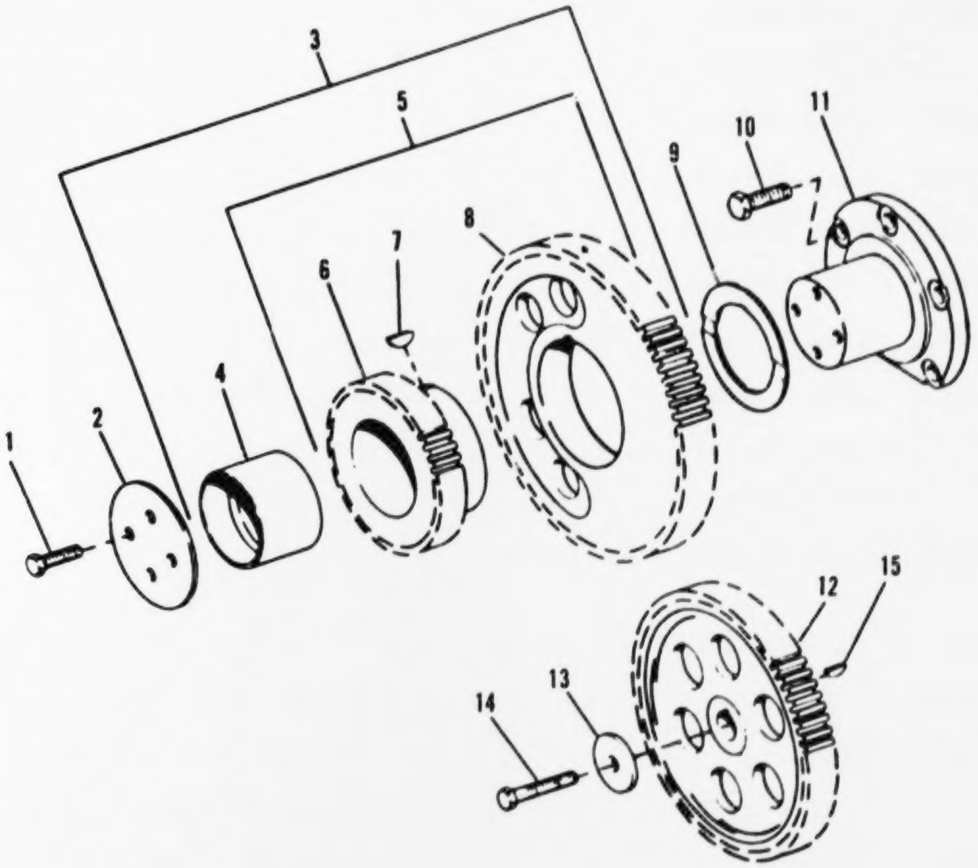

FIGURE 15. TIMING GEAR ASSEMBLY

(1) ITEM NO	(2) SMR CODE	(3) CAGEC	(4) PART NUMBER	(5) DESCRIPTION AND USABLE ON CODES(UOC)	(6) QTY
				GROUP 0105: TIMING SYSTEM	
				FIG. 15 TIMING GEAR ASSEMBLY	
1	PAFZZ	96906	MS90728-33	BOLT,MACHINE........................ UOC:V53	4
2	XBFZZ	11083	4N0758	PLATE,RETAINING,SHA................. UOC:V53	1
3	XBFZZ	11083	7N2485	GEAR ASSY,IDL&BAL................... UOC:V53	1
4	PAHZZ	11083	7N2483	.BEARING,SLEEVE..................... UOC:V53	1
5	XBFFF	11083	7N2489	.GEAR,ASSY.......................... UOC:V53	1
6	XBFZZ	11083	7N2486	..GEAR.............................. UOC:V53	1
7	PAFZZ	96906	MS35756-9	..KEY,WOODRUFF...................... UOC:V53	1
8	XBFZZ	11083	4N0868	..GEAR,IDL.......................... UOC:V53	1
9	PAFZZ	11083	7N2443	WASHER,THRUST....................... UOC:V53	1
10	PAFZZ	11083	0L1351	BOLT,MACHINE........................ UOC:V53	5
11	XBFZZ	11083	7N2484	SHAFT,IDLER......................... UOC:V53	1
12	PFFZZ	11083	9N2475	GEAR,SPUR........................... UOC:V53	1
13	PAFZZ	11083	1P7346	WASHER.............................. UOC:V53	1
14	PAFZZ	11083	0S1571	BOLT................................ UOC:V53	1
15	PAFZZ	96906	MS35756-9	KEY,WOODRUFF........................ UOC:V53	1

END OF FIGURE

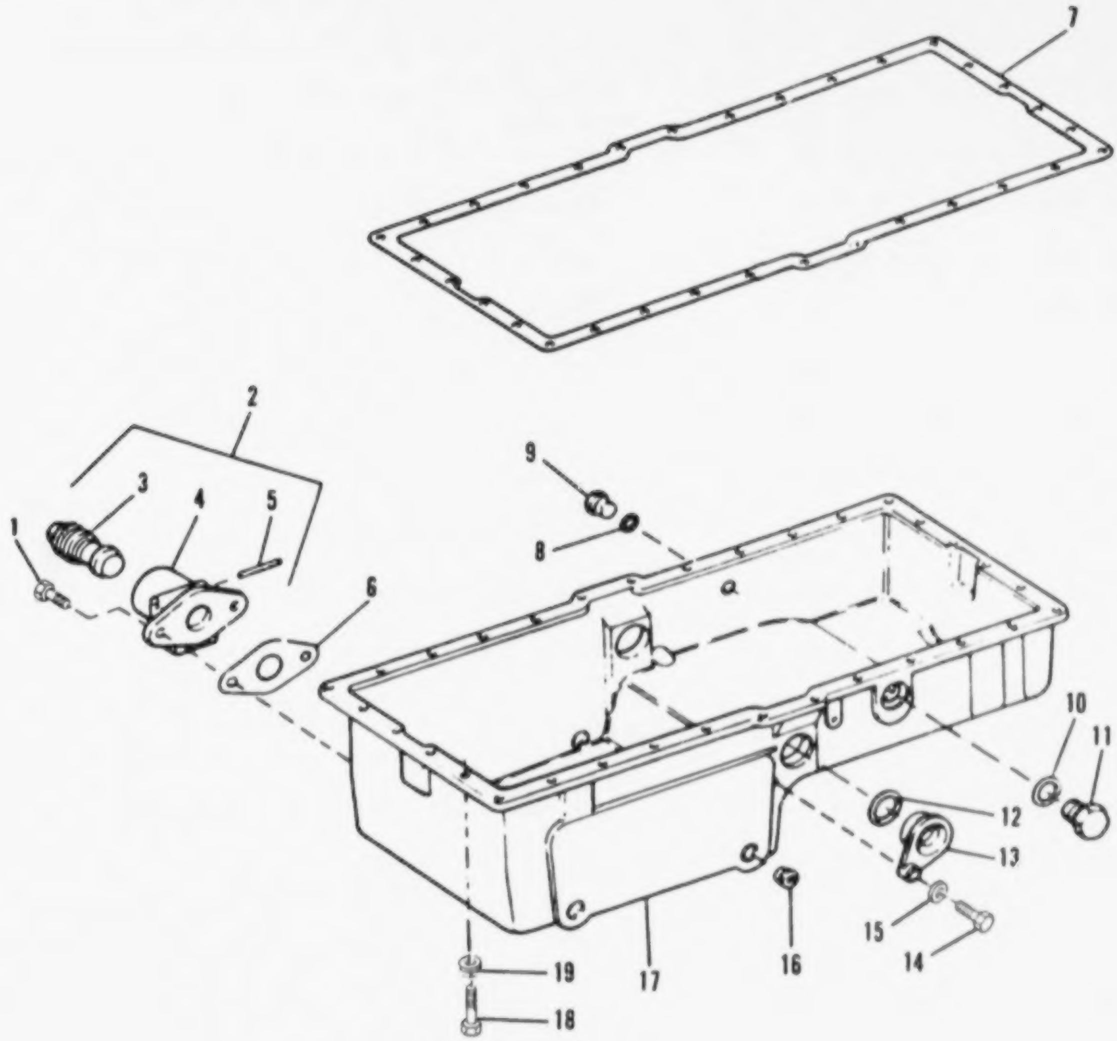

FIGURE 16. OIL PAN ASSEMBLY

(1) ITEM NO	(2) SMR CODE	(3) CAGEC	(4) PART NUMBER	(5) DESCRIPTION AND USABLE ON CODES(UOC)	(6) QTY
				GROUP 0106: ENGINE LUBRICATION SYSTEM	
				FIG. 16 OIL PAN ASSEMBLY	
1	PAFZZ	11083	S1587	BOLT,MACHINE........................... UOC:V53	2
2	PFFZZ	11083	9S9994	ADAPTER ASSEMBLY,OI................ UOC:V53	1
3	PAFZZ	11083	5M2669	.PLUG,MACHINE THREAD............... UOC:V53	1
4	PFFZZ	11083	9S9993	.ADAPTER.............................. UOC:V53	1
5	PAFZZ	11083	9H6687	.PIN.................................. UOC:V53	1
6	PAFZZ	11083	2M9189	GASKET PART OF KIT P/N 5R4553....... UOC:V53	1
7	PAFZZ	11083	4N1151	GASKET................................ UOC:V53	1
8	PAFZZ	11083	7M8485	SEAL,ADAPTER,MOTOR PART OF KIT P/N 5R4553.............................. UOC:V53	1
9	PAFZZ	11083	9S4185	PLUG,MACHINE THREAD................. UOC:V53	1
10	PAFZZ	81349	M83248-2-908	PACKING,PREFORMED PART OF KIT P/N 5R4553 PART OF KIT P/N 6V236........ UOC:V53	1
11	PAFZZ	11083	9S4181	PLUG,MACHINE THREAD................. UOC:V53	1
12	PAFZZ	11083	9M9647	PACKING,PREFORMED PART OF KIT P/N 5R4553 PART OF KIT P/N 5P9843 PART OF KIT P/N 6V220.................. UOC:V53	2
13	PAFZZ	11083	4N9968	CAP-PLUG,PROTECTIVE................. UOC:V53	2
14	PAFZZ	11083	0S1588	BOLT.................................. UOC:V53	2
15	PAFZZ	11083	5M2894	WASHER,FLAT.......................... UOC:V53	2
16	PAFZZ	11083	3B0551	PLUG,PIPE............................ UOC:V53	3
17	PAFZZ	11083	6N9055	OIL PAN............................... UOC:V53	1
18	PAFZZ	11083	0S1588	BOLT.................................. UOC:V53	32
19	PAFZZ	11083	5M2894	WASHER,FLAT.......................... UOC:V53	32

END OF FIGURE

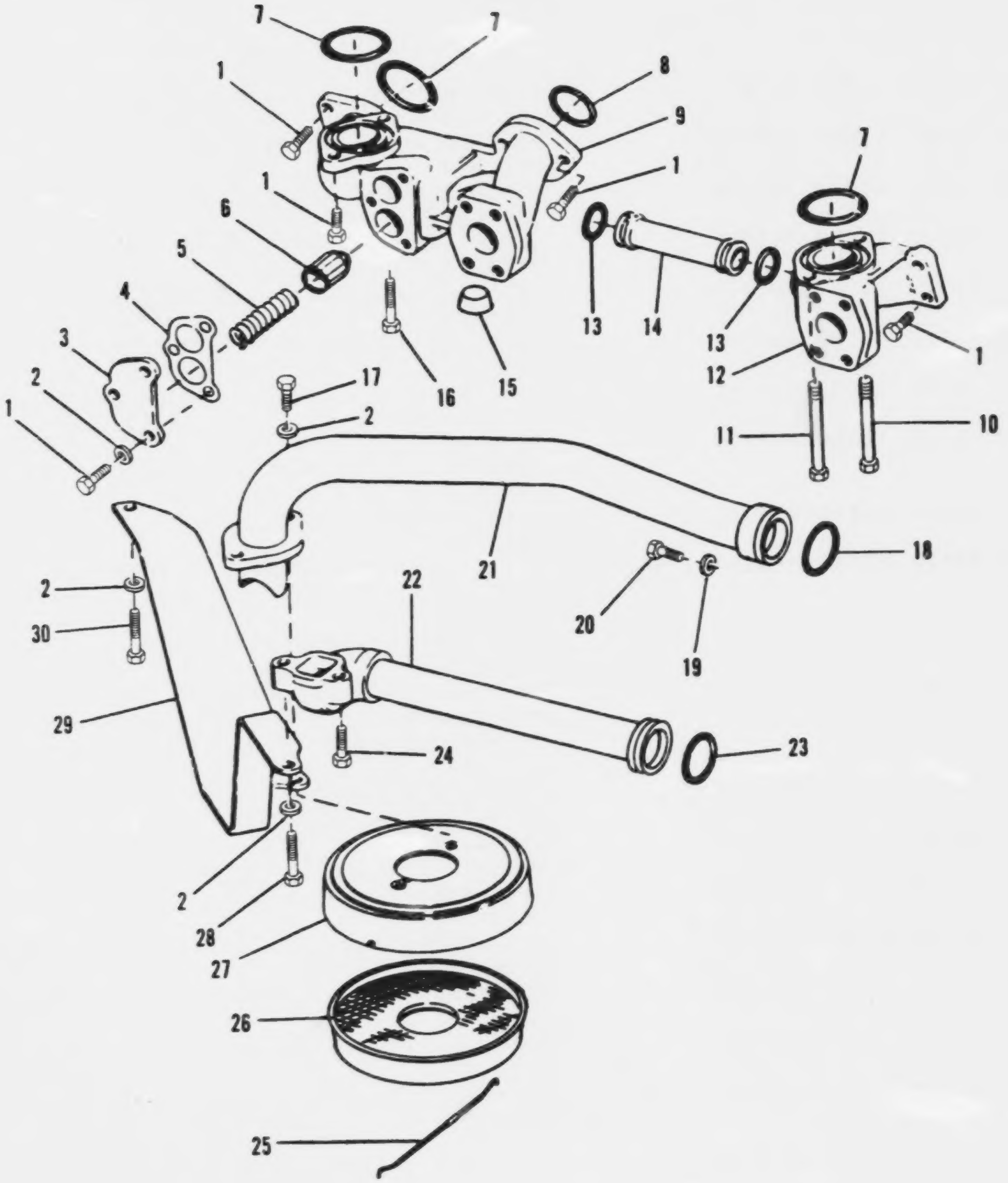

FIGURE 17. ENGINE OIL SUCTION LINES

(1) ITEM NO	(2) SMR CODE	(3) CAGEC	(4) PART NUMBER	(5) DESCRIPTION AND USABLE ON CODES(UOC)	(6) QTY
				GROUP 0106: ENGINE LUBRICATION SYSTEM	
				FIG 17. ENGINE OIL SUCTION LINES	
1	PAFZZ	11083	0S1594	BOLT,MACHINE........................ UOC:V53	10
2	PAFZZ	11083	5M2894	WASHER,FLAT......................... UOC:V53	5
3	XBFZZ	11083	4N0861	COVER............................... UOC:V53	1
4	PAFZZ	11083	4N865	GASKET PART OF KIT P/N 5R4553 PART OF KIT P/N 6V236.................. UOC:V53	1
5	PFFZZ	11083	4N8150	SPRING.............................. UOC:V53	2
6	PFFZZ	11083	1P1367	PLUNGER,DETENT...................... UOC:V53	2
7	PAFZZ	11083	6L1651	PACKING,PREFORMED PART OF KIT P/N 5R4553 PART OF KIT P/N 6V236........ UOC:V53	3
8	PAFZZ	11083	9M7002	PACKING,PREFORMED PART OF KIT P/N 5R4553 PART OF KIT P/N 6V236........ UOC:V53	1
9	XBFZZ	11083	4N8647	BODY,FILTER & CLR................... UOC:V53	1
10	PAFZZ	11083	S1608	BOLT,MACHINE........................ UOC:V53	1
11	PAFZZ	11083	T65	BOLT,MACHINE........................ UOC:V53	1
12	XBFZZ	11083	4N8770	ELBOW,OIL CLR OUT................... UOC:V53	1
13	PAFZZ	11083	9M4849	SEAL,RING PART OF KIT P/N 5R4553 PART OF KIT P/N 5P9843.............. UOC:V53	2
14	XBFZZ	11083	4N6410	TUBE,CLR BYP........................ UOC:V53	1
15	PAFZZ	11083	1B5174	PLUG,PIPE........................... UOC:V53	1
16	PAFZZ	11083	L2070	BOLT,MACHINE........................ UOC:V53	1
17	PAFZZ	11083	0S1588	BOLT................................ UOC:V53	2
18	PAFZZ	11083	9M9647	PACKING,PREFORMED PART OF KIT P/N 5R4553 PART OF KIT P/N 5P9843....... UOC:V53	1
19	PAFZZ	11083	8M9024	WASHER,FLAT......................... UOC:V53	1
20	PAFZZ	11083	0L1351	BOLT,MACHINE........................ UOC:V53	1
21	XDFZZ	11083	4N9372	TUBE ASSY,OIL PUMP.................. UOC:V53	1

(1) ITEM NO	(2) SMR CODE	(3) CAGEC	(4) PART NUMBER	(5) DESCRIPTION AND USABLE ON CODES(UOC)	(6) QTY
22	XDFZZ	11083	4N1413	TUBE ASSY,OIL PUMP.................. UOC:V53	1
23	PAFZZ	11083	5L2727	SEAL PART OF KIT P/N 5R4553.......... UOC:V53	1
24	PAFZZ	11083	0S1591	SCREW................................ UOC:V53	1
25	PAFZZ	11083	4N0914	CLIP................................. UOC:V53	1
26	PBFZZ	11083	4N0913	SCREEN............................... UOC:V53	1
27	PAFZZ	11083	8N2104	BELL ASSEMBLY........................ UOC:V53	1
28	PAFZZ	11083	0S1571	BOLT................................. UOC:V53	1
29	XDFZZ	11083	6N6143	SUPPORT,SUCT LINE.................... UOC:V53	1
30	PAFZZ	96906	MS90728-63	SCREW,CAP,HEXAGON H.................. UOC:V53	1

END OF FIGURE

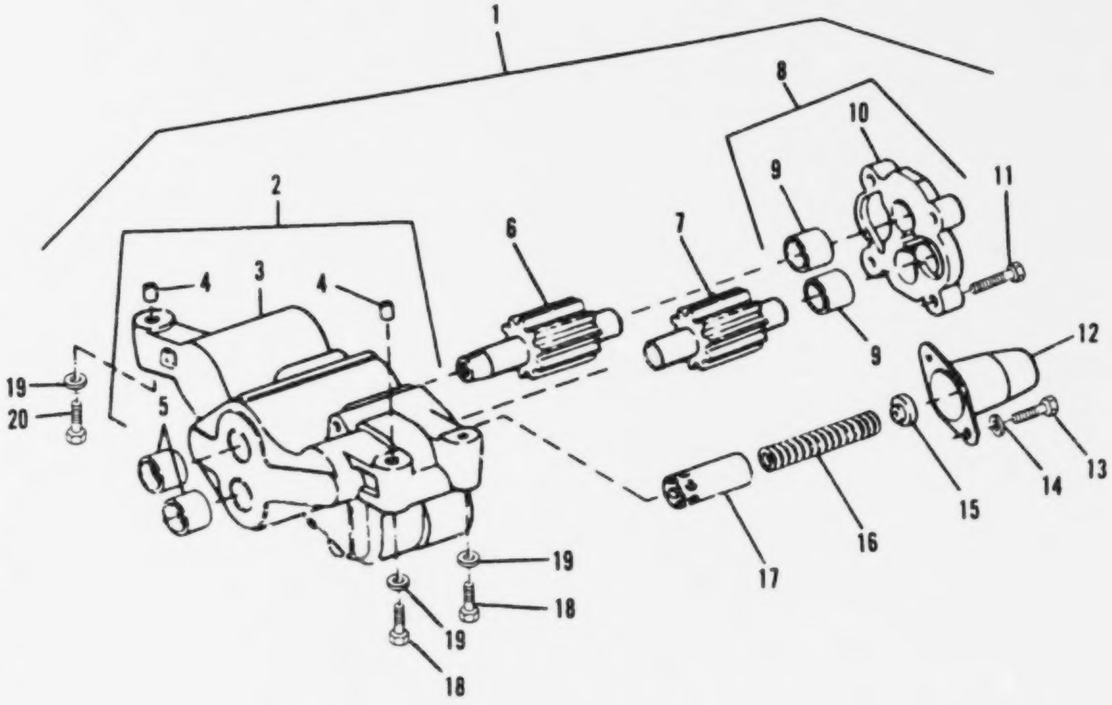

FIGURE 18. ENGINE OIL PUMP

(1) ITEM NO	(2) SMR CODE	(3) CAGEC	(4) PART NUMBER	(5) DESCRIPTION AND USABLE ON CODES(UOC)	(6) QTY
				GROUP 0106: ENGINE LUBRICATION SYSTEM	
				FIG. 18 ENGINE OIL PUMP	
1	XDFHH	11083	4N8734	PUMP GRP,ENG OIL.................. UOC:V53	1
2	XBFZZ	11083	4N0513	.BODY ASSEMBLY,OIL.................. UOC:V53	1
3	XAFZZ	11083	4N0512	..BODY.......................... UOC:V53	1
4	PAFZZ	11083	8M6489	..PIN,HOLLOW...................... UOC:V53	2
5	XDFZZ	11083	7N2156	..BEARING,SLEEVE.................. UOC:V53	2
6	PFFZZ	11083	4N5272	.SHAFT ASSEMBLY.................. UOC:V53	1
7	PFFZZ	11083	4N5270	.SHAFT ASSEMBLY.................. UOC:V53	1
8	XBFZF	11083	7N0286	.COVER ASSEMBLY.................. UOC:V53	1
9	PAFZZ	11083	8S6511	..BEARING,SLEEVE.................. UOC:V53	2
10	XAFZZ	11083	7N0285	..COVER......................... UOC:V53	1
11	PAFZZ	11083	0S1571	.BOLT........................... UOC:V53	4
12	XBFZZ	11083	4N0522	.RETAINER........................ UOC:V53	1
13	PAFZZ	11083	1M644	.SCREW,CAP,HEXAGON H............... UOC:V53	2
14	PAFZZ	11083	5M2894	.WASHER,FLAT..................... UOC:V53	2
15	XDHZZ	11083	4N8816	.SPACER......................... UOC:V53	1
16	PAFZZ	11083	2S2760	.SPRING,HELICAL,COMP............... UOC:V53	1
17	PFFZZ	11083	6N1931	.PLUNGER,INJECTION P............... UOC:V53	1
18	PAFZZ	11083	0S1590	BOLT,MACHINE..................... UOC:V53	1
19	PAFZZ	11083	5M2894	WASHER,FLAT...................... UOC:V53	3
20	PAFZZ	11083	L1143	BOLT,MACHINE..................... UOC:V53	2

END OF FIGURE

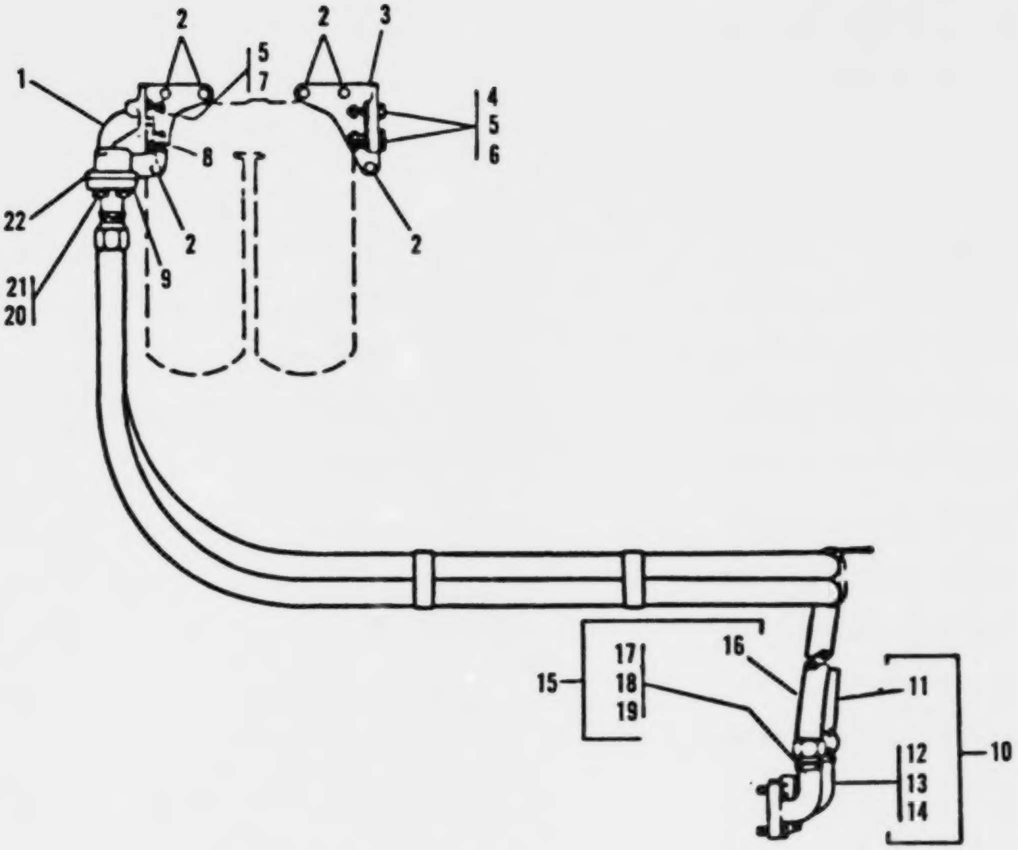

FIGURE 19. ENGINE OIL LINES

(1) ITEM NO	(2) SMR CODE	(3) CAGEC	(4) PART NUMBER	(5) DESCRIPTION AND USABLE ON CODES(UOC)	(6) QTY
				GROUP 0106: ENGINE LUBRICATION SYSTEM	
				FIG. 19 ENGINE OIL LINES	
1	XDOZZ	11083	4N8600	ADAPTER UOC:V53	1
2	PAOZZ	11083	0S1591	SCREW UOC:V53	6
3	XDOZZ	11083	2P8813	SUPPORT UOC:V53	1
4	PAOZZ	11083	0S1571	BOLT UOC:V53	4
5	PAOZZ	11083	5M2894	WASHER,FLAT UOC:V53	8
6	PAOZZ	15564	1377A	NUT,PLAIN,HEXAGON UOC:V53	4
7	PAOZZ	11083	1A2029	BOLT,MACHINE UOC:V53	4
8	PAOZZ	11083	2P4305	GASKET PART OF KIT P/N 5R4553, 6V0222, 6V0236 PART OF KIT P/N 5R4553 PART OF KIT P/N 6V220 PART OF KIT P/N 6V236 UOC:V53	2
9	PFOZZ	11083	1P4578	FLANGE,HALF UOC:V53	8
10	PAOZZ	11083	8N1468	HOSE ASSY UOC:V53	1
11	PAOZZ	11083	5P182	.HOSE UOC:V53	1
12	XAOOO	11083	1P1219	.STEM ASSY UOC:V53	1
13	PFOZZ	11083	3S7116	.SLEEVE UOC:V53	2
14	XAOZZ	11083	5S3826	.STEM ASSY UOC:V53	1
15	PAOZZ	11083	8N1467	HOSE ASSY UOC:V53	1
16	PAOZZ	11083	5P182	.HOSE UOC:V53	1
17	PFOZZ	11083	3S6573	.ELBOW,FLANGE TO HOS UOC:V53	1
18	PFOZZ	11083	3S7116	.SLEEVE UOC:V53	2
19	XAOZZ	11083	1P1219	.STEM ASSY UOC:V53	1
20	PAOZZ	11083	5P8244	WASHER,FLAT UOC:V53	16
21	PAOZZ	96906	MS90728-89	SCREW,CAP,HEXAGON H UOC:V53	16
22	PAOZZ	11083	8M4986	PACKING,PREFORMED PART OF KIT P/N 5R4553 PART OF KIT P/N 6V220 PART OF	4

(1) ITEM NO	(2) SMR CODE	(3) CAGEC	(4) PART NUMBER	(5) DESCRIPTION AND USABLE ON CODES(UOC)	(6) QTY
				KIT P/N 6V236....................... LOC:V53	

END OF FIGURE

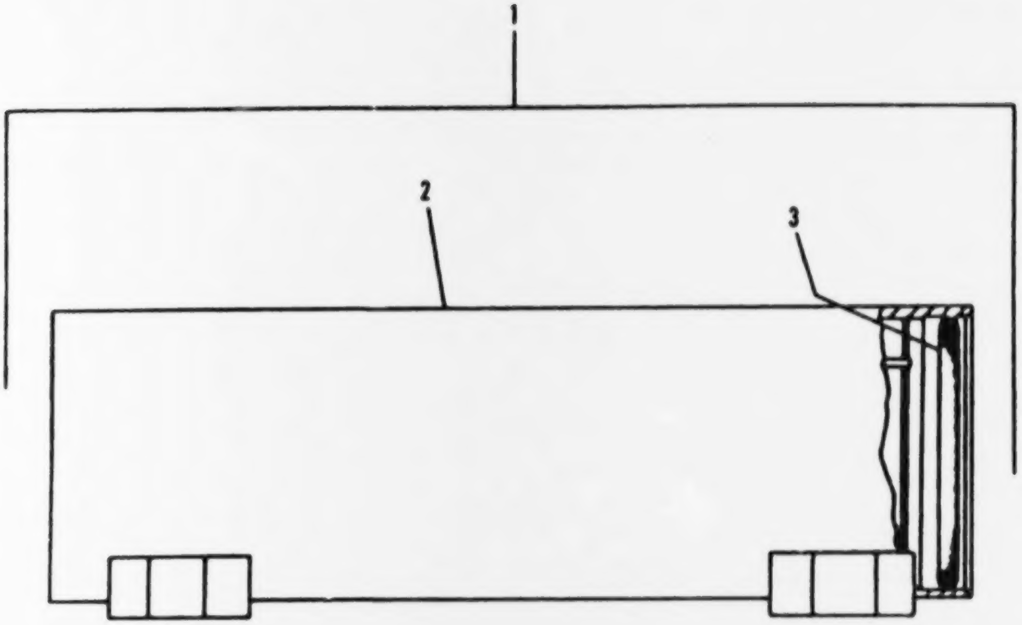

FIGURE 20. ENGINE OIL COOLER ASSEMBLY

(1) ITEM NO	(2) SMR CODE	(3) CAGEC	(4) PART NUMBER	(5) DESCRIPTION AND USABLE ON CODES(UOC)	(6) QTY
				GROUP 0106: ENGINE LUBRICATION SYSTEM	
				FIG. 20 ENGINE OIL COOLER ASSEMBLY	
1	XDFFF	11083	4NC729	COOLER GRP,ENG OIL.................. UOC:V53	1
2	PBFZZ	11083	6N8856	.CORE,OIL COOLER.................... UOC:V53	1
3	PAFZZ	11083	4F7387	.PACKING,PREFORMED PART OF KIT P/N 5R4553 PART OF KIT P/N 6V230 PART OF KIT P/N 6V236..................... UOC:V53	2

END OF FIGURE

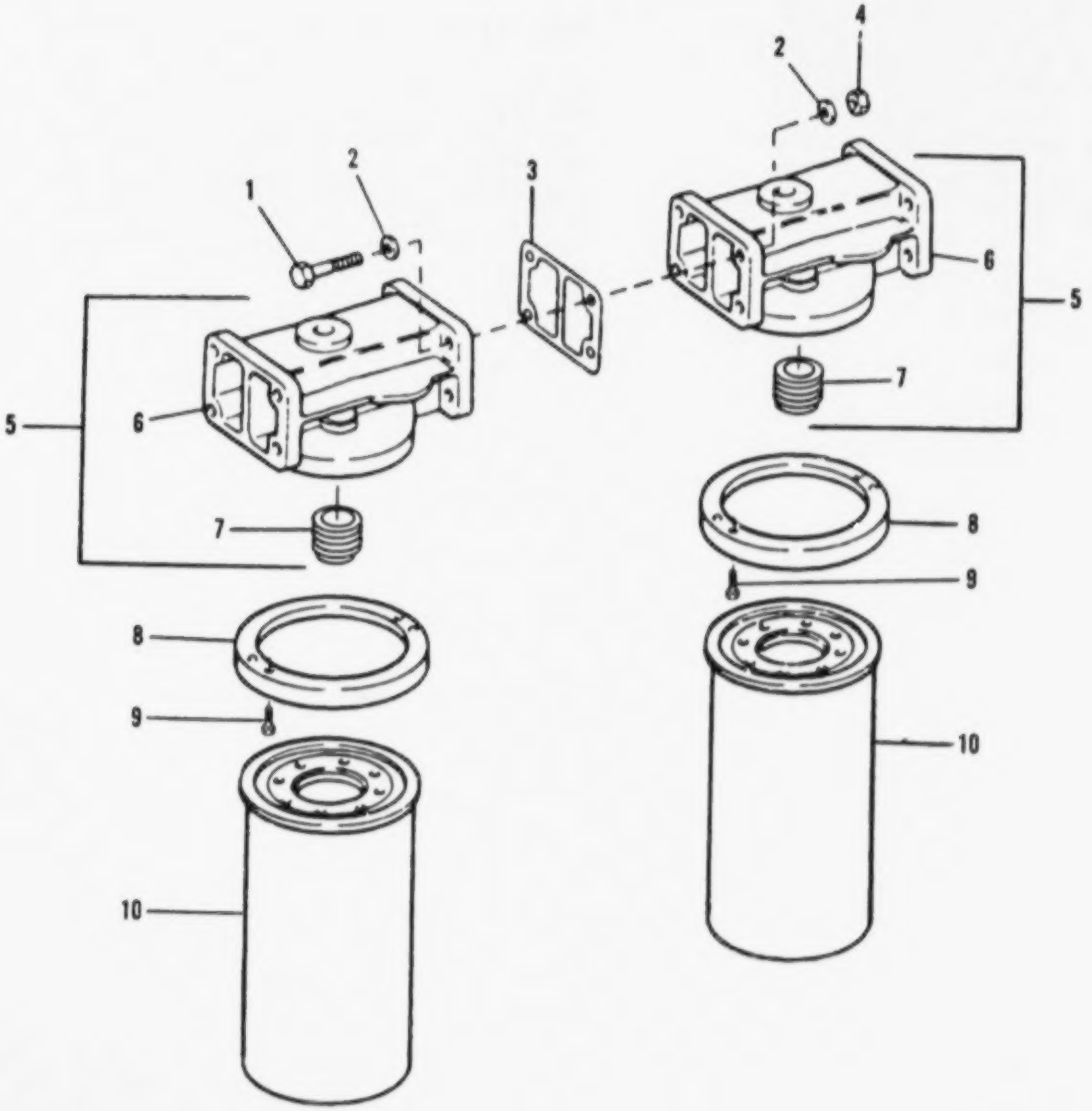

FIGURE 21. ENGINE OIL FILTER ASSEMBLY

(1) ITEM NO	(2) SMR CODE	(3) CAGEC	(4) PART NUMBER	(5) DESCRIPTION AND USABLE ON CODES(UOC)	(6) QTY
				GROUP 0106: ENGINE LUBRICATION SYSTEM	
				FIG. 21 ENGINE OIL FILTER ASSEMBLY	
1	PAOZZ	11083	0S1571	BOLT.............................. UOC:V53	4
2	PAOZZ	11083	5M2894	WASHER,FLAT....................... UOC:V53	8
3	PAOZZ	11083	2P4305	GASKET PART OF KIT P/N 5R4553 PART OF KIT P/N 6V236.................. UOC:V53	1
4	PAOZZ	15564	1377A	NUT,PLAIN,HEXAGON................. UOC:V53	4
5	PFOZZ	11083	2P4303	BASE ASSEMBLY..................... UOC:V53	2
6	XAOZZ	11083	7N4519	.BASE............................. UOC:V53	1
7	PFOZZ	11083	2P4304	.STUD............................. UOC:V53	1
8	PFOZZ	11083	4N7082	SHIELD............................ UOC:V53	2
9	PAOZZ	96906	MS21318-43	SCREW,DRIVE....................... UOC:V53	4
10	PAOZZ	11083	2P4005	FILTER ELEMENT,FLUI............... UOC:V53	2

END OF FIGURE

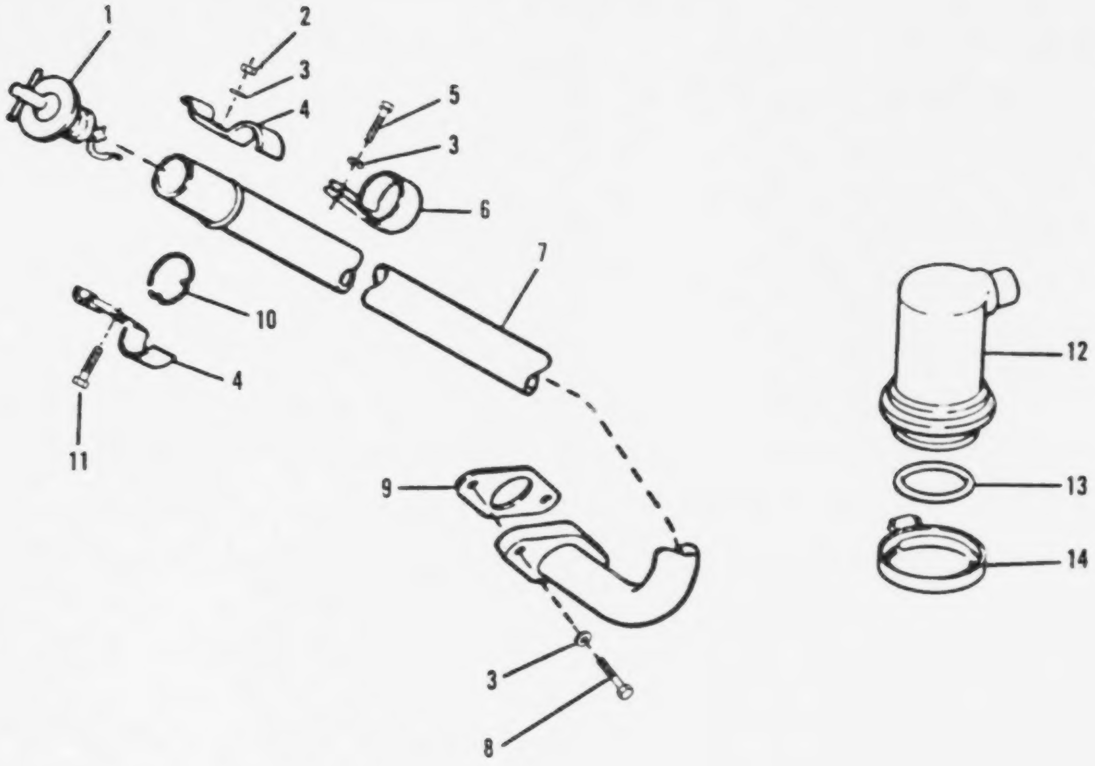

FIGURE 22. ENGINE OIL FILLER AND BREATHER ASSEMBLIES

(1) ITEM NO	(2) SMR CODE	(3) CAGEC	(4) PART NUMBER	(5) DESCRIPTION AND USABLE ON CODES(UOC)	(6) QTY
				GROUP 0106: ENGINE LUBRICATION SYSTEM	
				FIG. 22 ENGINE OIL FILLER AND BREATHER ASSEMBLIES	
1	PAOZZ	01943	4901-3	CAP,FILLER OPENING.................. UOC:V53	1
2	PAOZZ	15564	1377A	NUT,PLAIN,HEXAGON.................. UOC:V53	1
3	PAOZZ	11083	5M2894	WASHER,FLAT........................ UOC:V53	5
4	PAOZZ	11083	7N3047	STRAP,RETAINING.................... UOC:V53	2
5	PAOZZ	11083	0S1594	BOLT,MACHINE....................... UOC:V53	1
6	PAOZZ	11083	5L4504	CLIP,RETAINING..................... UOC:V53	1
7	XDCZZ	11083	6N1247	TUBE ASSY,OIL FLTR................. UOC:V53	1
8	PAOZZ	11083	2A4639	BOLT,MACHINE....................... UOC:V53	2
9	PAOZZ	11083	4N0790	GASKET PART OF KIT P/N 5R4553....... UOC:V53	1
10	PFOZZ	11083	7S1801	ANCHOR WIRE,SAFETY................. UOC:V53	1
11	PAOZZ	11083	0S1588	BOLT............................... UOC:V53	1
12	PAOZZ	11083	4N4668	BREATHER........................... UOC:V53	1
13	PAOZZ	11083	4F7390	PACKING,PREFORMED PART OF KIT P/N 5R4553 PART OF KIT P/N 5P9843....... UOC:V53	1
14	PAOZZ	11083	2N8109	COUPLING,CLAMP,GROO................ UOC:V53	1

END OF FIGURE

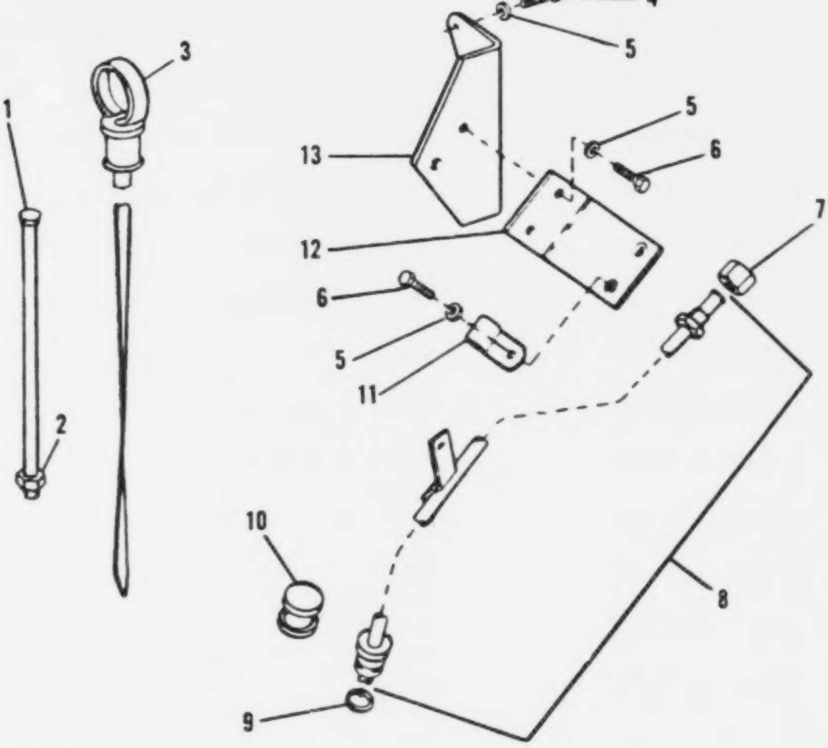

FIGURE 23. ENGINE OIL LEVEL GAGE ASSEMBLY

(1) ITEM NO	(2) SMR CODE	(3) CAGEC	(4) PART NUMBER	(5) DESCRIPTION AND USABLE ON CODES(UOC)	(6) QTY
				GROUP 0106: ENGINE LUBRICATION SYSTEM	
				FIG. 23 ENGINE OIL LEVEL GAGE ASSEMBLY	
1	XDOZZ	11083	8N0897	GUIDE,OIL LEVEL...................... UOC:V53	1
2	PAOZZ	11083	3K846	INVERTED NUT,TUBE C.................. UOC:V53	1
3	XDOZZ	11083	8N0808	GAGE ASSY,OIL LEVEL.................. UOC:V53	1
4	PAOZZ	11083	0S1591	SCREW................................ UOC:V53	2
5	PAOZZ	11083	5M2894	WASHER,FLAT.......................... UOC:V53	5
6	PAOZZ	11083	0S1594	BOLT,MACHINE......................... UOC:V53	3
7	PFOZZ	11083	6K8077	UNION................................ UOC:V53	1
8	XDOZZ	11083	6N1202	GUIDE ASSY........................... UOC:V53	1
9	PAOZZ	11083	8M5260	PACKING,PREFORMED PART OF KIT P/N 5R4553............................. UOC:V53	1
10	PAOZZ	11083	4N999	PLUG,OIL GAUGE....................... UOC:V53	3
11	PAOZZ	11083	1B3057	CLIP,SPRING TENSION.................. UOC:V53	1
12	XDOZZ	11083	6N1251	BRACKET ASSY......................... UOC:V53	1
13	XDOZZ	11083	6N1249	BRACKET ASSY......................... UOC:V53	1

END OF FIGURE

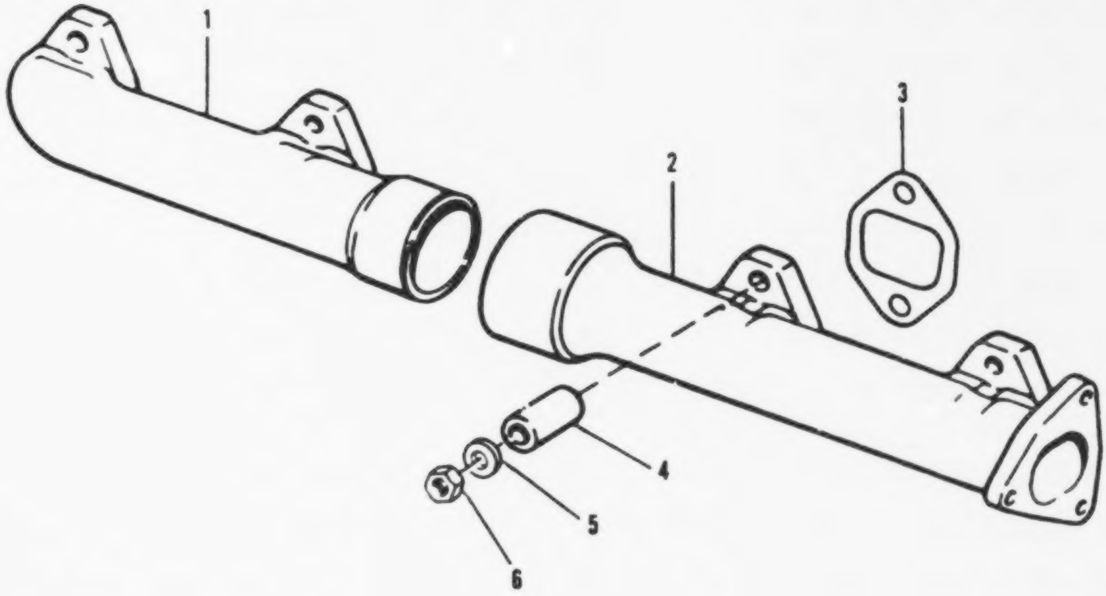

FIGURE 24. EXHAUST MANIFOLD

(1) ITEM NO	(2) SMR CODE	(3) CAGEC	(4) PART NUMBER	(5) DESCRIPTION AND USABLE ON CODES(UOC)	(6) QTY
				GROUP 0108: MANIFOLDS	
				FIG. 24 EXHAUST MANIFOLD	
1	XBFZZ	11083	4N1675	MANIFOLD,FRONT...................... UOC:V53	2
2	XBFZZ	11083	4N1676	MANIFOLD,REAR....................... UOC:V53	2
3	PAFZZ	11083	9Y4582	GASKET PART OF KIT P/N 5R4553 PART OF KIT P/N 5P9843................. UOC:V53	8
4	PFFZZ	11083	2S3770	SPACER,SLEEVE....................... UOC:V53	16
5	PAFZZ	11083	5M2894	WASHER,FLAT......................... UOC:V53	16
6	PAFZZ	11083	2N2766	NUT,PLAIN,HEXAGON................... UOC:V53	16

END OF FIGURE

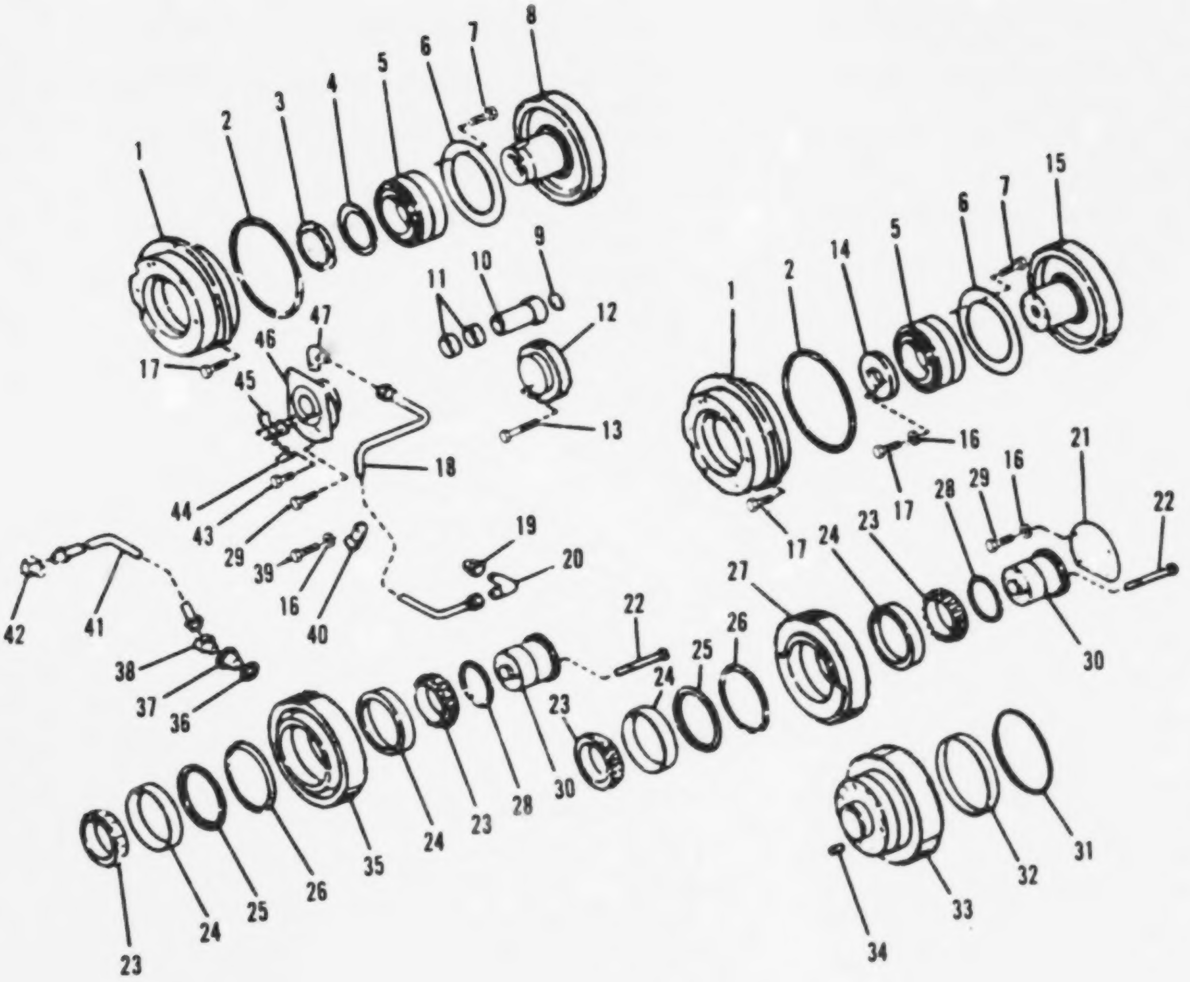

FIGURE 25. ACCESSORY DRIVE GEARS

(1) ITEM NO	(2) SMR CODE	(3) CAGEC	(4) PART NUMBER	(5) DESCRIPTION AND USABLE ON CODES(UOC)	(6) QTY
				GROUP 0109: DRIVING MECHANISMS	
				FIG. 25 ACCESSORY DRIVE GEARS	
1	XDFZZ	11083	8NC634	ADAPTER,HYD PUMP.................... UOC:V53	2
2	PAFZZ	11083	4N1230	SEAL,PLAIN PART OF KIT P/N 5R4553 PART OF KIT P/N 6V2978............... UOC:V53	2
3	PAFZZ	11083	5F7404	NUT,SELF-LOCKING,R.................. UOC:V53	1
4	PAFZZ	11083	5F7403	WASHER,KEY PART OF KIT P/N 5R4553 PART OF KIT P/N 6V2978............... UOC:V53	1
5	XDFZZ	11083	5P1370	BEARING,TPR RLR..................... UOC:V53	2
6	PAFZZ	11083	4N7183	RING,RETAINING...................... UOC:V53	2
7	PAFZZ	11083	1T720	BOLT,MACHINE........................ UOC:V53	12
8	XDFZZ	11083	8N0936	GEAR,HYD PUMP DR.................... UOC:V53	1
9	PAFZZ	96906	MS16625-1165	RING,RETAINING...................... UOC:V53	1
10	XDFZZ	11083	8N0935	GEAR,PUMP DR........................ UOC:V53	1
11	XDFZZ	11083	4N1186	BEARING,SLEEVE...................... UOC:V53	2
12	XDFZZ	11083	8N0934	GEAR,CAMSHAFT,REAR.................. UOC:V53	1
13	PAFZZ	96906	MS90728-39	BOLT,MACHINE........................ UOC:V53	4
14	PAFZZ	11083	7N4975	GEAR................................ UOC:V53	1
15	XDFZZ	11083	8N0937	GEAR,HYD PUMP DR.................... UOC:V53	1
16	PAFZZ	11083	5M2894	WASHER,FLAT......................... UOC:V53	9
17	PAFZZ	11083	1A2029	BOLT,MACHINE........................ UOC:V53	15
18	PAFZZ	11083	7N5659	TUBE ASSY........................... UOC:V53	1
19	PFFZZ	11083	4M5317	BUSHING,REDUCER..................... UOC:V53	1
20	XDFZZ	11083	5P4479	ELBOW,90 DEG,37 DEG................. UOC:V53	1
21	XDFZZ	11083	4N1720	COVER,BALANCE WT.................... UOC:V53	1
22	PAFZZ	11083	1D4566	BOLT,MACHINE........................ UOC:V53	8
23	PAFZZ	11083	3000061	CONE AND ROLLERS,TA................. UOC:V53	4

(1) ITEM NO	(2) SMR CODE	(3) CAGEC	(4) PART NUMBER	(5) DESCRIPTION AND USABLE ON CODES(UOC)	(6) QTY
24	PFFZZ	11083	3C0060	CUP,TAPERED ROLLER.................. UOC:V53	4
25	XDFZZ	11083	2P7555	SPACER,CUP.......................... UOC:V53	2
26	PAFZZ	11083	5K9065	RING,RETAINING...................... UOC:V53	2
27	XDFZZ	11083	8N0938	GEAR,BALANCER,REAR.................. UOC:V53	1
28	XDFZZ	11083	2P7554	SPACER,CONE......................... UOC:V53	2
29	PAFZZ	11083	0S1594	BOLT,MACHINE........................ UOC:V53	6
30	XDFZZ	11083	4N1235	SHAFT,IDLER GR...................... UOC:V53	2
31	PAFZZ	11083	2K4472	PACKING,PREFORMED PART OF KIT P/N 5R4553 PART OF KIT P/N 6V2978....... UOC:V53	1
32	PFFZZ	11083	4N0848	SLEEVE.............................. UOC:V53	1
33	XDFZZ	11083	5R4411	GEAR,CSHAFT,REAR.................... UOC:V53	1
34	PAFZZ	11083	4N0684	PIN................................. UOC:V53	1
35	XDFZZ	11083	7N8956	GEAR,IDLER.......................... UOC:V53	1
36	PAFZZ	81349	M83248/2-910	PACKING,PREFORMED................... UOC:V53	1
37	PAFZZ	11083	3P764	PLUG................................ UOC:V53	1
38	PFFZZ	11083	9S7722	ELBOW,PIPE TO TUBE.................. UOC:V53	1
39	PAFZZ	11083	S1588	BOLT,MACHINE........................ UOC:V53	1
40	PAFZZ	11083	4H3218	CLIP,RETAINING...................... UOC:V53	1
41	XDFZZ	11083	4N8342	TUBE ASSY PART OF KIT P/N 5R4553 PART OF KIT P/N 6V2978.............. UOC:V53	1
42	PFFZZ	11083	5K9235	ELBOW,PIPE TO TUBE.................. UOC:V53	1
43	PAFZZ	11083	0L1351	BOLT,MACHINE........................ UOC:V53	2
44	PAFZZ	11083	9F7882	PIN................................. UOC:V53	1
45	XDFZZ	11083	7N1564	WASHER,THRUST....................... UOC:V53	1
46	XDFZZ	11083	7N1565	ADAPTER............................. UOC:V53	1
47	PFFZZ	11083	2N1287	ELBOW,PIPE TO TUBE.................. UOC:V53	1

END OF FIGURE

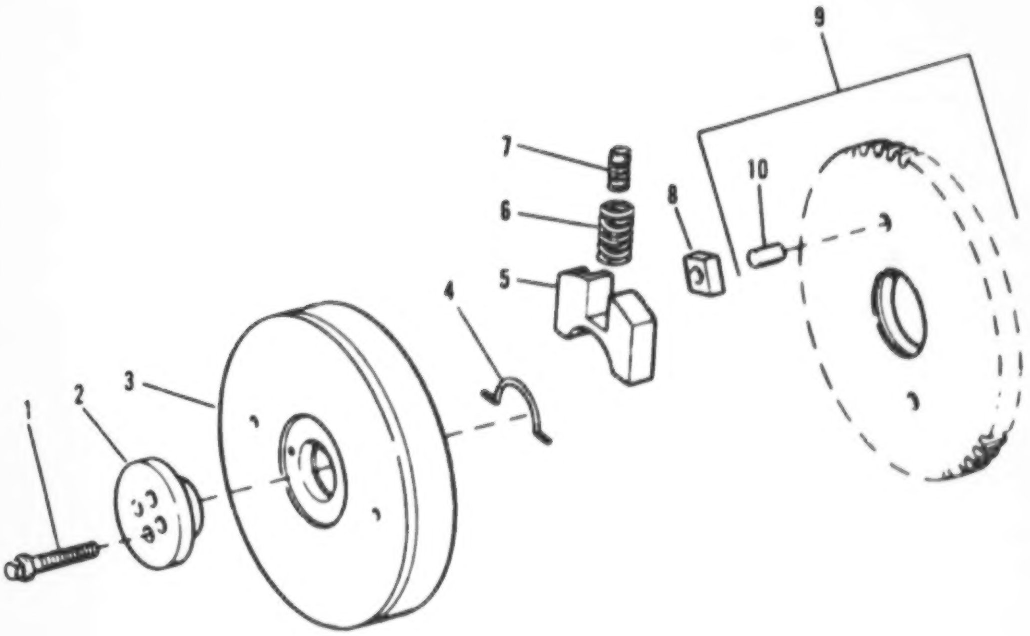

FIGURE 26. DRIVE GEAR, GOVERNOR AND FUEL PUMP

(1) ITEM NO	(2) SMR CODE	(3) CAGEC	(4) PART NUMBER	(5) DESCRIPTION AND USABLE ON CODES(UOC)	(6) QTY
				GROUP 0109: DRIVING MECHANISMS	
				FIG. 26 DRIVE GEAR, GOVERNOR AND FUEL PUMP	
1	PAFZZ	11083	5J5793	BOLT,MACHINE........................ UOC:V53	4
2	PAFZZ	11083	6N3927	BEARING,SLEEVE...................... UOC:V53	1
3	XDFFF	11083	9N5075	FLANGE ASSY......................... UOC:V53	1
4	PAFZZ	11083	6N0493	RING................................ UOC:V53	1
5	XDFZZ	11083	6N5156	WEIGHT,TIMING....................... UOC:V53	2
6	XDFZZ	11083	9N5077	SPRING.............................. UOC:V53	2
7	XDFZZ	11083	9N5078	SPRING.............................. UOC:V53	2
8	XDFZZ	11083	6N2523	SLIDE............................... UOC:V53	2
9	XDFZZ	11083	6N2533	GEAR ASSY,TIMING.................... UOC:V53	1
10	XDFZZ	11083	8H0333	.PISTON............................. UOC:V53	2

END OF FIGURE

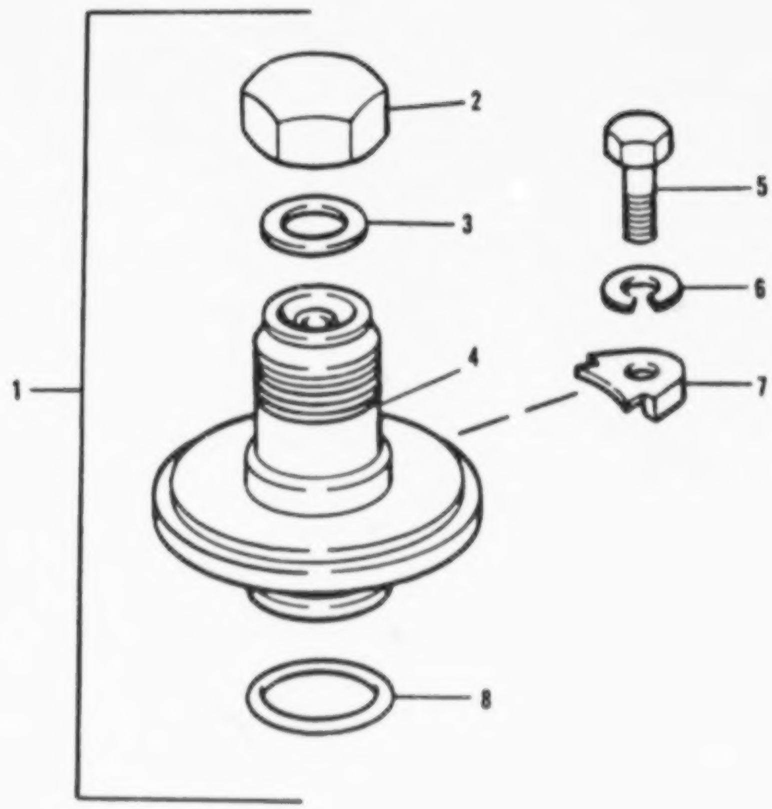

FIGURE 27. TACHOMETER DRIVE

(1) ITEM NO	(2) SMR CODE	(3) CAGEC	(4) PART NUMBER	(5) DESCRIPTION AND USABLE ON CODES(UOC)	(6) QTY
				GROUP 0109: DRIVING MECHANISMS	
				FIG. 27 TACHOMETER DRIVE	
1	AOOOO	11083	9N0016	TACHOMETER DR GRP.................... UOC:V53	1
2	PFOZZ	11083	9B2232	.CAP,INDICATOR....................... UOC:V53	1
3	PAOZZ	11083	7H5859	.GASKET.............................. UOC:V53	1
4	XDOZZ	11083	9N3018	.ADAPTER ASSY........................ UOC:V53	1
5	PAOZZ	96906	MS90728-32	.BOLT,MACHINE........................ UOC:V53	2
6	PAOZZ	11083	3F9556	.WASHER,LOCK......................... UOC:V53	2
7	PAOZZ	11083	9S3032	.CLAMP,RIM CLENCHING................. UOC:V53	2
8	PAOZZ	11083	4M8303	.PACKING,PREFORMED PART OF KIT P/N 5R4553............................. UOC:V53	1

END OF FIGURE

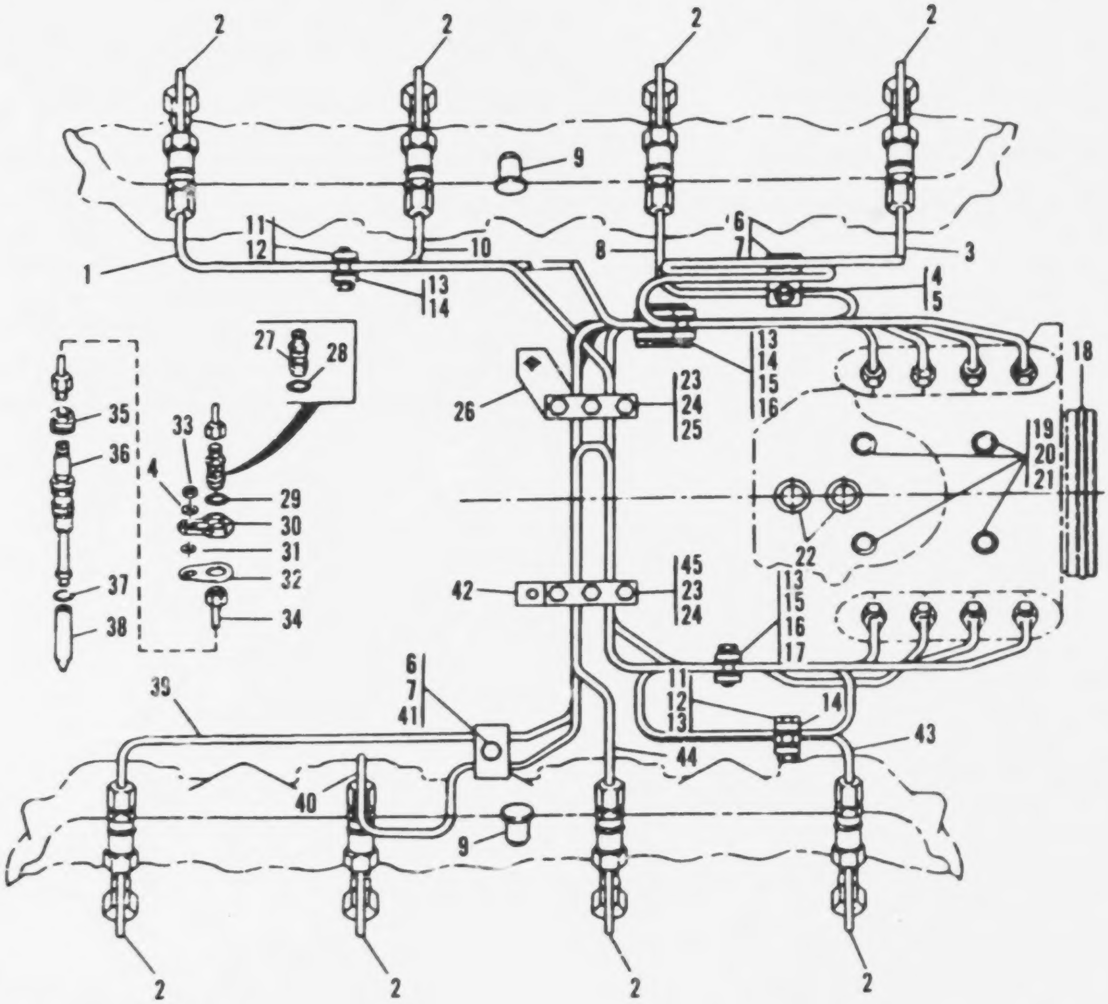

FIGURE 28. FUEL INJECTION LINES AND NOZZLES

GROUP 03: FUEL SYSTEMS

GROUP 0302: FUEL PUMPS

FIG. 28 FUEL INJECTION LINES AND NOZZLES

(1) ITEM NO	(2) SMR CODE	(3) CAGEC	(4) PART NUMBER	(5) DESCRIPTION AND USABLE ON CODES(UOC)	(6) QTY
1	XDFZZ	11083	9N3977	LINE ASSY............................ UOC:V53	1
2	XDFZZ	11083	9N3970	LINE ASSY............................ UOC:V53	8
3	XDFZZ	11083	9N3971	LINE ASSY............................ UOC:V53	1
4	PAFZZ	11083	9M1974	WASHER,FLAT.......................... UOC:V53	10
5	PAFZZ	11083	1B5354	NUT.................................. UOC:V53	2
6	PFFZZ	11083	4N2555	DAMPER,FUEL LINE..................... UOC:V53	2
7	PFFZZ	11083	1P6909	STRIP ASSEMBLY....................... UOC:V53	2
8	XDFZZ	11083	9N3973	LINE ASSY............................ UOC:V53	1
9	PAFZZ	11083	6N2944	GROMMET,RUBBER....................... UOC:V53	2
10	XDFZZ	11083	9N3975	LINE ASSY............................ UOC:V53	1
11	PAFZZ	11083	6N2751	STRAP,RETAINING...................... UOC:V53	2
12	XDFZZ	11083	7N0671	DAMPER............................... UOC:V53	4
13	XDFZZ	11083	7N0654	BOLT ASSY............................ UOC:V53	14
14	PAFZZ	11083	7N665	PLATE,RETAINING,FUE.................. UOC:V53	2
15	PAFZZ	11083	6N2754	STRAP,RETAINING...................... UOC:V53	2
16	XDFZZ	11083	7N0815	DAMPER............................... UOC:V53	4
17	PAFZZ	11083	7N667	CLAMP,LOOP........................... UOC:V53	2
18	PAFZZ	11083	8J1688	SEAL,PLAIN PART OF KIT P/N 5R4553... UOC:V53	1
19	PAFZZ	11083	5M2894	WASHER,FLAT.......................... UOC:V53	4
20	XDFZZ	11083	6B8438	SPACER............................... UOC:V53	4
21	PAFZZ	11083	0S1591	SCREW................................ UOC:V53	4
22	PAFZZ	11083	1S0004	PACKING,PREFORMED PART OF KIT P/N 5R4553............................ UOC:V53	2

(1) ITEM NO	(2) SMR CODE	(3) CAGEC	(4) PART NUMBER	(5) DESCRIPTION AND USABLE ON CODES(UOC)	(6) QTY
23	XDFZZ	11083	7N0672	DAMPER.............................. UOC:V53	10
24	PAFZZ	11083	7N668	PLATE,RETAINING,FUE................. UOC:V53	5
25	XDFZZ	11083	7N0655	BOLT ASSY........................... UOC:V53	3
26	PAFZZ	11083	6N1277	STRAP,RETAINING..................... UOC:V53	1
27	PBHZZ	11083	4N1797	ADAPTER ASSEMBLY.................... UOC:V53	8
28	PAHZZ	11083	8M4437	PACKING,PREFORMED PART OF KIT P/N 5R4553 PART OF KIT P/N 5P9843....... UOC:V53	1
29	PAHZZ	11083	1H1023	PACKING,PREFORMED PART OF KIT P/N 5R4553 PART OF KIT P/N 5P9843....... UOC:V53	8
30	PAHZZ	11083	4N1292	LOCK................................ UOC:V53	8
31	PAHZZ	11083	4B4277	WASHER.............................. UOC:V53	8
32	XBHZZ	11083	9N2481	SPACER.............................. UOC:V53	8
33	PAHZZ	11083	1B5354	NUT................................. UOC:V53	8
34	XAHZZ	11083	9N5005	TUBE ASSY........................... UOC:V53	1
35	PAHZZ	11083	4N3759	NUT,TUBE COUPLING................... UOC:V53	8
36	XBHZZ	11083	9N3693	BODY................................ UOC:V53	8
37	PAHZZ	11083	5P2060	SEAL,PACKING PART OF KIT P/N 5R4553. UOC:V53	8
38	PAFZZ	11083	9L6884	NOZZLE,FUEL INJECTI................. UOC:V53	8
39	XDFZZ	11083	9N3978	LINE ASSY........................... UOC:V53	1
40	XDFZZ	11083	9N3976	LINE ASSY........................... UOC:V53	1
41	PAFZZ	11083	6N608	PLATE,RETAINING,FUE................. UOC:V53	1
42	XDFZZ	11083	7N0656	BOLT ASSY........................... UOC:V53	3
43	XDFZZ	11083	9N3974	LINE ASSY........................... UOC:V53	1
44	XDFZZ	11083	9N3972	LINE ASSY........................... UOC:V53	1
45	PFFZZ	11083	9S2299	WASHER,FLAT......................... UOC:V53	2

END OF FIGURE

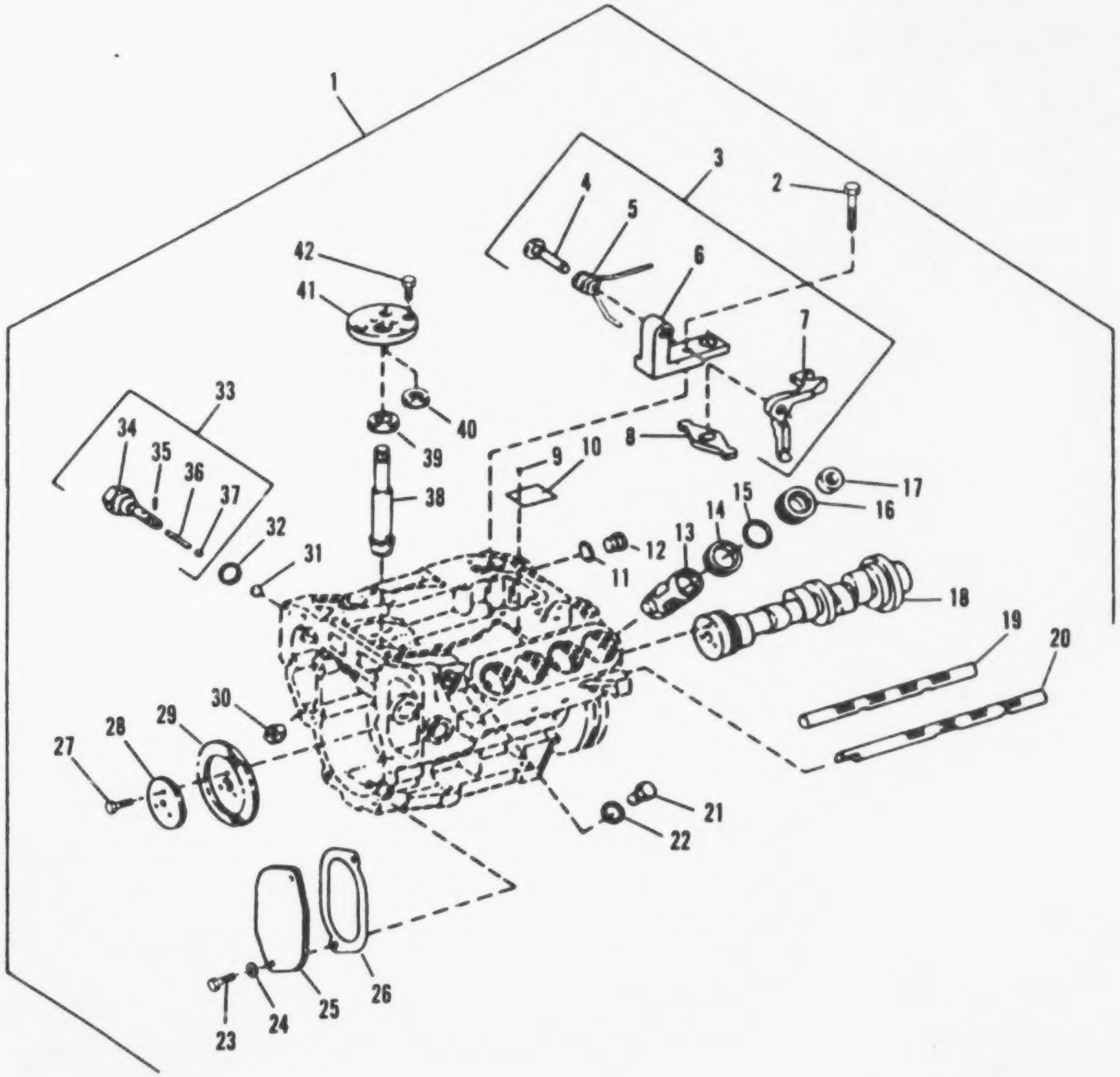

FIGURE 29. FUEL INJECTION PUMP ASSEMBLY

(1) ITEM NO	(2) SMR CODE	(3) CAGEC	(4) PART NUMBER	(5) DESCRIPTION AND USABLE ON CODES(UOC)	(6) QTY
				GROUP 0302: FUEL PUMPS	
				FIG. 29 FUEL INJECTION PUMP ASSEMBLY	
1	XDFHH	11083	7N6389	PUMP GRP,FUEL INJ.................... UOC:V53	1
2	PAHZZ	96906	MS90727-6	.BOLT,MACHINE........................ UOC:V53	1
3	XDHZZ	11083	7N2654	.BRACKET ASSY........................ UOC:V53	1
4	PAHZZ	11083	6N6955	..PIN................................ UOC:V53	1
5	XDHZZ	11083	7N2653	..SPRING............................. UOC:V53	1
6	XDHZZ	11083	4N0903	..BRACKET............................ UOC:V53	1
7	XDHZZ	11083	4N0904	..LEVER.............................. UOC:V53	1
8	XDHZZ	11083	4N1572	.LINK................................ UOC:V53	1
9	PAHZZ	96906	MS21318-21	.SCREW,DRIVE......................... UOC:V53	2
10	XDHZZ	11083	9N3938	.PLATE............................... UOC:V53	1
11	PAHZZ	11083	3D2824	.PACKING,PREFORMED PART OF KIT P/N 5R4553............................ UOC:V53	2
12	PAHZZ	11083	9S8008	.PLUG................................ UOC:V53	2
13	XDHZZ	11083	6N3199	.LIFTER ASSY......................... UOC:V53	8
14	XDHZZ	11083	8H9206	.SPACER,RING......................... UOC:V53	8
15	PAHZZ	11083	3D2992	.PACKING,PREFORMED PART OF KIT P/N 5R4553............................ UOC:V53	8
16	PFHZZ	11083	2M4314	.BUSHING,MACHINE THR................. UOC:V53	8
17	PAHZZ	11083	8H9204	.FELT,MECHANICAL,PRE................. UOC:V53	8
18	XDHZZ	11083	9N3847	.CAMSHAFT............................ UOC:V53	1
19	XDHZZ	11083	4N0901	.RACK................................ UOC:V53	1
20	XDHZZ	11083	4N0900	.RACK................................ UOC:V53	1
21	PAHZZ	11083	9S4191	.PLUG,MACHINE THREAD................. UOC:V53	1
22	PAHZZ	25184	906-737-70	.PACKING,PREFORMED PART OF KIT P/N 5R4553............................ UOC:V53	1
23	PAHZZ	11083	S1615	.BOLT,MACHINE........................	2

(1) ITEM NO	(2) SMR CODE	(3) CAGEC	(4) PART NUMBER	(5) DESCRIPTION AND USABLE ON CODES(UOC)	(6) QTY
				UOC:V53	
24	PAHZZ	11083	5P0537	.WASHER.............................. UOC:V53	2
25	XDHZZ	11083	4N1634	.COVER............................... UOC:V53	1
26	PAHZZ	11083	4N1636	.GASKET PART OF KIT P/N 5R4553...... UOC:V53	1
27	PAHZZ	96906	MS90728-34	.BOLT,MACHINE........................ UOC:V53	3
28	XDHZZ	11083	4N0776	.RETAINER............................ UOC:V53	1
29	XDHZZ	11083	4N0905	.GEAR................................ UOC:V53	1
30	PAHZZ	11083	5M6214	.PLUG,PIPE........................... UOC:V53	1
31	PAHZZ	11083	5F9144	.PACKING,PREFORMED PART OF KIT P/N 5R4553.............................. UOC:V53	1
32	PAHZZ	81349	M83248-2-908	.PACKING,PREFORMED PART OF KIT P/N 5R4553.............................. UOC:V53	1
33	XDHZZ	11083	4N0824	.VALVE ASSY.......................... UOC:V53	1
34	XAHZZ	11083	4N0823	..BODY............................... UOC:V53	1
35	XDHZZ	11083	7L8768	..PIN,STRAIGHT,HEADLE................ UOC:V53	1
36	PFHZZ	11083	7L8696	..SPRING............................. UOC:V53	1
37	XAHZZ	11083	7L8765	..PISTON............................. UOC:V53	1
38	XDHZZ	11083	6N4165	.PINION ASSY......................... UOC:V53	1
39	XDHZZ	11083	8N0560	.GEAR................................ UOC:V53	1
40	XDHZZ	11083	8N0561	.GEAR................................ UOC:V53	1
41	XDHZZ	11083	6N7695	.COVER............................... UOC:V53	1
42	PAHZZ	11083	6L5897	.SCREW,CAP,SOCKET HE................. UOC:V53	2

END OF FIGURE

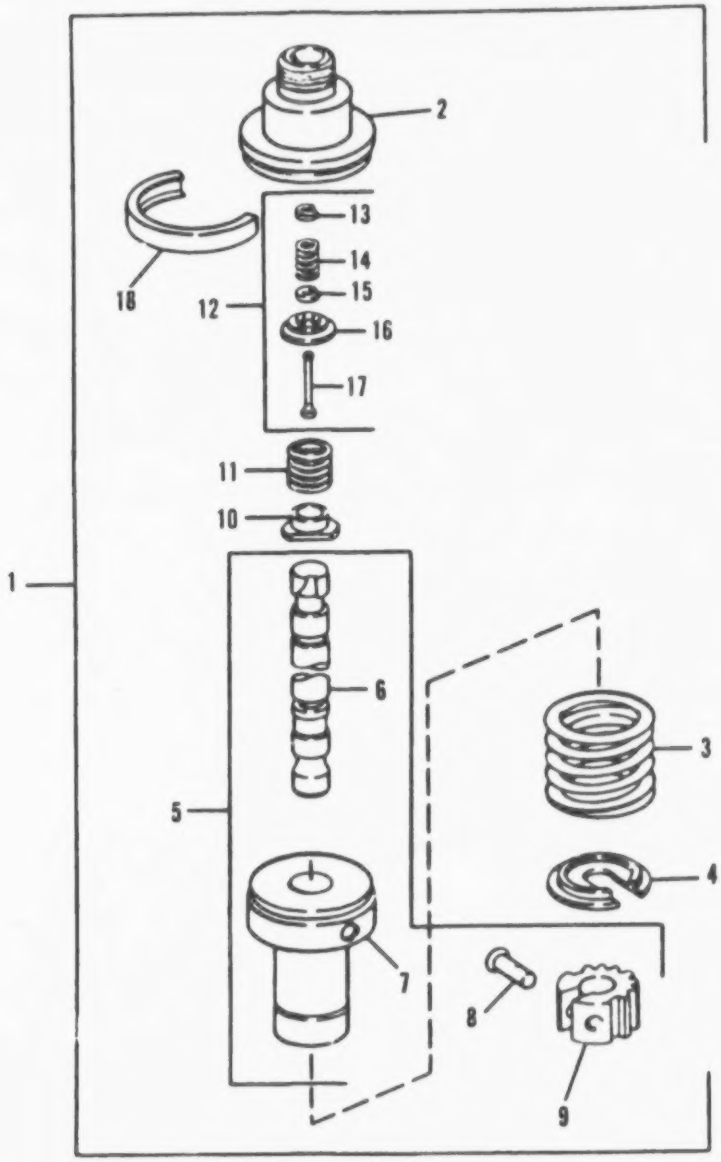

FIGURE 30. FUEL INJECTION PUMP

(1) ITEM NO	(2) SMR CODE	(3) CAGEC	(4) PART NUMBER	(5) DESCRIPTION AND USABLE ON CODES(UOC)	(6) QTY
				GROUP 0302: FUEL PUMPS	
				FIG. 30 FUEL INJECTION PUMP	
1	PAFFF	11083	6N7829	PUMP,FUEL,METERING.................. UOC:V53	6
2	PAHZZ	11083	9L6853	.BONNET........................... UOC:V53	1
3	PAHZZ	11083	7N1208	.SPRING,HELICAL,COMP............... UOC:V53	1
4	PAHZZ	11083	7N1066	.WASHER,SHOULDERED................ UOC:V53	1
5	XDHZZ	11083	6N7828	.PLUNGER & BARREL AS............... UOC:V53	1
6	XAHZZ	11083	6N7827	..PLUNGER.......................... UOC:V53	1
7	XAHZZ	11083	7N4368	..BARREL........................... UOC:V53	1
8	PAHZZ	11083	8H9299	..SCREW,CAP,SOCKET HE.............. UOC:V53	1
9	XDHZZ	11083	8S1472	..GEAR............................. UOC:V53	1
10	PAHZZ	11083	9L6852	.COLLAR,CHECK VALVE................ UOC:V53	1
11	XDHZZ	11083	6N0024	.SPRING,HELICAL,COMP............... UOC:V53	1
12	PAHZZ	11083	9N0593	.CARTRIDGE,CHECK VAL............... UOC:V53	1
13	XAHZZ	11083	8M1581	..RETAINER......................... UOC:V53	1
14	XAHZZ	11083	8H1914	..SPRING........................... UOC:V53	1
15	XAHZZ	11083	3F6486	..SPACER........................... UOC:V53	1
16	XAHZZ	11083	9N0592	..VALVE............................ UOC:V53	1
17	XAHZZ	11083	9L6851	..CHECK............................ UOC:V53	1
18	PFHZZ	11083	1M3506	.RING,RETAINING.................... UOC:V53	1

END OF FIGURE

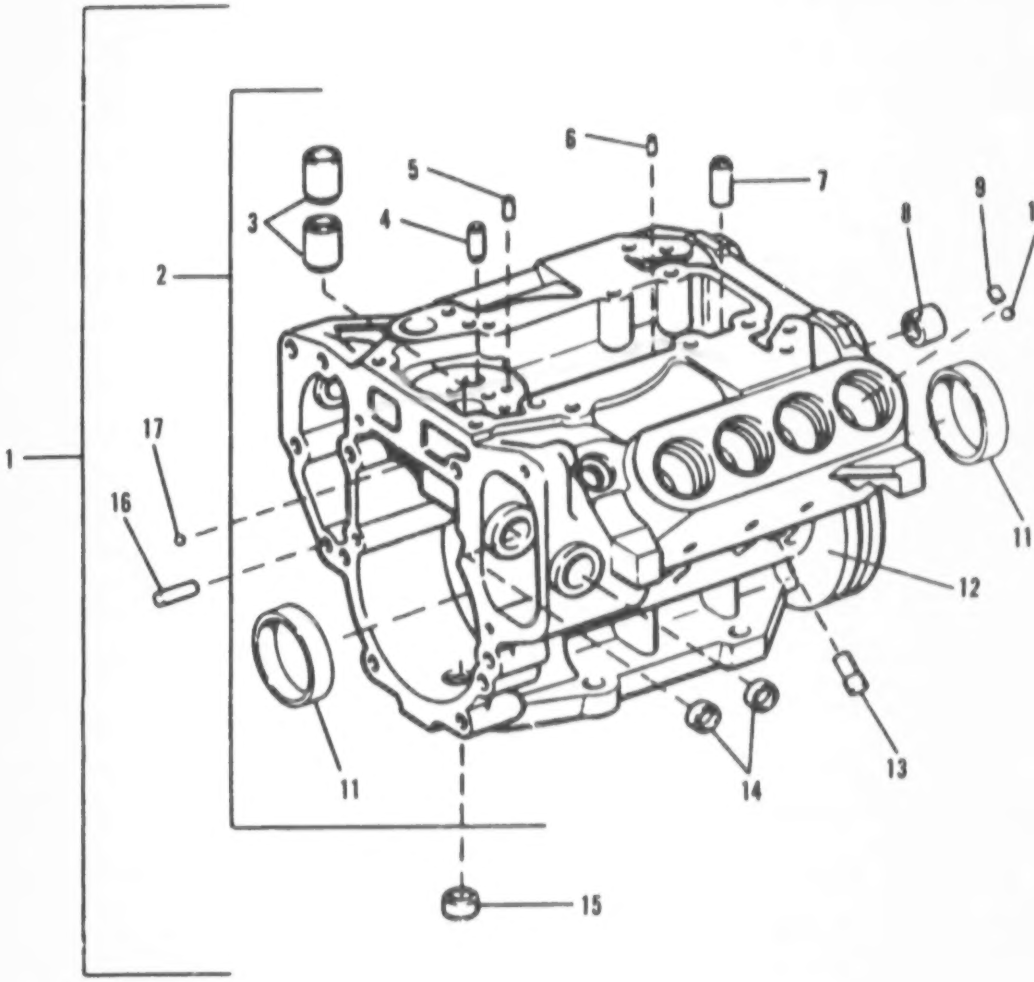

FIGURE 31. FUEL INJECTION PUMP HOUSING ASSEMBLY

(1) ITEM NO	(2) SMR CODE	(3) CAGEC	(4) PART NUMBER	(5) DESCRIPTION AND USABLE ON CODES(UOC)	(6) QTY
				GROUP 0302: FUEL PUMPS	
				FIG. 31 FUEL INJECTION PUMP HOUSING ASSEMBLY	
1	XDHHH	11083	7N4574	HOUSING ASSY........................ UOC:V53	1
2	XAHHH	11083	8N4712	.HOUSING ASSY....................... UOC:V53	1
3	XDHZZ	11083	7N0242	..BEARING........................... UOC:V53	2
4	XDHZZ	11083	6N7266	..SHAFT............................. UOC:V53	1
5	PAHZZ	11083	5M6970	..PIN............................... UOC:V53	1
6	PAHZZ	11083	8L6565	..PIN,STRAIGHT,HEADLE............... UOC:V53	1
7	PAHZZ	11083	4N855	..PIN,HOLLOW........................ UOC:V53	1
8	PAHZZ	11083	9S4160	..BEARING,SLEEVE.................... UOC:V53	2
9	PAHZZ	11083	1P234	..PIN,GROOVED,HEADLES............... UOC:V53	8
10	PFHZZ	11083	1P0232	..BALL.............................. UOC:V53	8
11	XDHZZ	11083	6N8441	..BEARING........................... UOC:V53	2
12	XAHZZ	11083	4N0359	..HOUSING........................... UOC:V53	1
13	PAHZZ	11083	4M1474	..PIN,SHOULDER,HEADLE............... UOC:V53	4
14	PAHZZ	11083	4N952	..PLUG,EXPANSION.................... UOC:V53	2
15	PAHZZ	11083	4N775	.PIN,HOLLOW......................... UOC:V53	2
16	PAHZZ	11083	9L9766	.PIN................................ UOC:V53	2
17	PFHZZ	96906	MS19059-2412	.BALL,BEARING....................... UOC:V53	1

END OF FIGURE

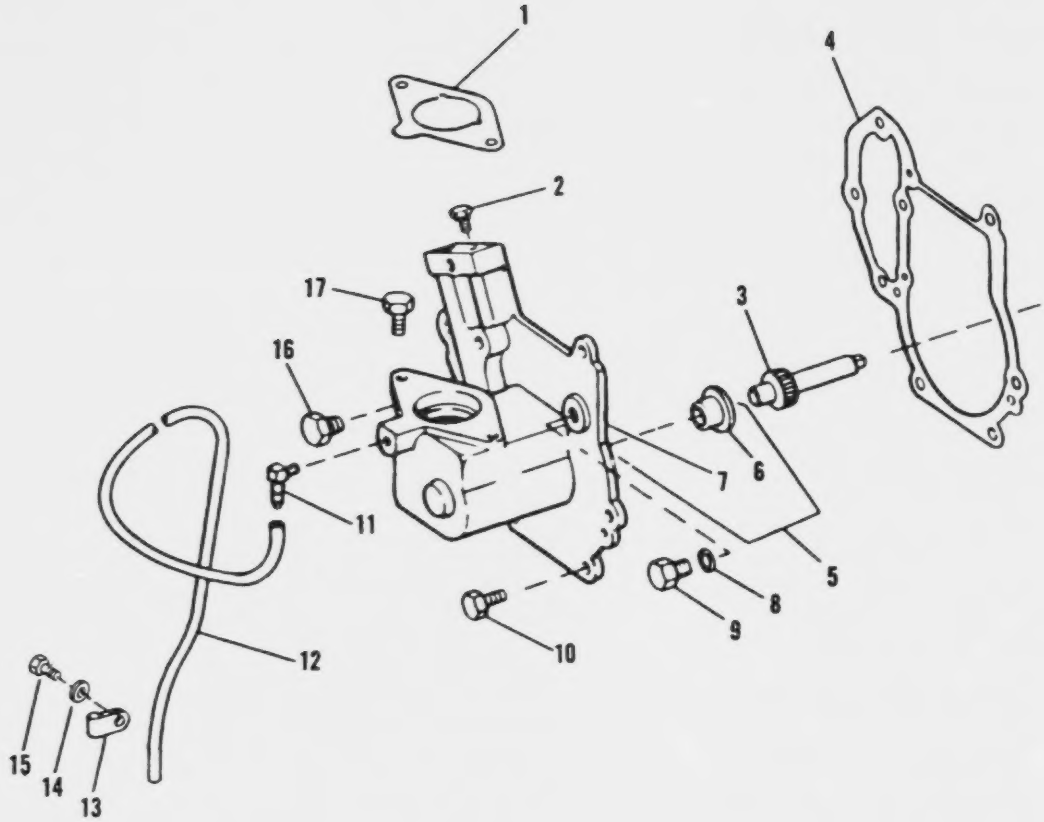

FIGURE 32. FUEL TRANSFER PUMP AND DRAIN ASSEMBLY

(1) ITEM NO	(2) SMR CODE	(3) CAGEC	(4) PART NUMBER	(5) DESCRIPTION AND USABLE ON CODES(UOC)	(6) QTY
				GROUP 0302: FUEL PUMPS	
				FIG. 32 FUEL TRANSFER PUMP AND DRAIN ASSEMBLY	
1	PAOZZ	11083	4N1105	GASKET PART OF KIT P/N 5R4553....... UOC:V53	1
2	PAFZZ	11083	5M6214	PLUG,PIPE.......................... UOC:V53	1
3	XBFZZ	11083	4N1098	SHAFT ASSY......................... UOC:V53	1
4	PAOZZ	11083	4N1104	GASKET PART OF KIT P/N 5R4553 PART OF KIT P/N 6V241.................. UOC:V53	1
5	XBFFF	11083	4N1091	HOUSING ASSY,ADPTR................. UOC:V53	1
6	XBFZZ	11083	2D6576	.BEARING,FLANGE.................... UOC:V53	1
7	XAFZZ	11083	4N1095	.HOUSING........................... UOC:V53	1
8	PAFZZ	11083	7J204	SEAL,SPECIAL PART OF KIT P/N 5R4553. UOC:V53	1
9	PAFZZ	11083	4N7437	PLUG,MACHINE THREAD................ UOC:V53	1
10	PAOZZ	11083	0S1594	BOLT,MACHINE....................... UOC:V53	6
11	XDOZZ	11083	110-03536	FITTING,90 DEG ELBO................ UOC:V53	1
12	PAOZZ	84561	4-035-250	TUBING,NONMETALLIC................. UOC:V53	1
13	PAOZZ	11083	4H8878	CLAMP,LOOP......................... UOC:V53	1
14	PAOZZ	11083	5M2894	WASHER,FLAT........................ UOC:V53	1
15	PAOZZ	96906	MS18154-58	SCREW,CAP,HEXAGON H................ UOC:V53	1
16	PAOZZ	96105	F19C034	PLUG,PIPE.......................... UOC:V53	1
17	PAFZZ	96906	MS90728-32	BOLT,MACHINE....................... UOC:V53	2

END OF FIGURE

best copy available

Reproduced from poor document.

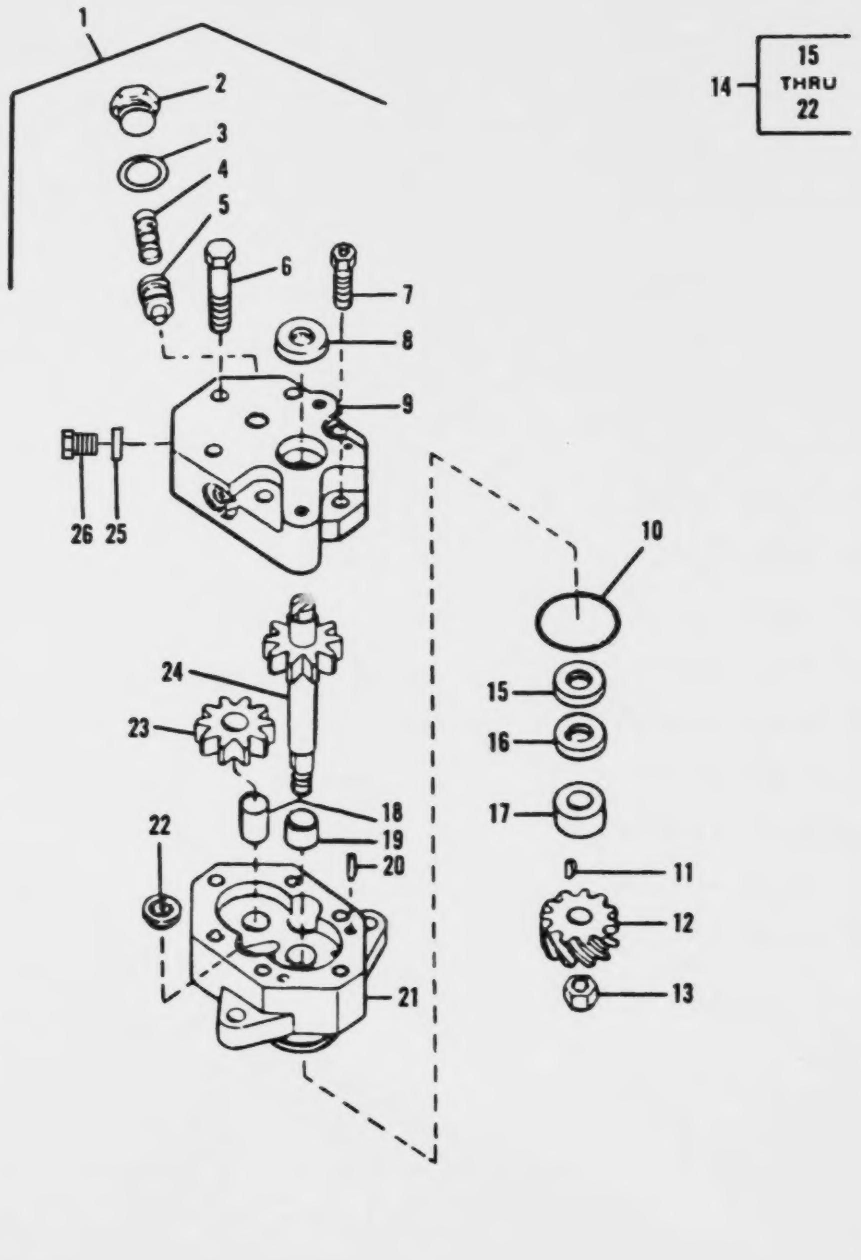

FIGURE 33. FUEL TRANSFER PUMP

GROUP 0302: FUEL PUMPS

FIG. 33 FUEL TRANSFER PUMP

(1) ITEM NO	(2) SMR CODE	(3) CAGEC	(4) PART NUMBER	(5) DESCRIPTION AND USABLE ON CODES(UOC)	(6) QTY
1	PBOZZ	11083	4W5477	PUMP,ROTARY........................... UOC:V53	1
2	PAFZZ	11083	7S4440	.PLUG,MACHINE THREAD................ UOC:V53	1
3	PAFZZ	11083	4N7465	.GASKET PART OF KIT P/N 5R4553...... UOC:V53	1
4	XBFZZ	11083	6N1069	.SPRING,HELICAL,COMP................ UOC:V53	1
5	PFFZZ	11083	8M0874	.DISK,VALVE........................... UOC:V53	1
6	PAFZZ	96906	MS90728-40	.BOLT,MACHINE......................... UOC:V53	3
7	PAFZZ	11083	5J5314	.SCREW,CAP,SOCKET HE................ UOC:V53	3
8	PAFZZ	11083	5P9295	.SEAL,PLAIN ENCASED PART OF KIT P/ N 5R4553.......................... UOC:V53	1
9	XBFZZ	11083	7N6128	.COVER,FUEL XFR PUMP................ UOC:V53	1
10	PAOZZ	11083	6J2419	.PACKING,PREFORMED PART OF KIT P/N 5R4553.......................... UOC:V53	1
11	PAFZZ	11083	3H1489	.KEY,WOODRUFF......................... UOC:V53	1
12	PAFZZ	11083	8S1925	.GEAR,HELICAL......................... UOC:V53	1
13	PAFZZ	96906	MS21044N6	.NUT,SELF-LOCKING,HE................ UOC:V53	1
14	XBFFF	11083	4N1120	.BODY ASSY,FUEL XFR................. UOC:V53	1
15	PAFZZ	11083	5P9295	..SEAL,PLAIN ENCASED PART OF KIT P/N 5R4553.......................... UOC:V53	1
16	PAFZZ	11083	5P9294	..SEAL,PLAIN ENCASED PART OF KIT P/N 5R4553.......................... UOC:V53	1
17	XBFZZ	11083	4N7357	..BEARING............................. UOC:V53	1
18	PAFZZ	11083	8H5804	..PIN,STRAIGHT,HEADLE............... UOC:V53	1
19	XBFZZ	11083	8F5186	..BUSHING............................. UOC:V53	1
20	PFFZZ	11083	7S4433	..SWAGING SLEEVE,WIRE............... UOC:V53	1
21	XAFZZ	11083	4N1121	..BODY................................ UOC:V53	1
22	PFFZZ	70040	5622759	..VALVE ASSEMBLY,FUEL............... UOC:V53	1

(1) ITEM NO	(2) SMR CODE	(3) CAGEC	(4) PART NUMBER	(5) DESCRIPTION AND USABLE ON CODES(UOC)	(6) QTY
23	XBFZZ	11083	4N1119	.GEAR,FUEL XFR PUMP.................. UOC:V53	1
24	XBFZZ	11083	4N1116	.SHAFT ASSY.......................... UOC:V53	1
25	PAFZZ	81349	M83248/2-905	.PACKING,PREFORMED PART OF KIT P/N 5R4553............................ UOC:V53	1
26	PFFZZ	50548	3K8460	PLUG, STR THD........................	1

END OF FIGURE

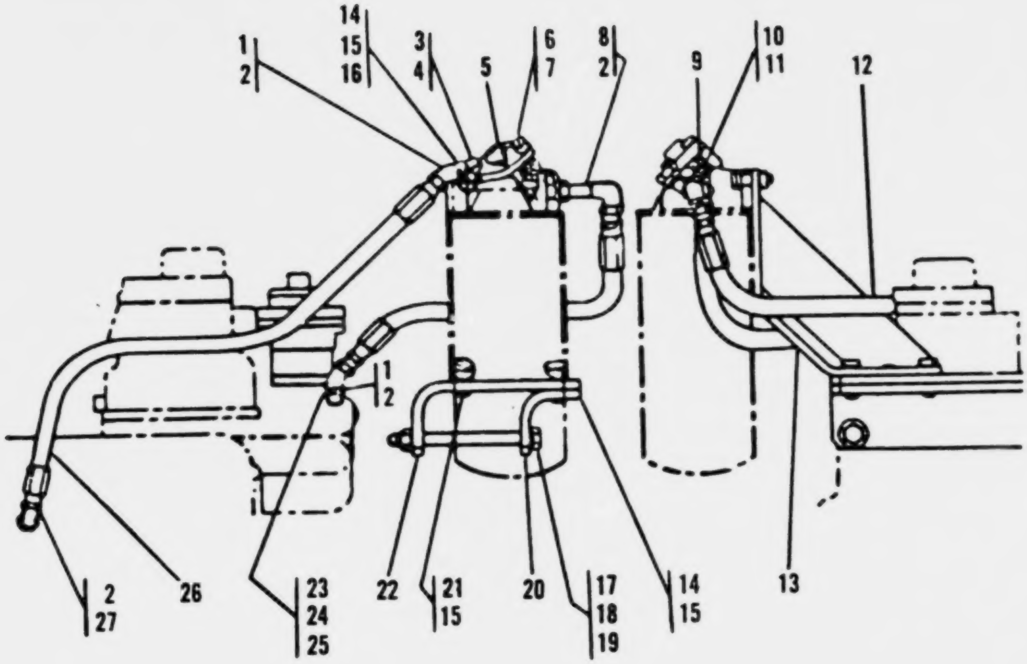

FIGURE 34. FUEL PUMP LINES

(1) ITEM NO	(2) SMR CODE	(3) CAGEC	(4) PART NUMBER	(5) DESCRIPTION AND USABLE ON CODES(UOC)	(6) QTY
				GROUP 0302: FUEL PUMPS	
				FIG. 34 FUEL PUMP LINES	
1	PAOZZ	11083	307942	ELBOW,TUBE TO BOSS.................... UOC:V53	2
2	PAOZZ	25184	906-737-70	PACKING,PREFORMED PART OF KIT P/N 5R4553.................................. UOC:V53	4
3	PAOZZ	11083	5P0537	WASHER.................................. UOC:V53	1
4	PAOZZ	80020	87750-25	BOLT,MACHINE.......................... UOC:V53	1
5	PAOZZ	11083	6N4414	COVER,FLUID FILTER.................... UOC:V53	1
6	PAOZZ	11083	1B2790	BOLT,MACHINE.......................... UOC:V53	1
7	PAOZZ	11083	9M1974	WASHER,FLAT........................... UOC:V53	1
8	PAOZZ	11083	2P7214	ELBOW,PIPE............................ UOC:V53	1
9	PAOZZ	11083	1P0436	GASKET PART OF KIT P/N 5R4553....... UOC:V53	1
10	XDOZZ	11083	15P2937	ADAPTER,RING TO PIP................. UOC:V53	1
11	PAOZZ	11083	3J7354	PACKING,PREFORMED PART OF KIT P/N 5R4553.................................. UOC:V53	1
12	PAOZZ	11083	9L5158	HOSE ASSEMBLY,NONME................. UOC:V53	1
13	XDOZZ	11083	6N5453	BRACKET,FUEL FLTR................... UOC:V53	1
14	PAOZZ	11083	0S1588	BOLT.................................... UOC:V53	4
15	PAOZZ	11083	5M2894	WASHER,FLAT........................... UOC:V53	8
16	PAOZZ	15564	1377A	NUT,PLAIN,HEXAGON................... UOC:V53	2
17	PAOZZ	11083	1D4572	SCREW................................... UOC:V53	2
18	PFFZZ	11083	2M849	WASHER,FLAT........................... UOC:V53	4
19	PAOZZ	96906	MS51967-14	NUT,PLAIN,HEXAGON................... UOC:V53	2
20	XDOZZ	11083	6N5454	BRACKET................................ UOC:V53	1
21	PAOZZ	11083	0L1351	BOLT,MACHINE.......................... UOC:V53	2
22	XDOZZ	11083	6N5455	BRACKET................................ UOC:V53	1
23	XDOZZ	79470	103-20084	ADAPTER,ORIFICED..................... UOC:V53	1

(1) ITEM NO	(2) SMR CODE	(3) CAGEC	(4) PART NUMBER	(5) DESCRIPTION AND USABLE ON CODES(UOC)	(6) QTY
24	PAOZZ	11083	2N1287	ELBOW,PIPE TO TUBE.................. UOC:V53	1
25	PAOZZ	11083	5M6214	PLUG,PIPE.......................... UOC:V53	1
26	PAOZZ	11083	9L6958	HOSE ASSEMBLY,NONME................ UOC:V53	1
27	PAOZZ	96906	MS51525-A6	ADAPTER,STRAIGHT,TU................ UOC:V53	1

END OF FIGURE

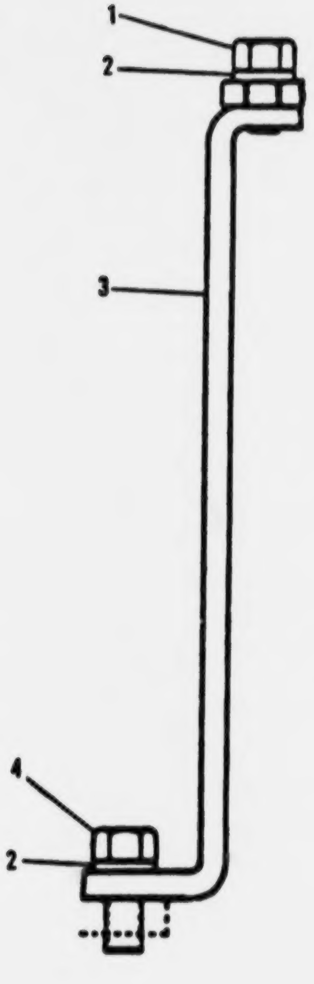

FIGURE 35. FUEL LINES FASTENER ASSEMBLY

(1) ITEM NO	(2) SMR CODE	(3) CAGEC	(4) PART NUMBER	(5) DESCRIPTION AND USABLE ON CODES(UOC)	(6) QTY
				GROUP 0302: FUEL PUMPS	
				FIG. 35 FUEL LINES FASTENER ASSEMBLY	
1	PAOZZ	96906	MS18154-58	SCREW,CAP,HEXAGON H................ UOC:V53	2
2	PAOZZ	11083	5M2894	WASHER,FLAT........................ UOC:V53	4
3	XDOZZ	11083	6N1671	BRACKET............................ UOC:V53	1
4	PAOZZ	11083	0S1571	SCREW,CAP,HEXAGON H................ UOC:V53	2

END OF FIGURE

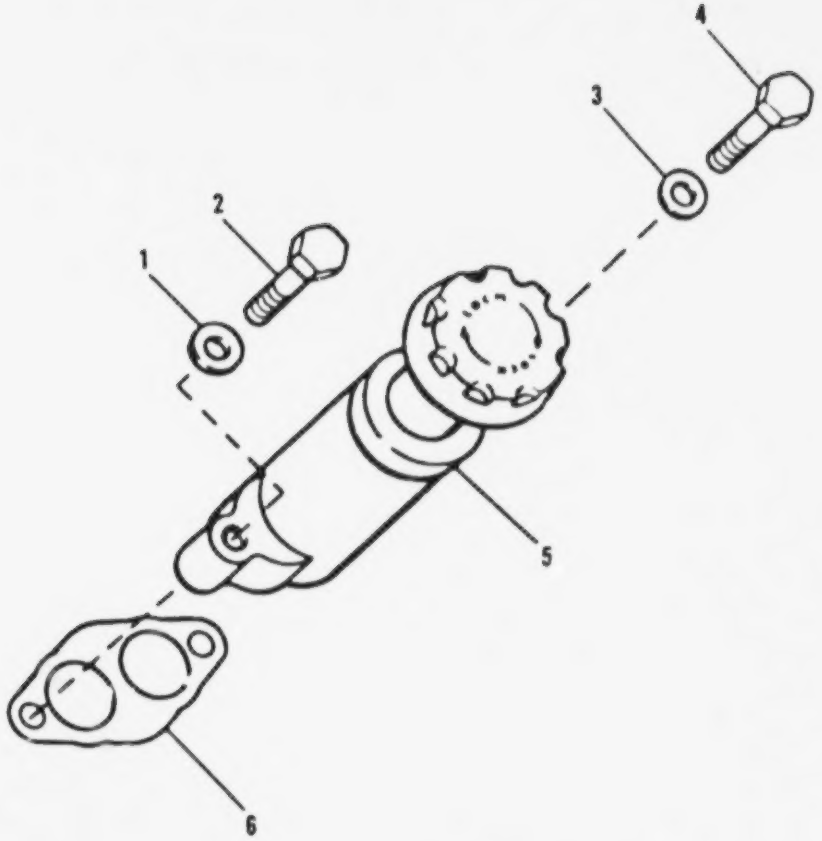

FIGURE 36. FUEL PRIMING PUMP ASSEMBLY

(1) ITEM NO	(2) SMR CODE	(3) CAGEC	(4) PART NUMBER	(5) DESCRIPTION AND USABLE ON CODES(UOC)	(6) QTY
				GROUP 0302: FUEL PUMPS	
				FIG. 36 FUEL PRIMING PUMP ASSEMBLY	
1	PAOZZ	11083	9M1974	WASHER,FLAT........................... UOC:V53	1
2	PAOZZ	11083	1B2790	BOLT,MACHINE.......................... UOC:V53	1
3	PAOZZ	11083	5P0537	WASHER................................ UOC:V53	1
4	PAOZZ	80020	87750-25	BOLT,MACHINE.......................... UOC:V53	1
5	PBOZZ	11083	4N2511	PUMP,ENGINE PRIMING................... UOC:V53	1
6	PAOZZ	11083	1P0436	GASKET................................ UOC:V53	1

END OF FIGURE

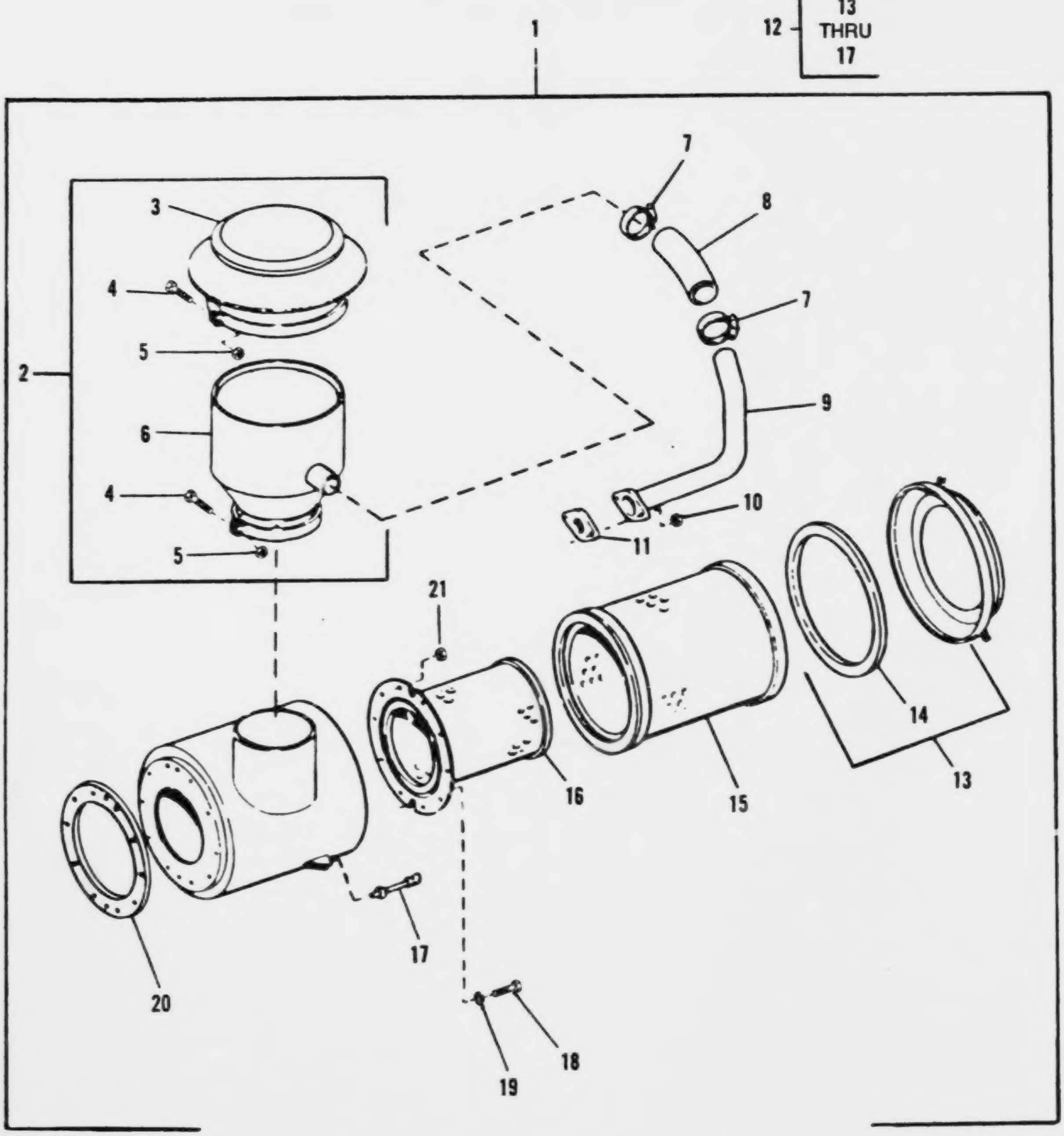

FIGURE 37. AIR CLEANER AND DUSTER EJECTOR ASSEMBLY

(1) ITEM NO	(2) SMR CODE	(3) CAGEC	(4) PART NUMBER	(5) DESCRIPTION AND USABLE CN CODES(UOC)	(6) CTY
				GRCLP 0304: AIR CLEANEF	
				FIC. 37 AIR CLEANER ANC DUST EJECTOR ASSEMBLY	
1	XDCCO	11C83	4N6849	CLEANER GRP,AIR...................... UCC:V53	1
2	PFOOO	18265	PCHOC-1184	.AIR CLEANER,INTAKE................. UCC:V53	1
3	XDOZZ	11C83	7S3687	..HCCD ASSY......................... UOC:V53	1
4	PAOZZ	11083	0S1591	..SCREW............................. UCC:V53	2
5	PAOZZ	15564	1377A	..NUT,PLAIN,HEXAGON................. UOC:V53	2
6	XAOZZ	11C83	7N5973	..BCDY ASSY......................... UOC:V53	1
7	XDOZZ	08484	HTM250L	.CLAMP,HCSE......................... UOC:V53	2
8	PAOZZ	24161	4625-8506	.HCSE,PREFORMED..................... UOC:V53	1
9	XDOZZ	11C83	6N1519	.TUBE ASSY.......................... UCC:V53	1
10	PAOZZ	11083	1B5355	.NUT,PLAIN,HEXAGON.................. UCC:V53	2
11	XDOZZ	11C83	9S1572	.ADAPTER............................ UOC:V53	1
12	XDCOO	18265	EGB14-0C12	.CLEANER ASSY,AIR................... UOC:V53	1
13	XACOO	18265	P12-C391	..CUP ASSY.......................... UCC:V53	1
14	PAOZZ	18265	P12-C388	...PACKING,PREFORMEC................ UCC:V53	1
15	PAOZZ	11C83	7W5313	..FILTER ELEMENT,INTA............... UOC:V53	1
16	PAOZZ	11083	1P8482	..FILTER ELEMENT,INTA............... UOC:V53	1
17	PFOZZ	11C83	9M3695	..RCD ASSEMBLY...................... UOC:V53	2
18	PAOZZ	11083	1T822	.BCLT,MACHINE....................... UCC:V53	2
19	PAOZZ	11C83	5M2894	.WASHER,FLAT........................ UCC:V53	2
20	PAOZZ	11083	1P9390	.GASKET............................. UCC:V53	1
21	PAOZZ	11C83	2K4973	.LCCKNUT............................ UOC:V53	10

END OF FIGURE

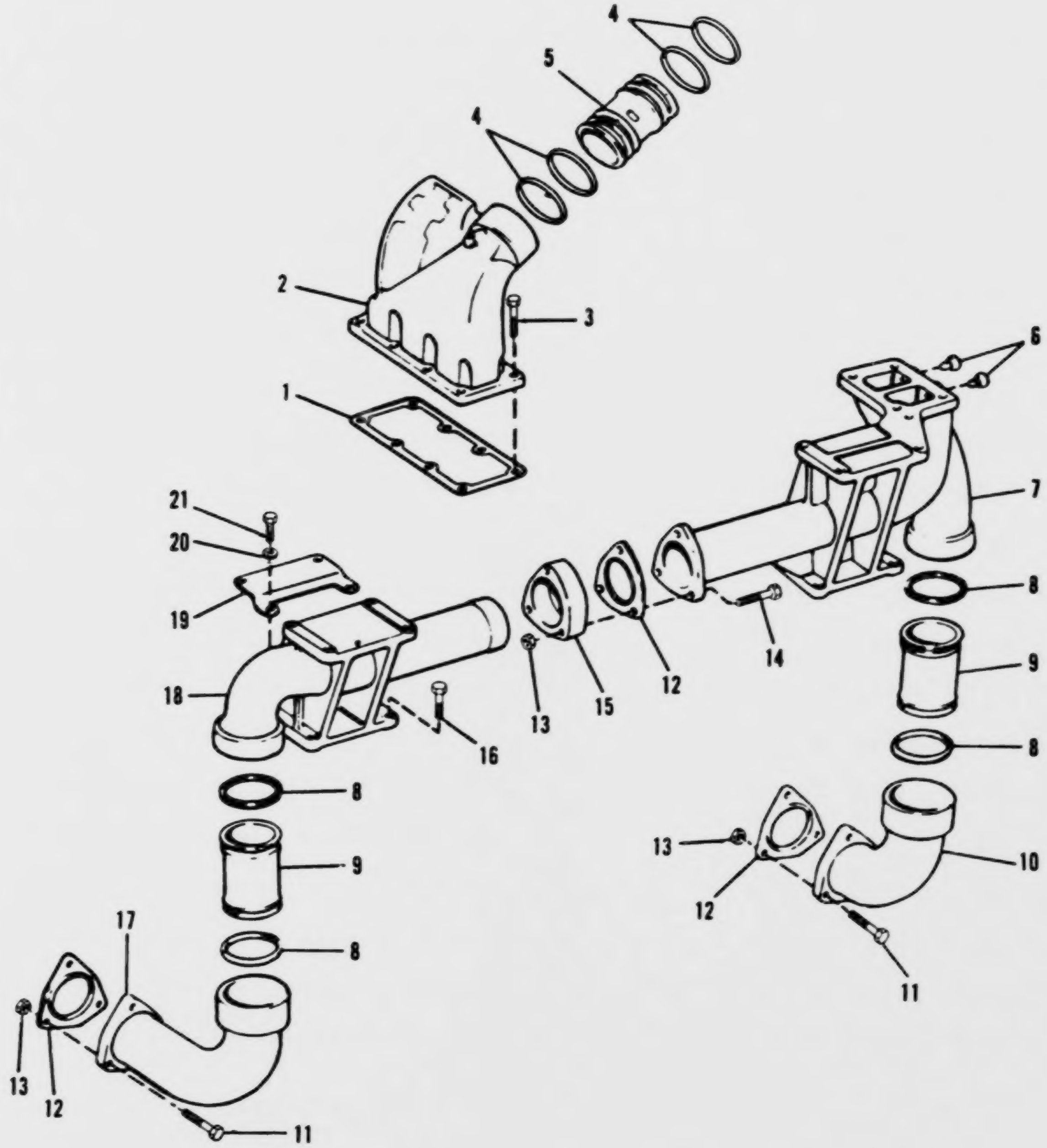

FIGURE 38. TURBOCHARGER AIR LINES

(1) ITEM NO	(2) SMR CODE	(3) CAGEC	(4) PART NUMBER	(5) DESCRIPTION AND USABLE ON CODES(UOC)	(6) QTY
				GROUP 0305: TURBOCHARGER AIR LINES	
				FIG. 38 TURBOCHARGER AIR LINES	
1	PAFZZ	11083	4N1848	GASKET PART OF KIT P/N 5R4553....... UOC:V53	1
2	XBFZZ	11083	8N1845	ELBOW................................ UOC:V53	1
3	PAFZZ	11083	0S1588	BOLT................................. UOC:V53	6
4	PAFZZ	11083	4L8337	PACKING,PREFORMED PART OF KIT P/N 5R4553............................... UOC:V53	4
5	XBFZZ	11083	4N1849	PIPE,AIR............................. UOC:V53	1
6	PAFZZ	44940	502-C153	PLUG,PIPE............................ UOC:V53	2
7	XBFZZ	11083	4N6971	MANIFOLD,TURBO MT.................... UOC:V53	1
8	XBFZZ	11083	6N4651	SEAL RING,METAL...................... UOC:V53	4
9	PFFZZ	11083	6N4597	FLANGE,EXHAUST PIPE.................. UOC:V53	2
10	XBFZZ	11083	4N6900	ELBOW,EXH............................ UOC:V53	1
11	PAFZZ	11083	8M2295	BOLT,MACHINE......................... UOC:V53	6
12	PAFZZ	11083	8N2431	GASKET............................... UOC:V53	3
13	PAFZZ	11083	8M2296	NUT,PLAIN,HEXAGON.................... UOC:V53	9
14	PAFZZ	11083	5P3345	SCREW,CAP,HEXAGON H.................. UOC:V53	3
15	XBFZZ	11083	6N1565	COLLAR............................... UOC:V53	1
16	PAFZZ	11083	1A2029	BOLT,MACHINE......................... UOC:V53	6
17	XBFZZ	11083	4N6970	ELBOW,EXH............................ UOC:V53	1
18	XBFZZ	11083	4N6926	MANIFOLD,CROSSOVER................... UOC:V53	1
19	XBFZZ	11083	8N4056	BRACKET ASSY......................... UOC:V53	1
20	PAFZZ	11083	5M2894	WASHER,FLAT.......................... UOC:V53	2
21	PAFZZ	96906	MS90728-63	SCREW,CAP,HEXAGON H.................. UOC:V53	2

END OF FIGURE

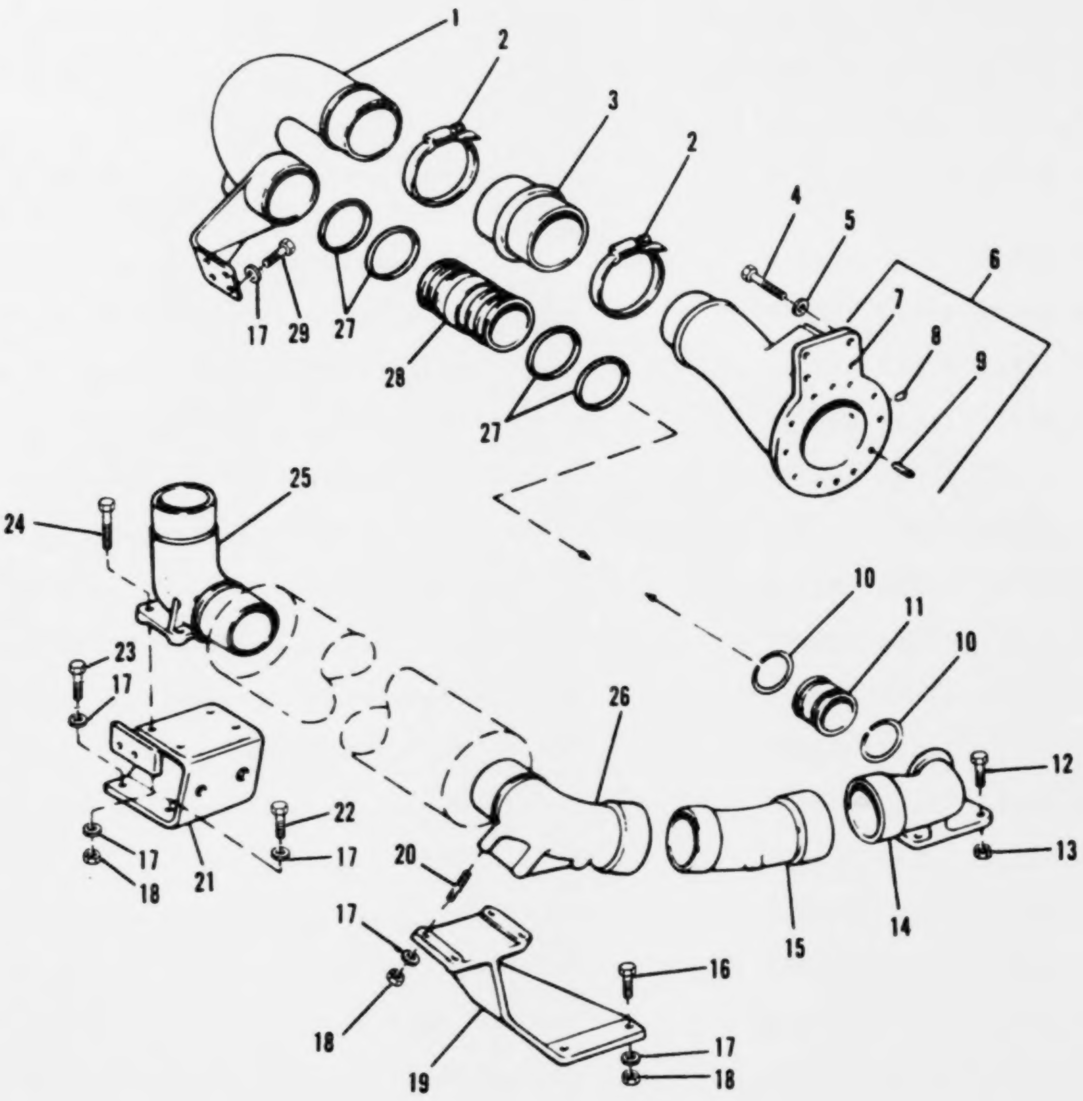

FIGURE 39. TURBOCHARGER EXHAUST LINES

(1) ITEM NO	(2) SMR CODE	(3) CAGEC	(4) PART NUMBER	(5) DESCRIPTION AND USABLE ON CODES(UOC)	(6) QTY
				GROUP 0305: TURBOCHARGER EXHAUST LINES	
				FIG. 39 TURBOCHARGER EXHAUST LINES	
1	XBFZZ	11083	4N2494	ELBOW,COMP INLET.................... UOC:V53	1
2	PAFZZ	11083	5P3860	CLAMP,HOSE.......................... UOC:V53	2
3	PAFZZ	11083	9S2592	HOSE,PREFORMED...................... UOC:V53	2
4	PAFZZ	11083	0S1595	BOLT,MACHINE........................ UOC:V53	4
5	PFFZZ	11083	2M849	WASHER,FLAT......................... UOC:V53	4
6	XBFHH	11083	1V6566	PIPE ASSY,AIR XFR................... UOC:V53	1
7	XBFZZ	11083	1V6565	.PIPE............................... UOC:V53	1
8	PAFZZ	11083	7M1674	.STRAINER ELEMENT,SE................ UOC:V53	1
9	PAFZZ	19207	10935241	.STUD,PLAIN......................... UOC:V53	10
10	PAFZZ	11083	5L8854	RING,PISTON......................... UOC:V53	2
11	XBFZZ	11083	9L5839	COUPLING,TURBO EXHA................. UOC:V53	1
12	PAFZZ	11083	2N2765	BOLT................................ UOC:V53	4
13	PAFZZ	11083	2N2766	NUT,PLAIN,HEXAGON................... UOC:V53	4
14	XBFZZ	11083	6N4249	ELBOW,TURBO OUTLET.................. UOC:V53	1
15	XBHZZ	11083	6N4247	ELBOW,EXHAUST....................... UOC:V53	1
16	PAFZZ	11083	2A4639	BOLT,MACHINE........................ UOC:V53	4
17	PAFZZ	11083	5M2894	WASHER,FLAT......................... UOC:V53	20
18	PAFZZ	11083	1B5355	NUT,PLAIN,HEXAGON................... UOC:V53	12
19	XBFZZ	11083	6N4248	BRACKET............................. UOC:V53	1
20	PAFZZ	19207	539023	STUD,CONTINUOUS THR................. UOC:V53	4
21	XBFZZ	11083	8N5527	BRACKET ASSY,EXH EL................. UOC:V53	1
22	PAFZZ	11083	0S1594	BOLT,MACHINE........................ UOC:V53	2
23	PAFZZ	96906	MS90728-63	SCREW,CAP,HEXAGON H................. UOC:V53	2
24	PAFZZ	11083	0S1591	SCREW...............................	4

(1) ITEM NO	(2) SMR CODE	(3) CAGEC	(4) PART NUMBER	(5) DESCRIPTION AND USABLE ON CODES(UOC)	(6) QTY
				UOC:V53	
25	XBFZZ	11083	4N2493	ELBOW,EXHAUST........................ UOC:V53	1
26	XBFZZ	11083	7N0694	ELBOW,MUFFLER INLET.................. UOC:V53	1
27	PAFZZ	11083	2M5173	PACKING,PREFORMED PART OF KIT P/N 5R4553............................. UOC:V53	4
28	XBFZZ	11083	9M1869	PIPE,AIR XFR......................... UOC:V53	1
29	PAFZZ	11083	1A2029	BOLT,MACHINE......................... UOC:V53	4

END OF FIGURE

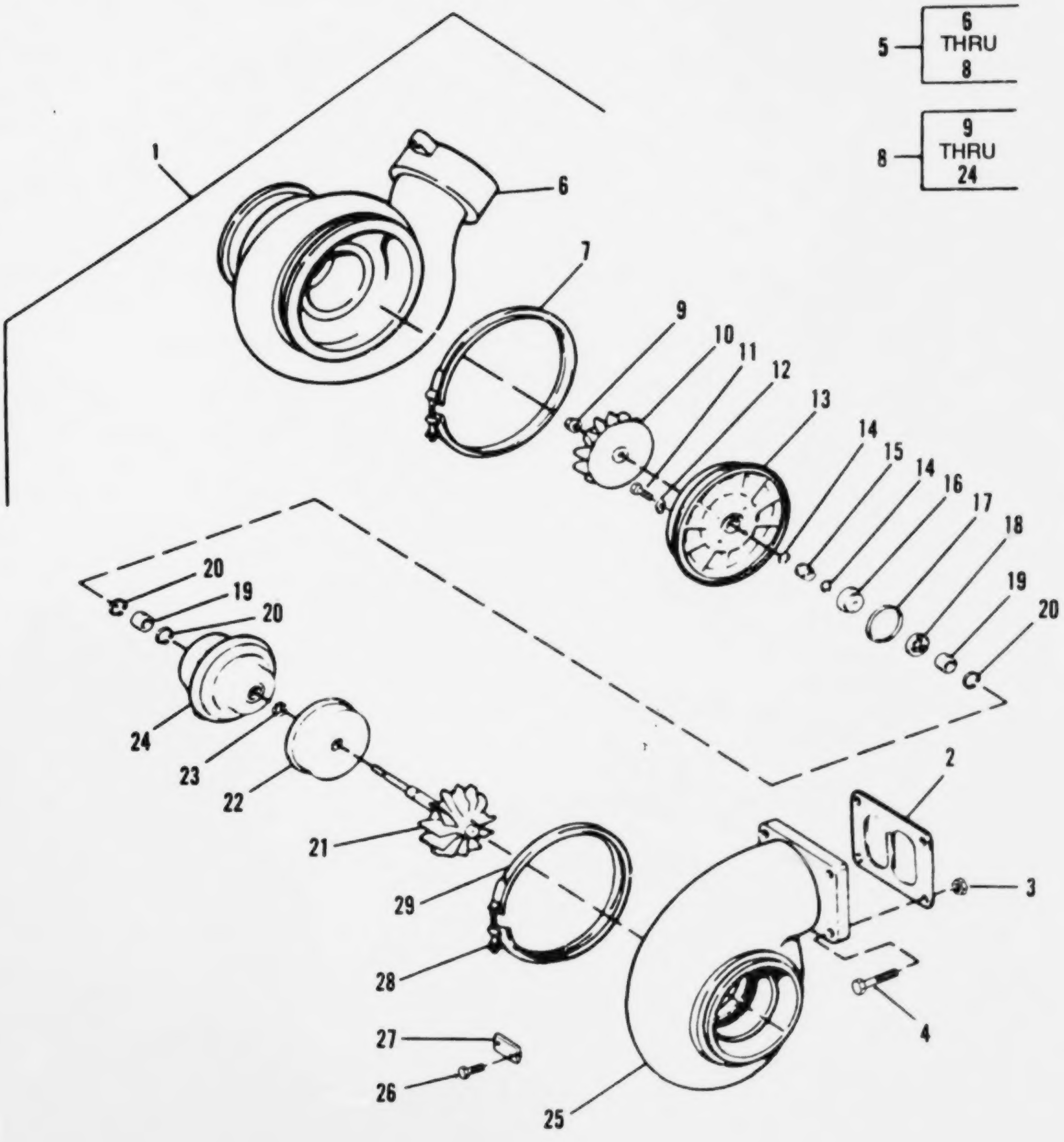

FIGURE 40. TURBOCHARGER ASSEMBLY

(1) ITEM NO	(2) SMR CODE	(3) CAGEC	(4) PART NUMBER	(5) DESCRIPTION AND USABLE ON CODES(UOC)	(6) QTY
				GROUP 03C5: TURBOCHARGER ASSEMBLY	
				FIG. 40 TURBOCHARGER ASSEMBLY	
1	XDFHH	11083	5R4438	TURBOCHARGER GRP.................. UOC:V53	1
2	PAHZZ	11083	1S4295	.GASKET.......................... UOC:V53	1
3	PAHZZ	11083	2N2766	.NUT,PLAIN,HEXAGON............... UOC:V53	4
4	PAHZZ	11083	5P7128	.SCREW,CAP,HEXAGON H............. UOC:V53	4
5	PBFZZ	08179	465694-5002	TURBOSUPERCHARGER,N.............. UOC:V53	1
6	XAHZZ	08179	408359-5	..HOUSING,COMPRESSOR............. UOC:V53	1
7	XBHZZ	08179	400560-775	..COUPLING,V-BAND................ UOC:V53	1
8	XBHZZ	08179	408742-53	..CARTRIDGE...................... UOC:V53	1
9	PAHZZ	11083	1S1770	...NUT,SELF-LOCKING,EX........... UOC:V53	1
10	XBHZZ	08179	408463-6	...WHEEL,COMPRESSOR.............. UOC:V53	1
11	PFHZZ	53711	5979393-1	...SCREW,CAP,HEXAGON H........... UOC:V53	4
12	XBHZZ	08179	408597	...WASHER,KEY.................... UOC:V53	4
13	XBHZZ	08179	408487-2	...BACKPLATE..................... UOC:V53	1
14	PAHZZ	70210	403818	...RING,TURBOCHARGER............. UOC:V53	2
15	PFHZZ	08179	408768-1	...SPACER,SLEEVE................. UOC:V53	1
16	KFHZZ	08179	404470	...RING,THRUST PART OF KIT P/N 5R4553............................ UOC:V53	1
17	PAHZZ	08179	400424	...RING,SEAL..................... UOC:V53	1
18	PAHZZ	70210	408593	...BEARING,WASHER,THRU........... UOC:V53	1
19	PAFZZ	08179	408906	BEARING,TURB,CART................ UOC:V53	1
20	PAHZZ	79136	5008-100	...RING,RETAINING................ UOC:V53	3
21	XBHZZ	08179	408492-14	...SHAFT & WHEEL ASSY............ UOC:V53	1
22	XBHZZ	08179	409794	...SHROUD,TURBINE WHEE........... UOC:V53	1
23	PFHZZ	08179	408049-4	...RING,PISTON................... UOC:V53	1
24	XAHZZ	08179	408495-10	...HOUSING,TURBOCHARGE...........	1

(1) ITEM NO	(2) SMR CODE	(3) CAGEC	(4) PART NUMBER	(5) DESCRIPTION AND USABLE ON CODES(UOC)	(6) QTY
				UOC:V53	
25	XAHZZ	08179	408804-35	..HOUSING,TURBINE................... UOC:V53	1
26	PAHZZ	11083	2F808	..SCREW............................. UOC:V53	2
27	XBHZZ	08179	408864-C	..NAMEPLATE......................... UOC:V53	1
28	PAHZZ	11083	7M9918	..NUT,SELF-LOCKING,DC............... UOC:V53	2
29	PFFZZ	08179	DIV-400579-560	..CLAMP,V,TURBINE................... UOC:V53	1

END OF FIGURE

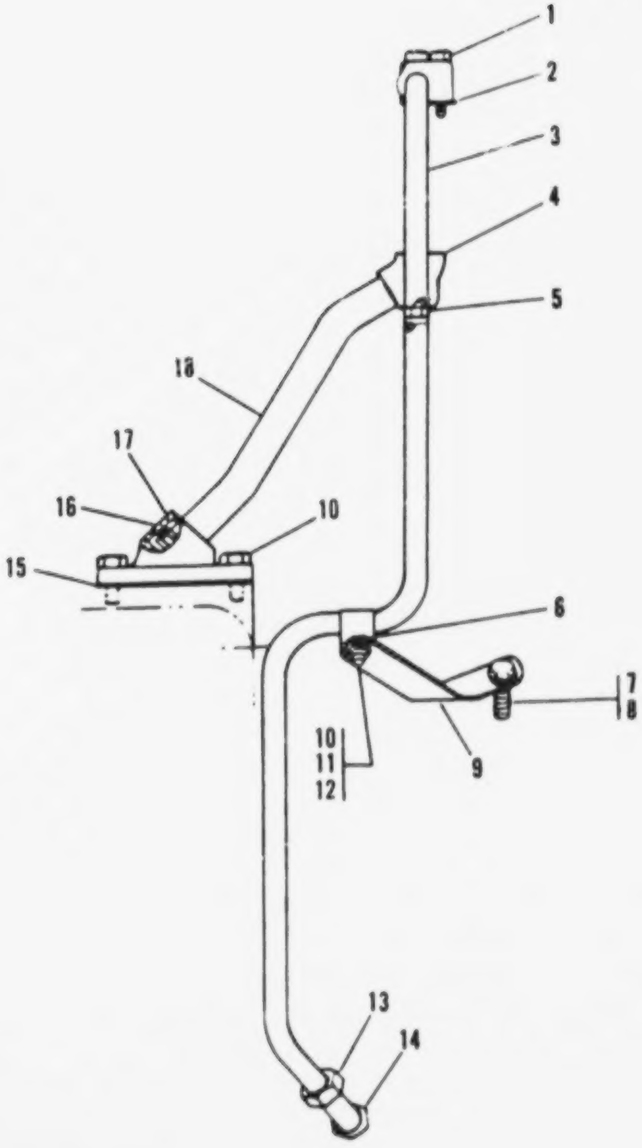

FIGURE 41. TURBOCHARGER OIL LINES

(1) ITEM NO	(2) SMR CODE	(3) CAGEC	(4) PART NUMBER	(5) DESCRIPTION AND USABLE ON CODES(UOC)	(6) QTY
				GROUP 0305: TURBOCHARGER OIL LINES	
				FIG. 41 TURBOCHARGER OIL LINES	
1	PAHZZ	11083	0S1571	BOLT.. UOC:V53	2
2	PAHZZ	11083	1S6555	GASKET PART OF KIT P/N 5R4553 PART OF KIT P/N 5P9972.................. UOC:V53	2
3	XBHZZ	11083	7N2650	TUBE ASSY.................................. UOC:V53	1
4	PAHZZ	11083	1S4810	GASKET PART OF KIT P/N 5R4553 PART OF KIT P/N 5P9843.................. UOC:V53	1
5	PAHZZ	11083	L2070	BOLT,MACHINE............................ UOC:V53	2
6	PFHZZ	11083	2H1743	CLAMP LOOP............................... UOC:V53	1
7	PAHZZ	11083	1A9579	BOLT,MACHINE............................ UOC:V53	1
8	PAHZZ	11083	9M1974	WASHER,FLAT............................. UOC:V53	1
9	XBHZZ	11083	6N4728	BRACKET.................................... UOC:V53	1
10	PAHZZ	11083	0S1594	BOLT,MACHINE............................ UOC:V53	3
11	PAHZZ	11083	5M2894	WASHER,FLAT............................. UOC:V53	2
12	PAHZZ	15564	1377A	NUT,PLAIN,HEXAGON...................... UOC:V53	1
13	XBHZZ	11083	6M7476	ELBOW.. UOC:V53	1
14	PAHZZ	81349	M83248/2-910	PACKING,PREFORMED PART OF KIT P/N 5R4553.................................. UOC:V53	1
15	PAHZZ	11083	4N6672	GASKET PART OF KIT P/N 6V2978....... UOC:V53	1
16	PAHZZ	11083	9M4849	SEAL,RING PART OF KIT P/N 5R4553 PART OF KIT P/N 6V236 PART OF KIT P/N 5P9972........................... UOC:V53	1
17	XBHZZ	11083	4N9431	ELBOW.. UOC:V53	1
18	XBHZZ	11083	7N2652	TUBE ASSY.................................. UOC:V53	1

END OF FIGURE

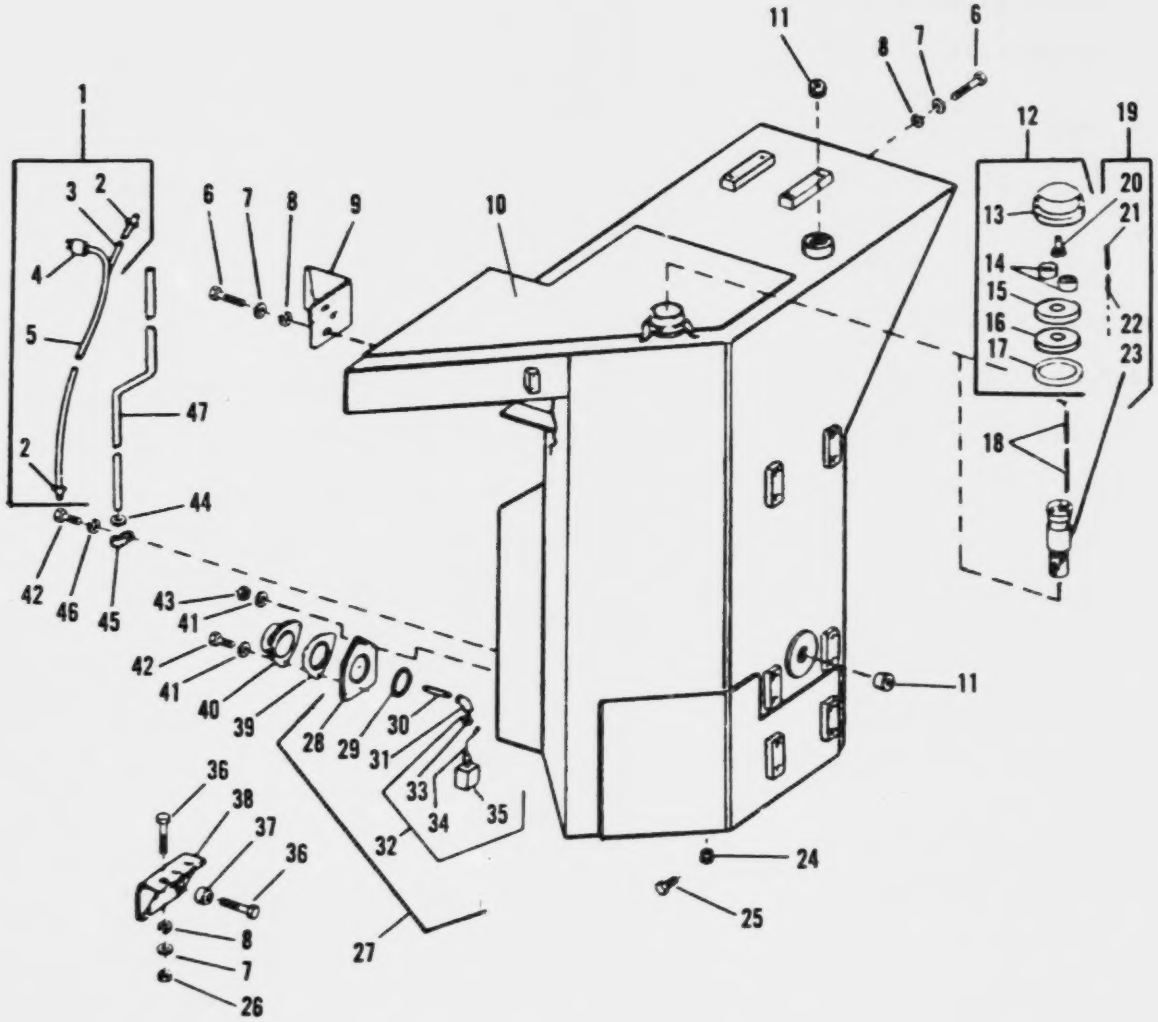

FIGURE 42. FUEL TANK AND SWITCHES

(1) ITEM NO	(2) SMR CODE	(3) CAGEC	(4) PART NUMBER	(5) DESCRIPTION AND USABLE ON CODES(UOC)	(6) QTY
				GROUP 0306: TANKS, LINES	
				FIG. 42 FUEL TANK AND SWITCHES	
1	PAFZZ	11083	1V9375	WIRING HARNESS,BRAN.................. UOC:V53	1
2	PAFZZ	11083	4S1988	.TERMINAL........................ UOC:V53	2
3	PAFZZ	11083	5P668	.WIRE,ELECTRICAL................. UOC:V53	1
4	PFFZZ	79550	19191	.CONNECTOR,PLUG,ELEC............. UOC:V53	1
5	PAFZZ	11083	5P7030	.WIRE,ELECTRICAL................. UOC:V53	1
6	PAFZZ	11083	S1566	BOLT,MACHINE..................... UOC:V53	9
7	PAFZZ	11083	4D3704	WASHER,FLAT...................... UOC:V53	12
8	PAFZZ	11083	5S581	WASHER,FLAT...................... UOC:V53	12
9	XBHZZ	11083	1V2708	BRACKET ASSY..................... UOC:V53	1
10	XBFFF	11083	4V6323	TANK ASSY,FUEL................... UOC:V53	1
11	PAOZZ	11083	4H9027	PLUG,PIPE........................ UOC:V53	2
12	PFOZZ	11083	3M1588	CAP,FILLER OPENING............... UOC:V53	1
13	XAOZZ	11083	3M1836	.CAP,FUEL TANK................... UOC:V53	1
14	PAOZZ	11083	4B5949	.STRAINER,FUEL CAP............... UOC:V53	2
15	PAOZZ	11083	4B5423	.GASKET.......................... UOC:V53	1
16	XDOZZ	11083	3M1837	.BAFFLE,GASKET................... UOC:V53	1
17	PAOZZ	11083	2A1763	.GASKET.......................... UOC:V53	1
18	XDOZZ	11083	1V9808	PLUNGER,FUEL TANK................ UOC:V53	1
19	PAOZZ	11083	3M1339	STRAINER ASSEMBLY,E.............. UOC:V53	1
20	PAOZZ	11083	9F9958	.SCREW,EXTERNALLY RE............. UOC:V53	1
21	PAOZZ	34895	10118820	.PIN,COTTER...................... UOC:V53	1
22	PAOZZ	11083	9F9959	.CHAIN,WELDLESS.................. UOC:V53	1
23	PAOZZ	56620	41400	.FILTER ELEMENT,FLUI............. UOC:V53	1
24	PAOZZ	11083	3B0551	PLUG,PIPE........................ UOC:V53	1

(1) ITEM NO	(2) SMR CODE	(3) CAGEC	(4) PART NUMBER	(5) DESCRIPTION AND USABLE ON CODES(UOC)	(6) QTY
25	PAFZZ	11083	1H83C6	SCREW FUEL TANK.................... UOC:V53	1
26	PAFZZ	27315	2045V007	NUT,PLAIN,HEXAGON.................. UOC:V53	3
27	AFFFF	11083	2V9095	SWITCH ASSY........................ UOC:V53	2
28	PFFZZ	11083	1V2751	.FLANGE,SWITCH,TANK................ UOC:V53	1
29	PAFZZ	11083	1H8720	.PACKING,PREFORMED................. UOC:V53	2
30	PFFZZ	11083	3B7275	.NIPPLE,PIPE....................... UOC:V53	1
31	XDFZZ	11083	038747	.ELBOW,90 DEG,PIPE................. UOC:V53	1
32	PAFZZ	11083	4V6205	.SWITCH,STEPPING................... UOC:V53	1
33	PFFZZ	11083	4M5317	..BUSHING,REDUCER.................. UOC:V53	1
34	PAFZZ	11083	4L3916	..TERMINAL,QUICK DISC.............. UOC:V53	1
35	XDFZZ	7187C	33520	..SWITCH,LIQUID LEVEL.............. UOC:V53	1
36	PAFZZ	11083	8S9092	BOLT,MACHINE....................... UOC:V53	7
37	PAFZZ	11083	6K9800	SPACER,SLEEVE...................... UOC:V53	4
38	XBFZZ	11083	1V2709	BRACKET ASSY....................... UOC:V53	1
39	PAFZZ	11083	9H8890	GASKET............................. UOC:V53	2
40	PAFZZ	11083	1V9373	COVER,ACCESS....................... UOC:V53	2
41	PFFZZ	11083	4B4278	WASHER,FLAT........................ UOC:V53	12
42	PAFZZ	96906	MS18154-58	SCREW,CAP,HEXAGON H................ UOC:V53	8
43	PAFZZ	15564	1377A	NUT,PLAIN,HEXAGON.................. UOC:V53	6
44	PAFZZ	11083	7K6416	GROMMET,NONMETALLIC................ UOC:V53	2
45	PAFZZ	11083	4B9302	CLIP............................... UOC:V53	2
46	PAFZZ	96906	MS35338-45	WASHER,LOCK........................ UOC:V53	2
47	XBFZZ	11083	2V9062	TUBE,STL........................... UOC:V53	1

END OF FIGURE

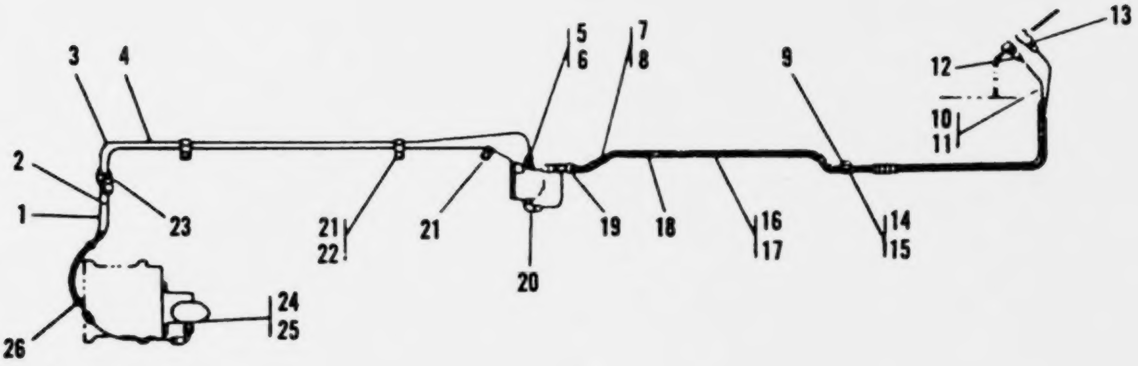

FIGURE 43. FUEL LINES

(1) ITEM NO	(2) SMR CODE	(3) CAGEC	(4) PART NUMBER	(5) DESCRIPTION AND USABLE ON CODES(UOC)	(6) QTY
				GROUP 0306: FUEL LINES	
				FIG. 43 FUEL LINES	
1	XDOOO	11083	3V0612	HOSE ASSY.......................... UOC:V53	1
2	XDOOO	11083	3V0611	HOSE ASSY.......................... UOC:V53	1
3	XDOOO	11083	3V0609	TUBE ASSY.......................... UOC:V53	1
4	XDOOO	11083	3V0610	TUBE ASSY.......................... UOC:V53	1
5	PFOZZ	11083	6K3607	ADAPTER,STRAIGHT,TU................ UOC:V53	1
6	PAOZZ	81349	M83248/2-910	PACKING,PREFORMED PART OF KIT P/N 5R4553............................ UOC:V53	1
7	XDOOO	11083	3V0608	TUBE ASSY.......................... UOC:V53	1
8	XDOOO	11083	5V1279	TUBE ASSY.......................... UOC:V53	1
9	XDOZZ	11083	8S9575	SLEEVE............................. UOC:V53	1
10	XDOOO	11083	3V0603	TUBE ASSY.......................... UOC:V53	1
11	XDOOO	11083	3V0604	TUBE ASSY.......................... UOC:V53	1
12	PAOZZ	11083	8M0755	ADAPTER,STRAIGHT,PI................ UOC:V53	1
13	PAOOZ	96906	MS51500A8-8	ADAPTER,STRAIGHT,PI................ UOC:V53	1
14	PAOZZ	96906	MS35338-45	WASHER,LOCK........................ UOC:V53	4
15	PAOZZ	96906	MS90728-63	SCREW,CAP,HEXAGON H................ UOC:V53	1
16	XDOOO	11083	3V0605	TUBE ASSY.......................... UOC:V53	1
17	XDOOO	11083	3V0606	TUBE ASSY.......................... UOC:V53	1
18	PFOZZ	11083	3R2704	ADAPTER,BLADE...................... UOC:V53	5
19	PAOZZ	11083	4D9517	CLIP,OIL FILL...................... UOC:V53	4
20	PFOZZ	96906	MS51504A8	ELBOW,PIPE TO TUBE................. UOC:V53	1
21	PAOZZ	11083	8M2770	CLAMP,LOOP......................... UOC:V53	5
22	PAOZZ	96906	MS18154-58	SCREW,CAP,HEXAGON H................ UOC:V53	3
23	XDOZZ	11083	616740	CONNECTOR.......................... UOC:V53	1
24	PAOZZ	25184	906-737-70	PACKING,PREFORMED..................	1

(1) ITEM NO	(2) SMR CODE	(3) CAGEC	(4) PART NUMBER	(5) DESCRIPTION AND USABLE ON CODES(UOC)	(6) QTY
				UOC:V53	
25	PFOZZ	11083	8M0506	CONNECTOR..............................	1
				UOC:V53	
26	PAOZZ	96906	MS3367-5-0	STRAP,TIEDOWN,ELECT..................	2
				UOC:V53	

END OF FIGURE

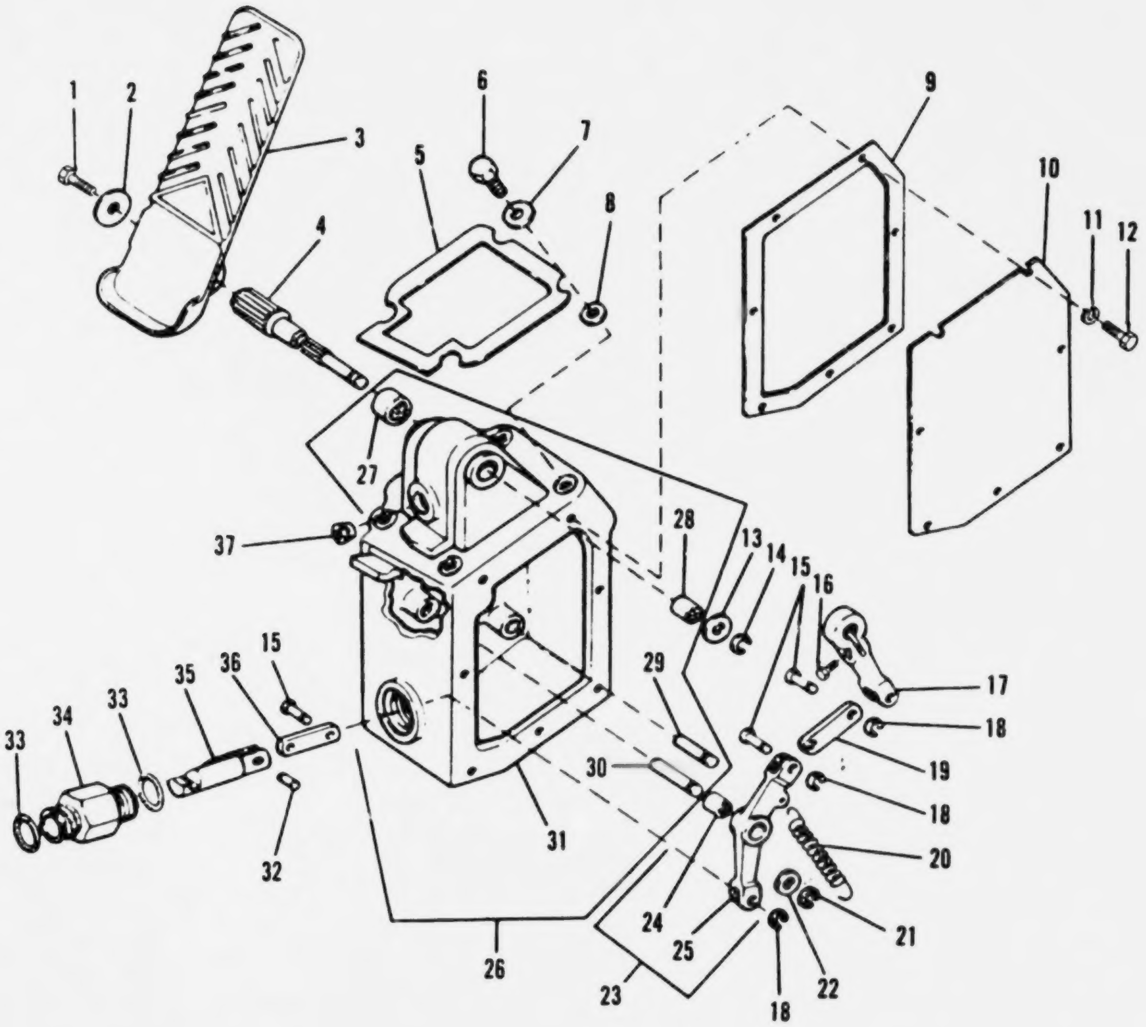

FIGURE 44. GOVERNOR CONTROL

(1) ITEM NO	(2) SMR CODE	(3) CAGEC	(4) PART NUMBER	(5) DESCRIPTION AND USABLE ON CODES(UOC)	(6) QTY
				GROUP 0308: ENGINE SPEED GOVERNOR AND CONTROLS	
				FIG. 44 GOVERNOR CONTROL	
1	PAFZZ	11083	T642	BOLT,MACHINE.............................. UOC:V53	1
2	PAFZZ	24617	664288	WASHER,FLAT............................... UOC:V53	1
3	XDFZZ	11083	4V9875	TREADLE................................... UOC:V53	1
4	XDFZZ	11083	2V2065	SHAFT..................................... UOC:V53	1
5	PAFZZ	11083	2V2156	GASKET.................................... UOC:V53	1
6	PAFZZ	11083	0S1594	BOLT,MACHINE.............................. UOC:V53	4
7	PAFZZ	11083	5P1075	WASHER,SQUARE CONE........................ UOC:V53	4
8	PAFZZ	12204	853661	WASHER,FLAT............................... UOC:V53	4
9	PAFZZ	11083	2V2158	GASKET.................................... UOC:V53	1
10	XDFZZ	11083	2V2157	COVER..................................... UOC:V53	1
11	XDFZZ	83355	1-4INNVYLKWASH	WASHER,LOCK............................... UOC:V53	7
12	PAFZZ	96906	MS90728-5	SCREW,CAP,HEXAGON H....................... UOC:V53	7
13	PAFZZ	11083	7S9203	WASHER,FLAT............................... UOC:V53	1
14	PAFZZ	11083	3K9042	RING,RETAINING............................ UOC:V53	1
15	PAFZZ	11083	8D5295	PIN....................................... UOC:V53	3
16	PAFZZ	96906	MS90726-6	SCREW,CAP,HEXAGON H....................... UOC:V53	1
17	XDFZZ	11083	2V0018	LEVER..................................... UOC:V53	1
18	PAFZZ	96906	MS16633-1025	RING,RETAINING............................ UOC:V53	3
19	XDFZZ	11083	2V2098	LINK...................................... UOC:V53	1
20	XDFZZ	11083	2V2155	SPRING.................................... UOC:V53	1
21	PAFZZ	79136	5133-37	RING,RETAINING............................ UOC:V53	1
22	PAFZZ	11083	5M1822	WASHER.................................... UOC:V53	2
23	XDFFF	11083	2V2152	LEVER ASSY................................ UOC:V53	1
24	XDFZZ	11083	3K6325	.BEARING..................................	1

(1) ITEM NO	(2) SMR CODE	(3) CAGEC	(4) PART NUMBER	(5) DESCRIPTION AND USABLE ON CODES(UOC)	(6) QTY
				UOC:V53	
25	XAFZZ	11083	1V9740	.LEVER............................. UOC:V53	1
26	XDFFF	11083	2V2161	HOUSING ASSY...................... UOC:V53	1
27	PFFZZ	60380	JTT 1211	.BEARING,ROLLER,NEED................ UOC:V53	1
28	XDFZZ	11083	5P4887	.BEARING........................... UOC:V53	1
29	PAFZZ	58312	1M3833-C0	.PIN,GROOVED,HEADLES............... UOC:V53	1
30	PAFZZ	11083	2V2097	.PIN,GROOVED,HEADLES............... UOC:V53	1
31	XAFZZ	11083	1V9626	.HOUSING........................... UOC:V53	1
32	PAFZZ	80205	NAS561P8-10	PIN,SPRING......................... UOC:V53	1
33	PAFZZ	81349	M83248/2-914	PACKING,PREFORMED.................. UOC:V53	2
34	XDFZZ	11083	2V2101	BODY............................... UOC:V53	1
35	XDFZZ	11083	2V2099	PLUNGER............................ UOC:V53	1
36	XDFZZ	11083	2V2153	LINK............................... UOC:V53	1
37	PAFZZ	11083	2BC858	PLUG,PIPE.......................... UOC:V53	1

END OF FIGURE

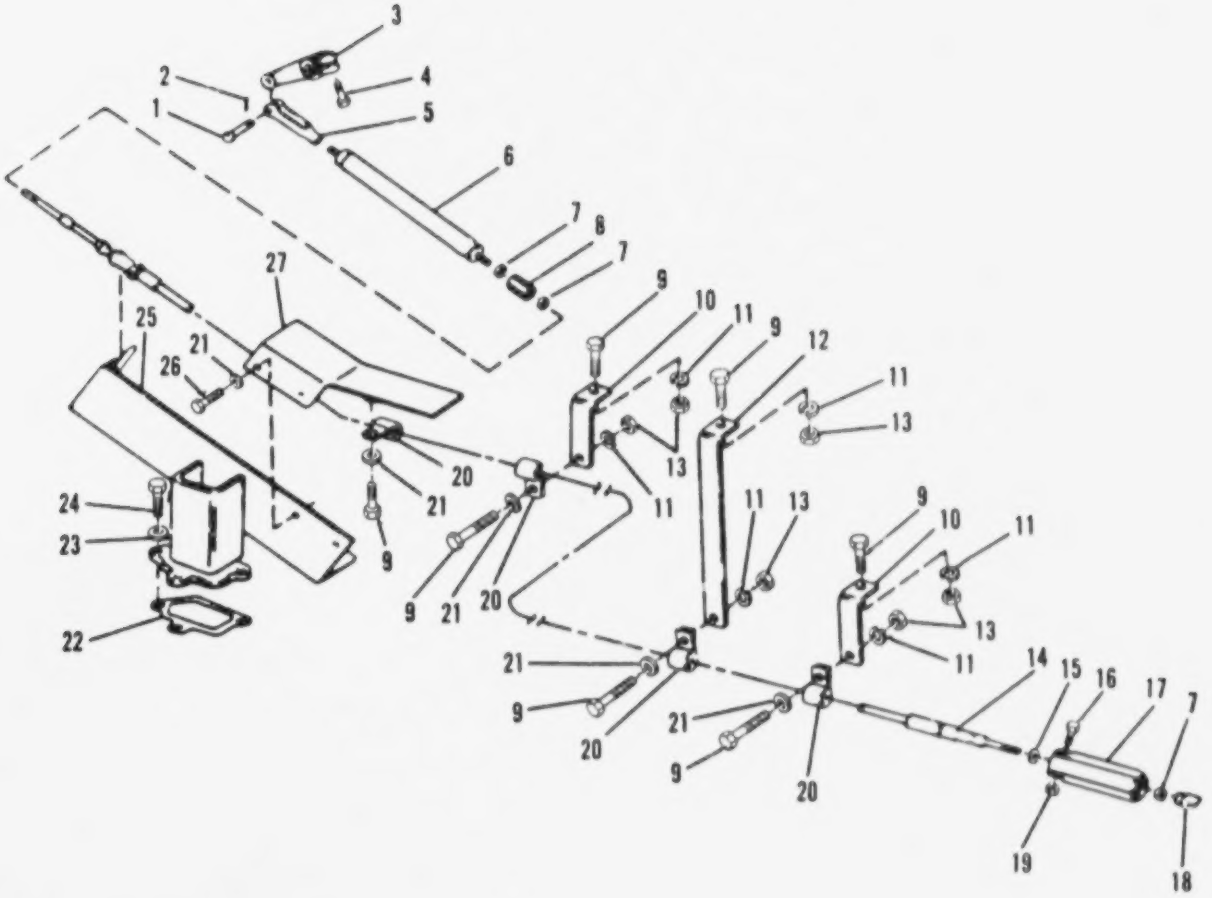

FIGURE 45. GOVERNOR CONTROL ASSEMBLY

(1) ITEM NO	(2) SMR CODE	(3) CAGEC	(4) PART NUMBER	(5) DESCRIPTION AND USABLE ON CODES(UOC)	(6) QTY
				GROUP 0308: ENGINE SPEED GOVERNOR AND CONTROLS	
				FIG. 45 GOVERNOR CONTROL ASSEMBLY	
1	PAFZZ	11083	4J5325	PIN,STRAIGHT,HEADED.................. UOC:V53	1
2	PAFZZ	11083	3B4607	PIN,COTTER.......................... UOC:V53	1
3	XDFZZ	11083	5F2708	LEVER,GOV CONT...................... UOC:V53	1
4	PAFZZ	53711	5979393-1	SCREW,CAP,HEXAGON H................. UOC:V53	1
5	PAFZZ	11083	8B3768	CLEVIS,ROD END...................... UOC:V53	1
6	XDFZZ	11083	2V3082	LINK ASSY........................... UOC:V53	1
7	PAFZZ	11083	9M1311	NUT,PLAIN,HEXAGON................... UOC:V53	3
8	XDFZZ	11083	2V3078	COUPLING............................ UOC:V53	2
9	PAFZZ	96906	MS18154-58	SCREW,CAP,HEXAGON H................. UOC:V53	7
10	XDFZZ	11083	6L2479	BRACE............................... UOC:V53	2
11	PAFZZ	96906	MS35338-45	WASHER,LOCK......................... UOC:V53	8
12	XDFZZ	11083	2V5687	BRACKET............................. UOC:V53	1
13	PAFZZ	15564	1377A	NUT,PLAIN,HEXAGON................... UOC:V53	5
14	XDFZZ	11083	2V4370	CABLE ASSY.......................... UOC:V53	1
15	PAFZZ	11083	9L6660	SEAL,PLAIN ENCASED.................. UOC:V53	1
16	PAFZZ	11083	1B581	BOLT,MACHINE........................ UOC:V53	1
17	XDFZZ	11083	2V2154	COUPLER............................. UOC:V53	1
18	XDFZZ	11083	2V2102	HOUSING,COUPLER..................... UOC:V53	1
19	PAFZZ	11083	3D8752	NUT,SELF-LOCKING,HE................. UOC:V53	3
20	PAFZZ	11083	8M2770	CLAMP,LOOP.......................... UOC:V53	4
21	PFFZZ	11083	4B4278	WASHER,FLAT......................... UOC:V53	4
22	PAFZZ	11083	4N4307	GASKET.............................. UOC:V53	1
23	PAFZZ	11083	5M2894	WASHER,FLAT......................... UOC:V53	3
24	PAFZZ	11083	0S1594	BOLT,MACHINE........................	3

(1) ITEM NO	(2) SMR CODE	(3) CAGEC	(4) PART NUMBER	(5) DESCRIPTION AND USABLE ON CODES(UOC)	(6) QTY
				UOC:V53	
25	XDFZZ	11083	2V5673	SUPPORT ASSY........................	1
				UOC:V53	
26	PAFZZ	96906	MS18154-58	SCREW,CAP,HEXAGON H................	2
				UOC:V53	
27	XDFZZ	11083	2V5668	GUARD ASSY..........................	1
				UOC:V53	

END OF FIGURE

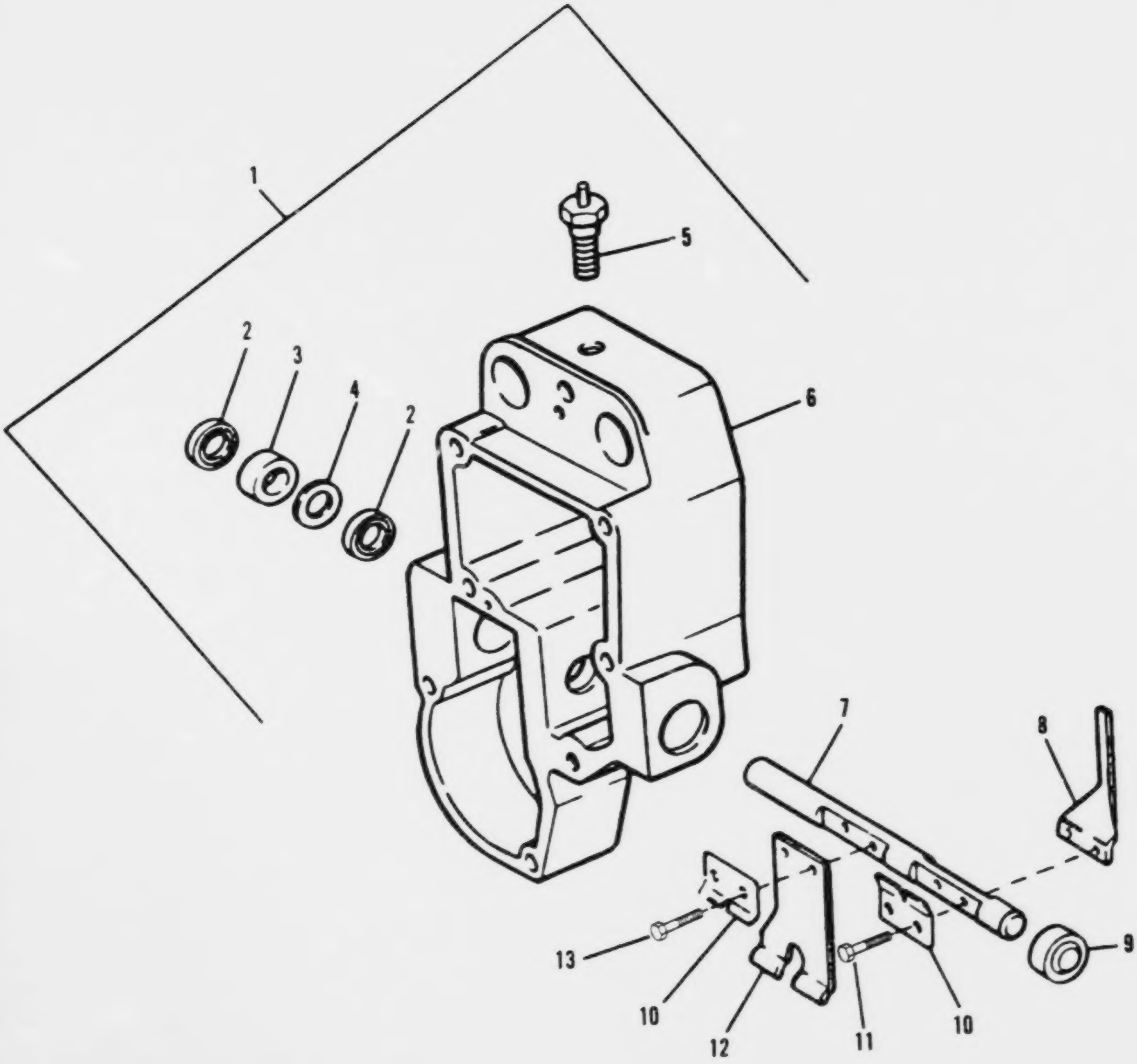

FIGURE 46. GOVERNOR COVER ASSEMBLY

(1) ITEM NO	(2) SMR CODE	(3) CAGEC	(4) PART NUMBER	(5) DESCRIPTION AND USABLE ON CODES(UOC)	(6) QTY
				GROUP 0308: ENGINE SPEED GOVERNOR AND CONTROLS	
				FIG. 46 GOVERNOR COVER ASSEMBLY	
1	PAHHH	11083	9N1917	COVER,GOVERNOR SHUT.................. UOC:V53	1
2	PAHZZ	11083	5P796	.SEAL,PACKING PART OF KIT P/N 5R4553 UOC:V53	2
3	PFHZZ	11083	1S7984	.BEARING,SLEEVE...................... UOC:V53	1
4	PAHZZ	76275	A1638-2	.WASHER,FLAT......................... UOC:V53	1
5	PFHZZ	11083	3P0009	.INSULATOR........................... UOC:V53	1
6	PAHZZ	11083	1S7336	.LOCKING PLATE,NUT A................. UOC:V53	1
7	PAHZZ	11083	4N0951	.SHAFT,STRAIGHT...................... UOC:V53	1
8	XDHZZ	11083	9N1916	.LEVER,SHUTOFF....................... UOC:V53	1
9	PFHZZ	11083	5M6228	.BEARING,PLAIN....................... UOC:V53	1
10	PFHZZ	58312	1S7336-C0	.LOCKING PLATE,NUT A................. UOC:V53	2
11	PAHZZ	96906	MS90728-5	.SCREW,CAP,HEXAGON H................. UOC:V53	2
12	XDHZZ	11083	9N2165	.LEVER,SOLENOID...................... UOC:V53	1
13	PAHZZ	96906	MS90728-7	.SCREW,CAP,HEXAGON H................. UOC:V53	2

END OF FIGURE

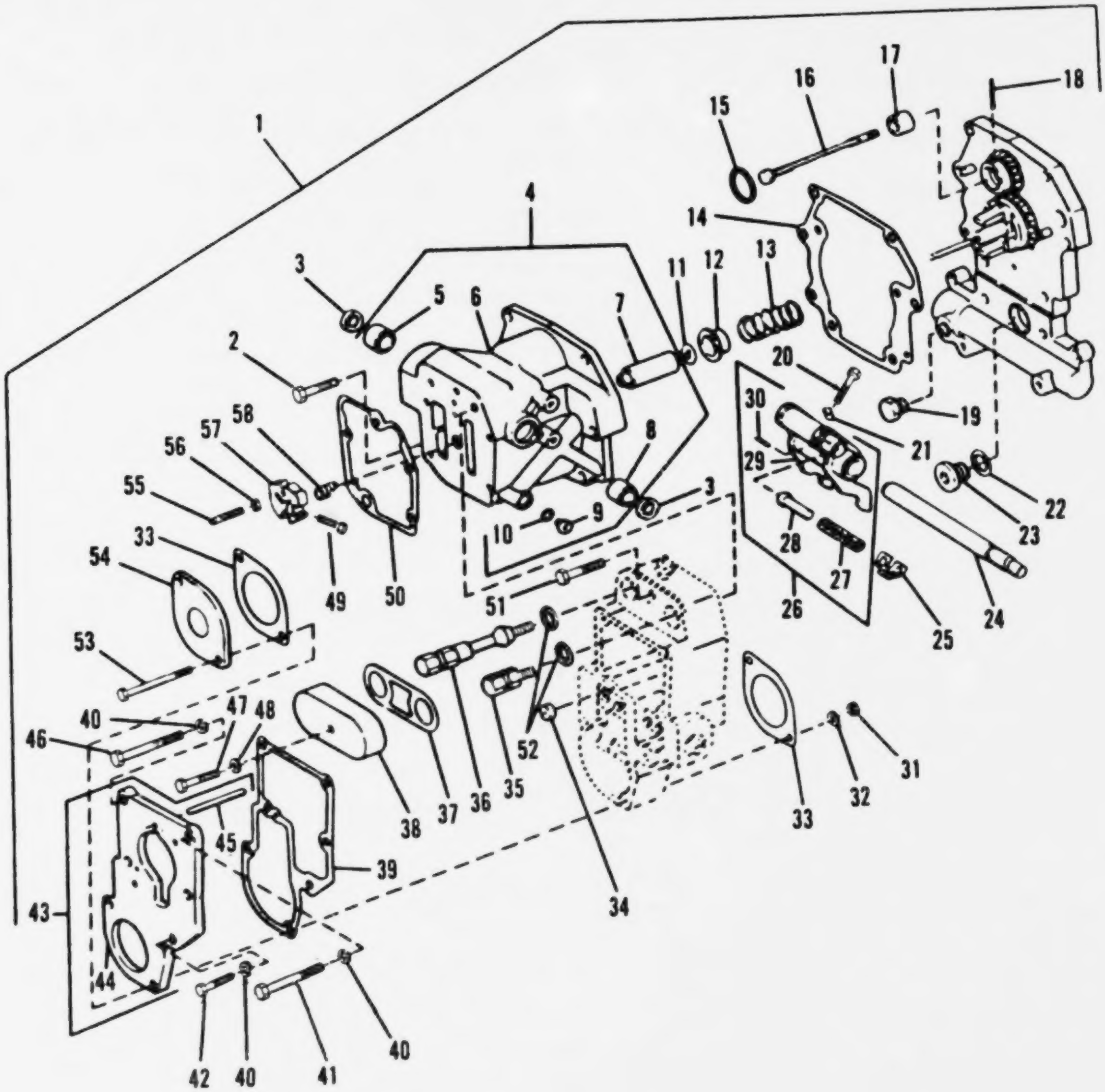

FIGURE 47. GOVERNOR ASSEMBLY

(1) ITEM NO	(2) SMR CODE	(3) CAGEC	(4) PART NUMBER	(5) DESCRIPTION AND USABLE ON CODES(UOC)	(6) QTY
				GROUP 0308: ENGINE SPEED GOVERNOR AND CONTROLS	
				FIG. 47 GOVERNOR ASSEMBLY	
1	XDFHH	11083	7N6271	GOVERNOR GRP,BSC..................... UOC:V53	1
2	PAHZZ	11083	0S1594	.BOLT,MACHINE........................ UOC:V53	1
3	PAHZZ	11083	8T2604	.SEAL,PLAIN PART OF KIT P/N 5R4553.. UOC:V53	2
4	XDHHH	11083	9N3363	.HOUSING ASSY........................ UOC:V53	1
5	PFHZZ	11083	9S0798	..BEARING,PLAIN...................... UOC:V53	1
6	XAHZZ	11083	9N3742	..HOUSING............................ UOC:V53	1
7	PFHZZ	11083	8M8403	..GUIDE SPRING....................... UOC:V53	1
8	PAHZZ	11083	8S0134	..BEARING,SLEEVE..................... UOC:V53	1
9	PAHZZ	11083	4J7533	..PLUG,MACHINE THREAD................ UOC:V53	1
10	PAHZZ	11083	4J7533	..PLUG,MACHINE THREAD PART OF KIT P/N 5R4553........................... UOC:V53	1
11	PFHZZ	11083	8H9181	.SPRING,GOVERNOR..................... UOC:V53	1
12	PFHZZ	11083	6N3504	.SEAT,HELICAL COMPRE................. UOC:V53	1
13	XBHZZ	11083	9L6448	.SPRING,HELICAL,COMP................. UOC:V53	1
14	PAHZZ	11083	4N1870	.GASKET PART OF KIT P/N 5R4553...... UOC:V53	1
15	PAHZZ	80756	RST-143	.RING,RETAINING...................... UOC:V53	1
16	XDHZZ	11083	6N9040	.DRIVE ASSY,FLEXIBLE................. UOC:V53	1
17	XDHZZ	11083	6N8780	.STOP................................ UOC:V53	1
18	PAHZZ	60380	Q-8310	.BEARING,ROLLER,NEED................. UOC:V53	1
19	PAHZZ	11083	5M6214	.PLUG,PIPE........................... UOC:V53	1
20	PAHZZ	88044	AN101118	.BOLT,MACHINE........................ UOC:V53	1
21	PAHZZ	11083	2F4159	.LOCK PLATE,OIL TUBE PART OF KIT P/N 5R4553.......................... UOC:V53	1
22	PAHZZ	99517	A180-119MILP2573 2	.PACKING,PREFORMED PART OF KIT P/N 5R4553 PART OF KIT P/N 6V241........ UOC:V53	1

(1) ITEM NO	(2) SMR CODE	(3) CAGEC	(4) PART NUMBER	(5) DESCRIPTION AND USABLE ON CODES(UOC)	(6) QTY
23	PAHZZ	11083	9S8008	.PLUG................................ UOC:V53	1
24	XDHZZ	11083	4N1911	.SHAFT,GOVERNOR CONT................. UOC:V53	1
25	PAHZZ	11083	9S4673	.CLAMP,BRIDGE........................ UOC:V53	1
26	PFHZZ	11083	2P8686	.LEVER ASSEMBLY,CONT................. UOC:V53	1
27	PFHZZ	58312	7M7316-CO	..SPRING,HELICAL,COMP................ UOC:V53	1
28	PAHZZ	11083	9M5788	..PIN,SHOULDER,HEADLE................ UOC:V53	1
29	PAHZZ	11083	9S4466	..SHIFTER FORK....................... UOC:V53	1
30	PAHZZ	11083	8N984	..PIN,SPRING......................... UOC:V53	1
31	PAHZZ	24617	426376	.NUT,PLAIN,HEXAGON................... UOC:V53	2
32	PAHZZ	11083	5P0537	.WASHER.............................. UOC:V53	4
33	PAHZZ	11083	8S5388	.GASKET PART OF KIT P/N 5R4553...... UOC:V53	2
34	PFHZZ	11083	2P8679	.STRAINER ASSEMBLY................... UOC:V53	1
35	XDHZZ	11083	9N3324	.SCREW,HIGH IDLE..................... UOC:V53	1
36	XDHZZ	11083	7N7325	.SCREW,LOW IDLE...................... UOC:V53	1
37	PAHZZ	11083	5L8991	.GASKET PART OF KIT P/N 5R4553...... UOC:V53	1
38	PAHZZ	11083	5L8992	.COVER,ACCESS........................ UOC:V53	1
39	PAHZZ	11083	2P8669	.GASKET PART OF KIT P/N 5R4553...... UOC:V53	1
40	PAHZZ	11083	3F9556	.WASHER,LOCK......................... UOC:V53	5
41	PFHZZ	58312	8L4308-CO	.BOLT,MACHINE........................ UOC:V53	1
42	PAHZZ	96906	MS90728-33	.BOLT,MACHINE........................ UOC:V53	1
43	XDHHH	11083	2P8707	.PLATE ASSY.......................... UOC:V53	1
44	XAHZZ	11083	2P8632	..PLATE.............................. UOC:V53	1
45	PAHZZ	60380	W-430-Q	..ROLLER,BEARING..................... UOC:V53	1
46	PAHZZ	96906	MS18154-41	.BOLT,MACHINE........................ UOC:V53	3
47	PAHZZ	11083	6L1756	.BOLT,MACHINE........................ UOC:V53	1
48	PAHZZ	11083	4B9747	.WASHER,FLAT......................... UOC:V53	1

(1) ITEM NO	(2) SMR CODE	(3) CAGEC	(4) PART NUMBER	(5) DESCRIPTION AND USABLE ON CODES(UOC)	(6) QTY
49	PAHZZ	11083	9M47C4	.SCREW,CAP,SOCKET HE................. UOC:V53	1
50	PAHZZ	11083	2P8697	.GASKET PART OF KIT P/N 5R4553...... UOC:V53	1
51	PAHZZ	96906	MS90728-39	.BOLT,MACHINE........................ UOC:V53	1
52	PAHZZ	11083	2J157	.PACKING,PREFORMED PART OF KIT P/N 5R4553............................... UOC:V53	2
53	PAHZZ	11083	1B2714	.BOLT,MACHINE........................ UOC:V53	3
54	XDHZZ	11083	2N4386	.COVER............................... UOC:V53	1
55	PAHZZ	11083	8L4155	.SCREW............................... UOC:V53	1
56	PAHZZ	96906	MS35690-424	.NUT,PLAIN,HEXAGON................... UOC:V53	1
57	PAHZZ	11083	8L4154	.COLLAR, FULL LOAD S................. UOC:V53	1
58	XDHZZ	11083	6N8793	.SPRING.............................. UOC:V53	1

END OF FIGURE

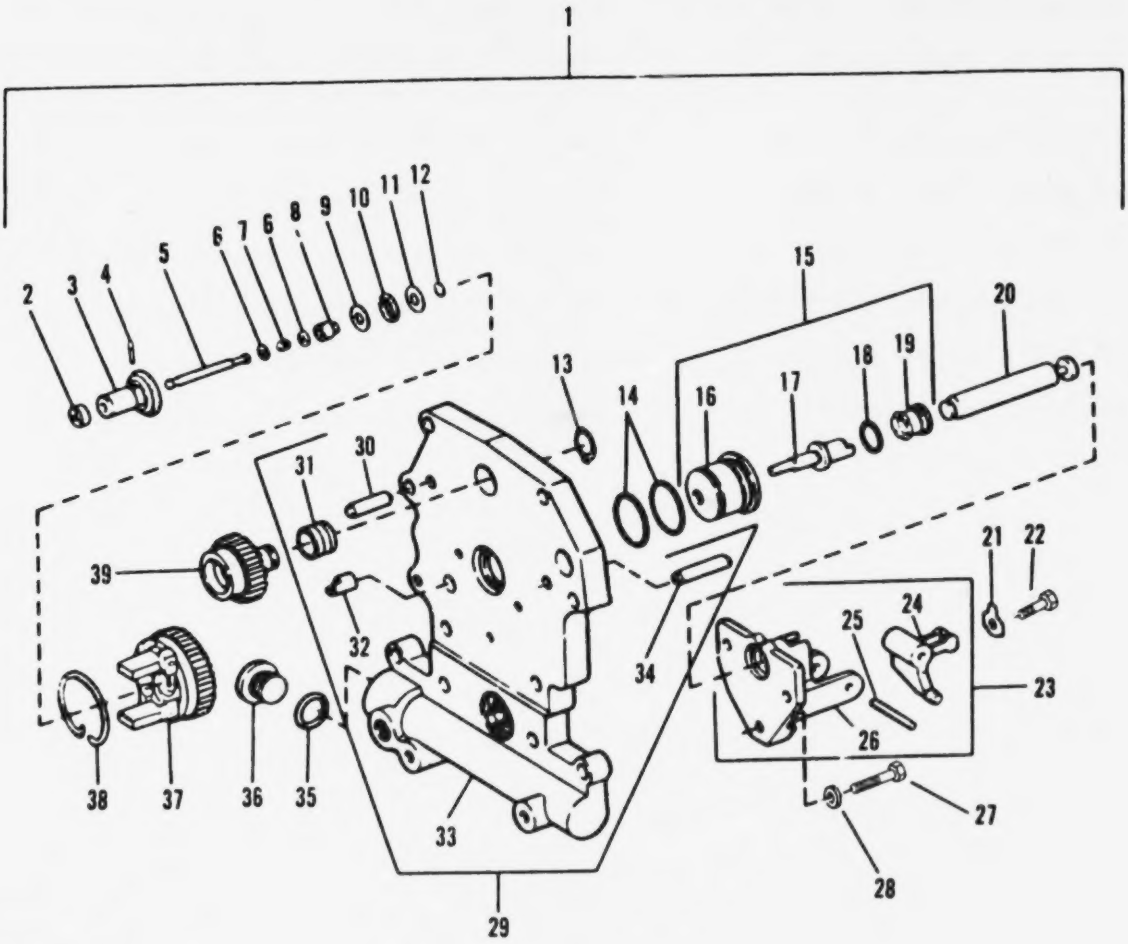

FIGURE 48. GOVERNOR PLATE ASSEMBLY

(1) ITEM NO	(2) SMR CODE	(3) CAGEC	(4) PART NUMBER	(5) DESCRIPTION AND USABLE ON CODES(UOC)	(6) QTY
				GROUP 0308: ENGINE SPEED GOVERNOR AND CONTROLS	
				FIG. 48 GOVERNOR PLATE ASSEMBLY	
1	XDHHH	11083	9N3684	PLATE GRP............................ UOC:V53	1
2	PFHZZ	11083	4N3887	.RING................................ UOC:V53	1
3	PFHZZ	11083	6N8629	.SEAT,HELICAL COMPRE................. UOC:V53	1
4	PAHZZ	11083	2P8630	.DOWEL............................... UOC:V53	1
5	PAHZZ	11083	8M6739	.PIN,GROOVED,HEADED.................. UOC:V53	1
6	PAHZZ	11083	9M6302	.WASHER,FLAT......................... UOC:V53	2
7	PFHZZ	11083	9M6303	.SPRING,HELICAL,COMP................. UOC:V53	1
8	XDHZZ	11083	2S0007	.SLEEVE.............................. UOC:V53	1
9	PBHZZ	11083	7M7193	.BEARING, WASHER..................... UOC:V53	1
10	PFHZZ	11083	7M7219	.RETAINER AND ROLLER................. UOC:V53	1
11	XDHZZ	11083	6N8195	.RACE,NDL THR........................ UOC:V53	1
12	PAHZZ	11083	3K0810	.RING,RETAINING...................... UOC:V53	1
13	PAHZZ	96906	MS16624-1087	.RING,RETAINING...................... UOC:V53	1
14	PAHZZ	11083	5P5601	.PACKING,PREFORMED PART OF KIT P/N 5R4553............................... UOC:V53	2
15	XDHHH	11083	6N1947	.PISTON ASSY......................... UOC:V53	1
16	XDHZZ	11083	4N1807	..CYLINDER........................... UOC:V53	1
17	PFHZZ	11083	4N0820	..SLEEVE............................. UOC:V53	1
18	PAHZZ	11083	5P9757	..PACKING,PREFORMED PART OF KIT P/N 5R4553............................... UOC:V53	1
19	PFHZZ	11083	8N6979	..PISTON ASSEMBLY,GOV................ UOC:V53	1
20	XDHZZ	11083	7N2351	.PIN,CONTROL......................... UOC:V53	1
21	PAHZZ	11083	2A5328	.LOCK PLATE.......................... UOC:V53	2
22	PAHZZ	18876	9072391	.NUT,SELF-LOCKING,HE................. UOC:V53	2
23	XDHZZ	11083	9N3323	.BRACKET ASSY........................	1

(1) ITEM NO	(2) SMR CODE	(3) CAGEC	(4) PART NUMBER	(5) DESCRIPTION AND USABLE ON CODES(UOC)	(6) QTY
				UOC:V53	
24	XDHZZ	11083	7N4555	..LEVER................................ UOC:V53	1
25	PAHZZ	60380	C-434-Q	..ROLLER,BEARING...................... UOC:V53	1
26	XDHZZ	11083	6N2501	..BRACKET.............................. UOC:V53	1
27	PAHZZ	11083	7L6210	.BOLT,MACHINE......................... UOC:V53	1
28	PAHZZ	11083	9M1974	.WASHER,FLAT.......................... UOC:V53	1
29	XDHZZ	11083	7N4554	.PLATE ASSY........................... UOC:V53	1
30	PAHZZ	11083	9M2089	..PIN,STRAIGHT,HEADLE................. UOC:V53	1
31	XDHZZ	11083	7N0579	..BEARING.............................. UOC:V53	1
32	PAHZZ	11083	6N3175	..PIN.................................. UOC:V53	1
33	XAHZZ	11083	7N4553	..PLATE................................ UOC:V53	1
34	PAHZZ	11083	4N898	..PIN,HOLLOW........................... UOC:V53	1
35	PAHZZ	99517	A180-119MILP2573 2	.PACKING,PREFORMED PART OF KIT P/N 5R4553.......................... UOC:V53	1
36	PAHZZ	11083	9S8008	.PLUG.................................. UOC:V53	1
37	XDHHH	11083	9L6509	.WEIGHT ASSY........................... UOC:V53	1
38	PAHZZ	11083	4N1913	.RING,RETAINING........................ UOC:V53	1
39	XDHZZ	11083	6N8783	.GEAR,GOVERNOR DRIVE................... UOC:V53	1

END OF FIGURE

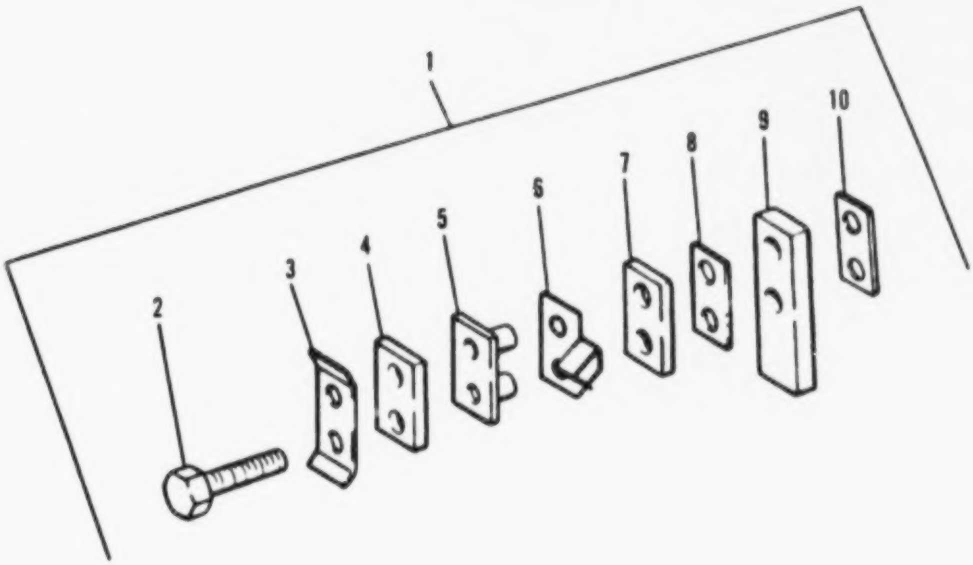

FIGURE 49. GOVERNOR SPRING ASSEMBLY

(1) ITEM NO	(2) SMR CODE	(3) CAGEC	(4) PART NUMBER	(5) DESCRIPTION AND USABLE ON CODES(UOC)	(6) QTY
				GROUP 0308: ENGINE SPEED GOVERNOR AND CONTROLS	
				FIG. 49 GOVERNOR SPRING ASSEMBLY	
1	PFHHZ	11083	4N4267	SPRING, ASSEMBLY..................... UOC:V53	1
2	PAHZZ	96906	MS90728-7	.SCREW,CAP,HEXAGON H................ UOC:V53	2
3	PAHZZ	11083	9M6292	.LOCKING PLATE,NUT A PART OF KIT P/N 5R4553.......................... UOC:V53	1
4	PFHZZ	11083	8M9062	.RETAINER,TORQUE SPR................ UOC:V53	1
5	PFHZZ	58312	1P6452-CO	.INSULATOR,BUSHING.................. UOC:V53	1
6	PFHZZ	11083	4N4218	.CONTACT,FUEL PUMP H................ UOC:V53	1
7	PFHZZ	11083	3S0602	.CONNECTING LINK,RIG................ UOC:V53	1
8	PAHZZ	11083	9L7235	.SHIM................................ UOC:V53	1
9	PFHZZ	11083	2S7391	.BAR,RACK STOP,GOVER................ UOC:V53	1
10	PFHZZ	11083	1P9958	.PAD,TORQUE,GOVERNOR................ UOC:V53	1

END OF FIGURE

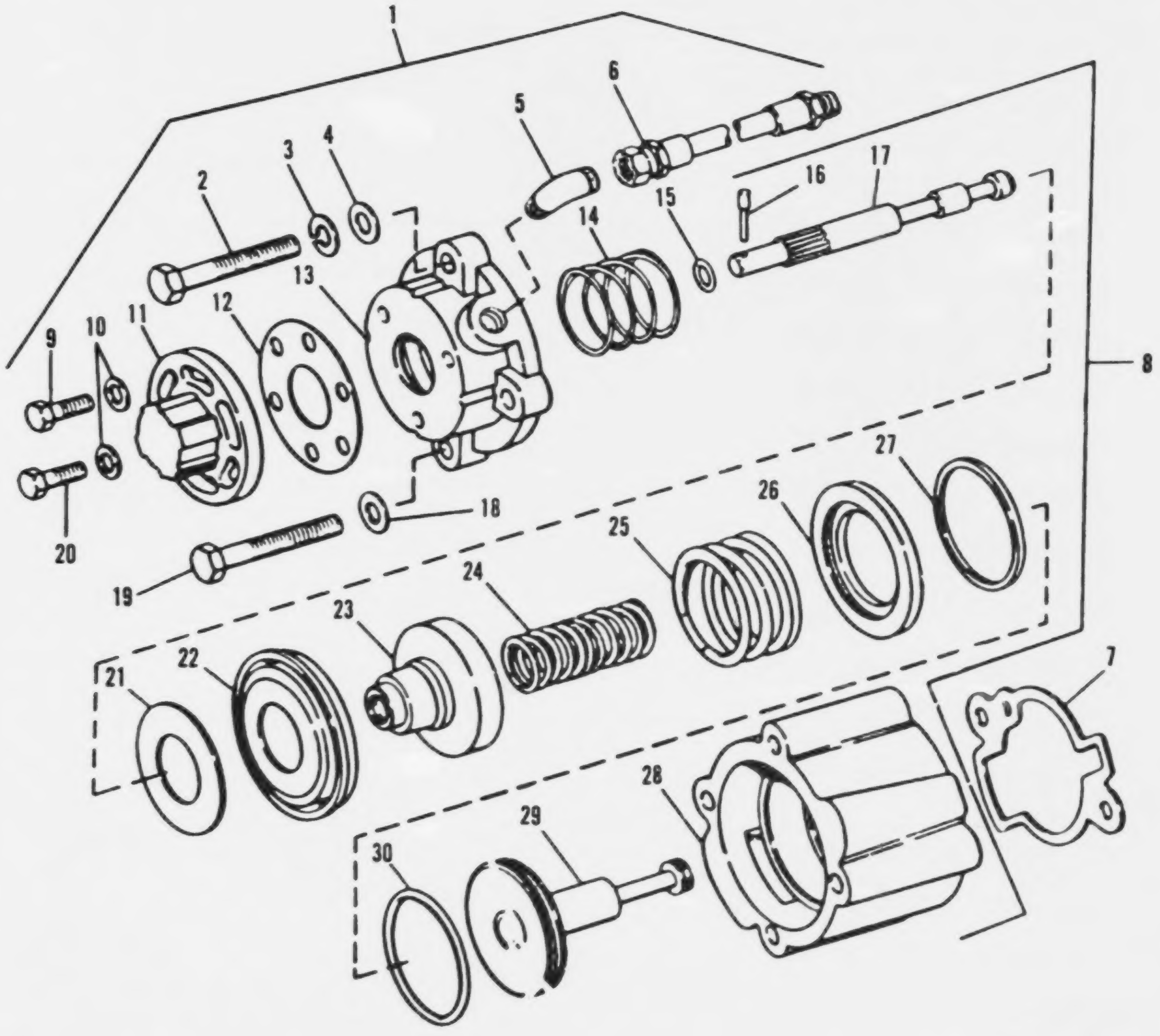

FIGURE 50. FUEL RATIO CONTROL ASSEMBLY

(1) ITEM NO	(2) SMR CODE	(3) CAGEC	(4) PART NUMBER	(5) DESCRIPTION AND USABLE ON CODES(UOC)	(6) QTY
				GROUP 0308: ENGINE SPEED GOVERNOR AND CONTROLS	
				FIG. 50 FUEL RATIO CONTROL ASSEMBLY	
1	XBFFF	11083	6N6209	CONTROL,FUEL RATIO.................. UOC:V53	1
2	PAFZZ	11083	4N8112	.BOLT.............................. UOC:V53	2
3	PAFZZ	96906	MS35338-45	.WASHER,LOCK....................... UOC:V53	2
4	PAFZZ	11083	8F7242	.WASHER............................ UOC:V53	2
5	PAFZZ	11083	2N1287	.ELBOW,PIPE TO TUBE................ UOC:V53	1
6	PAFZZ	11083	6N3169	.HOSE ASSEMBLY,NOMET............... UOC:V53	1
7	PAFZZ	11083	2P8643	.GASKET PART OF KIT P/N 5R4553...... UOC:V53	1
8	PFFZZ	11083	6N0651	.FUEL CONTROL,PUMP................. UOC:V53	1
9	PAFZZ	11083	S1615	..BOLT,MACHINE..................... UOC:V53	2
10	PAFZZ	11083	9S5282	..WASHER,FLAT...................... UOC:V53	3
11	XBFZZ	11083	6N7148	..COVER,ACCESS..................... UOC:V53	1
12	PAFZZ	11083	6L5766	..GASKET PART OF KIT P/N 5R4553..... UOC:V53	1
13	PFFZZ	11083	2P8226	..COVER............................ UOC:V53	1
14	PFFZZ	11083	6N0513	..SPRING........................... UOC:V53	1
15	PAFZZ	11083	4J2506	..PACKING,PREFORMED PART OF KIT P/N 5R4553............................. UOC:V53	1
16	PAFZZ	11083	7N5715	..PIN,SHOULDER,HEADLE.............. UOC:V53	1
17	PFFZZ	11083	2P8939	..VALVE,INTERNAL................... UOC:V53	1
18	PAFZZ	11083	8F7242	..WASHER........................... UOC:V53	2
19	PAFZZ	96906	MS90728-33	..BOLT,MACHINE..................... UOC:V53	2
20	PAFZZ	11083	S1347	..BOLT,SPECIAL..................... UOC:V53	1
21	PAFZZ	11083	2P8803	..WASHER........................... UOC:V53	1
22	XAFZZ	11083	2P8804	..DIAPHRAGM,VALVE,SPE.............. UOC:V53	1
23	PFFZZ	11083	2P8875	..RETAINER ASSEMBLY................ UOC:V53	1

(1) ITEM NO	(2) SMR CODE	(3) CAGEC	(4) PART NUMBER	(5) DESCRIPTION AND USABLE ON CODES(UOC)	(6) QTY
24	PFFZZ	11083	6NC515	..SPRING.......................... UOC:V53	1
25	PFFZZ	11083	7N2C9	..SPRING.......................... UOC:V53	1
26	PFFZZ	11083	2P88C1	..RETAINER........................ UOC:V53	1
27	PAFZZ	11083	2P8234	..GASKET PART OF KIT P/N 5R4553..... UOC:V53	1
28	PFFZZ	11083	2P8225	..HOUSING,PUMP.................... UOC:V53	1
29	XBFFF	11083	6NC593	..VALVE ASSY,LIMITER............... UOC:V53	1
30	PAFZZ	11083	3P1979	..PACKING,PREFORMED PART OF KIT P/N 5R4553............................ UOC:V53	1

END OF FIGURE

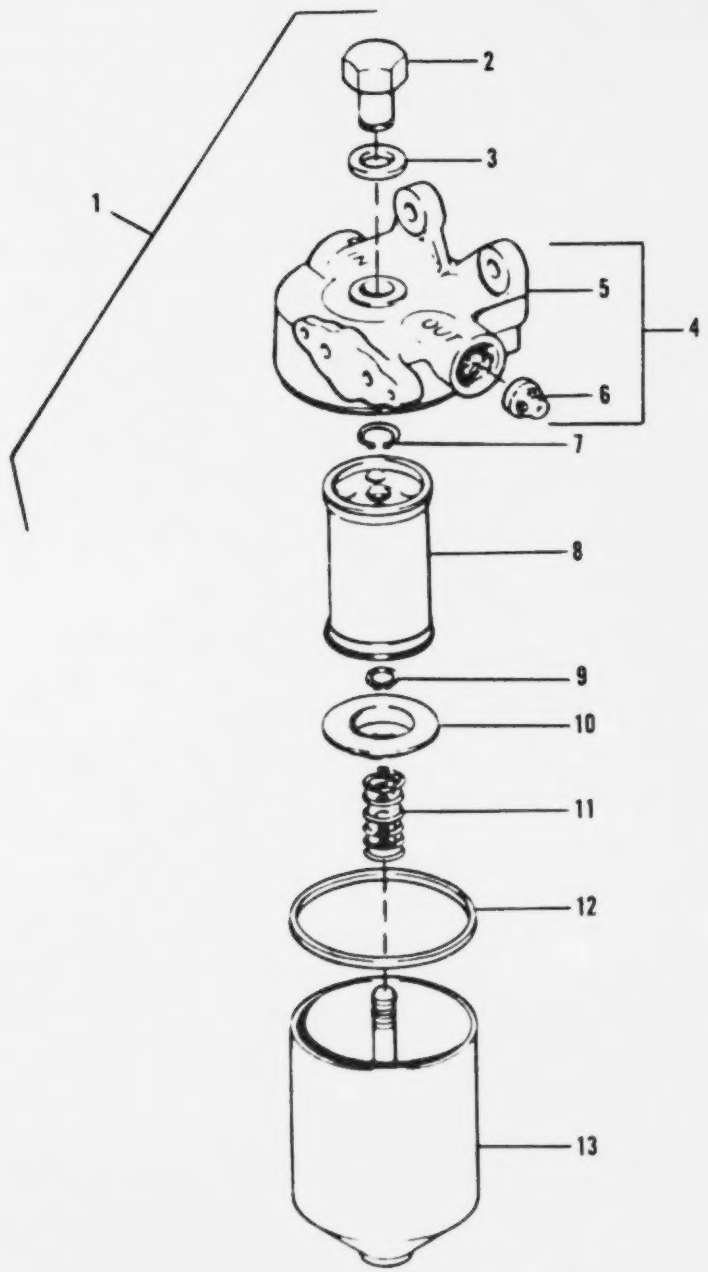

FIGURE 51. PRIMARY FUEL FILTER ASSEMBLY

(1) ITEM NO	(2) SMR CODE	(3) CAGEC	(4) PART NUMBER	(5) DESCRIPTION AND USABLE ON CODES(UOC)	(6) QTY
				GROUP 0309: FUEL FILTERS	
				FIG. 51 PRIMARY FUEL FILTER ASSEMBLY	
1	PAOZZ	11083	6N1C44	FILTER,FLUID......................... UOC:V53	1
2	PAOZZ	11083	8H28C7	.NUT,SLEEVE.......................... UOC:V53	1
3	PAOZZ	80020	AE7769-10	.WASHER,FLAT PART OF KIT P/N 5R4553. UOC:V53	1
4	PFOZZ	11083	6N1C45	.BASE ASSEMBLY....................... UOC:V53	1
5	XAOZZ	11083	6NC953	..BASE,PRI FUEL FLTR................. UOC:V53	1
6	PFOZZ	70040	5622759	..VALVE ASSEMBLY,FUEL................ UOC:V53	1
7	PFOZZ	11083	1L3769	.RING................................ UOC:V53	1
8	PAOZZ	81321	6663836	.FILTER ELEMENT,FLUI................. UOC:V53	1
9	PFOZZ	11083	2H3429	.RING,RETAINING...................... UOC:V53	1
10	PFOZZ	11083	7H9678	.SEAT,HELICAL COMPRE................. UOC:V53	1
11	PFOZZ	11083	7S9323	.SPRING,HELICAL,COMP................. UOC:V53	1
12	PAOZZ	11083	8H2778	.GASKET PART OF KIT P/N 5R4553...... UOC:V53	1
13	PFOZZ	11083	8H2810	.FILTER BODY,FLUID................... UOC:V53	1

END OF FIGURE

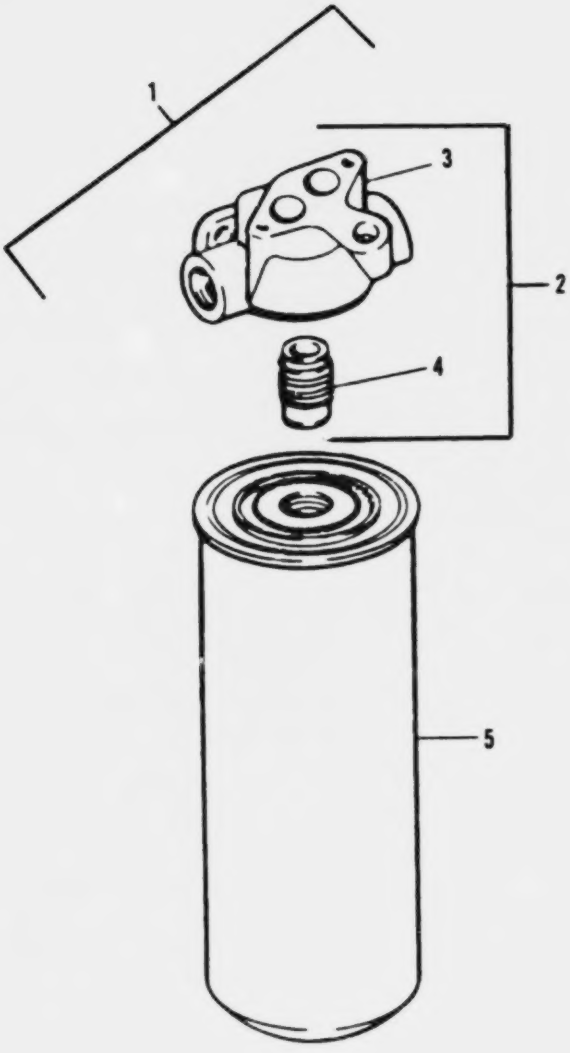

FIGURE 52. SECONDARY FUEL FILTER ASSEMBLY

(1) ITEM NO	(2) SMR CODE	(3) CAGEC	(4) PART NUMBER	(5) DESCRIPTION AND USABLE ON CODES(UOC)	(6) QTY
				GROUP 0309: FUEL FILTERS	
				FIG. 52 SECONDARY FUEL FILTER ASSEMBLY	
1	XDOOO	11083	4N1981	FILTER GRP,FUEL...................... UOC:V53	1
2	XDOOO	11083	8N0444	.BASE ASSY,FUEL FLTR................ UOC:V53	1
3	XAOZZ	11083	8N1465	..BASE,FUEL FLTR.................... UOC:V53	1
4	PFOZZ	11083	9S4167	..STUD.............................. UOC:V53	1
5	PAOZZ	11083	4N5823	.FILTER ELEMENT,FLUI................ UOC:V53	1

END OF FIGURE

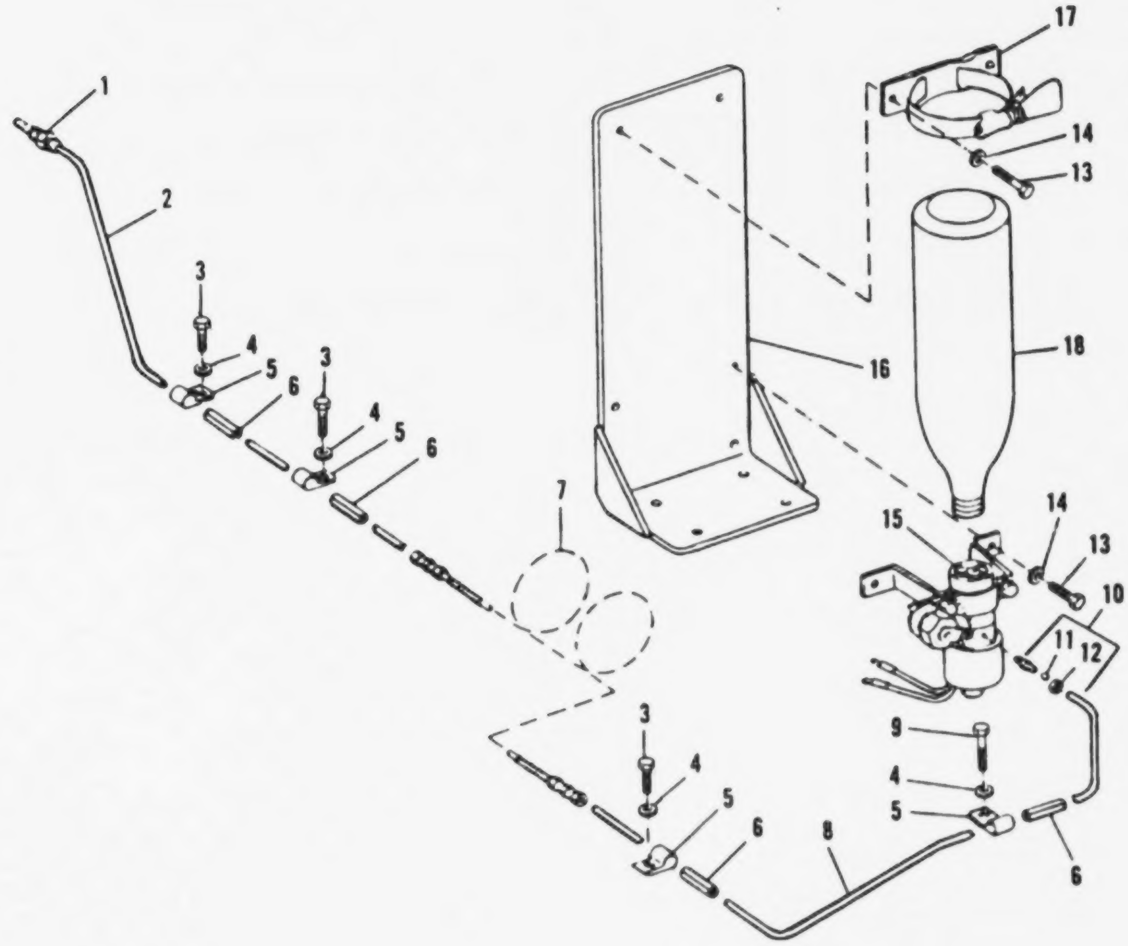

FIGURE [illegible]3. ETHER STARTING AID

(1) ITEM NO	(2) SMR CODE	(3) CAGEC	(4) PART NUMBER	(5) DESCRIPTION AND USABLE ON CODES(UOC)	(6) QTY
				GROUP 0311: ENGINE STARTING AIDS	
				FIG. 53 ETHER STARTING AID	
1	XDOZZ	17627	QA9-1TC	ATOMIZER ASSY........................ UOC:V53	1
2	XDOZZ	11083	8N4052	TUBE,ETHER STG....................... UOC:V53	1
3	PAOZZ	11083	0L1351	BOLT,MACHINE......................... UOC:V53	2
4	PAOZZ	11083	5M2894	WASHER,FLAT.......................... UOC:V53	4
5	PAOZZ	11083	6S5992	CLIP,RETAINING....................... UOC:V53	4
6	PAOZZ	11083	4D623	GROMMET,NONMETALLIC.................. UOC:V53	4
7	PFOZZ	30780	SK10-2275-1JG	TUBING ASSEMBLY,NON.................. UOC:V53	1
8	XDOZZ	11083	8N4051	TUBE,ETHER STG....................... UOC:V53	1
9	PAOZZ	11083	0S1594	BOLT,MACHINE......................... UOC:V53	2
10	PAOZZ	79470	681X2	ADAPTER,STRAIGHT,PI.................. UOC:V53	1
11	XAOZZ	79470	102-15102	.SLEEVE.............................. UOC:V53	1
12	XAOZZ	79470	102-10102	.NUT................................. UOC:V53	1
13	PAOZZ	96906	MS90728-32	BOLT,MACHINE......................... UOC:V53	4
14	PAOZZ	11083	9M1974	WASHER,FLAT.......................... UOC:V53	4
15	XDOOO	53203	QS5-2CT	VALVE ASSY-ETHER..................... UOC:V53	1
16	XDOZZ	11083	8N4054	BRACKET ASSY......................... UOC:V53	1
17	XDOZZ	53203	300-450	CLAMP ASSY-CYL....................... UOC:V53	1
18	XBFZZ	11083	7N296	ETHER CYLINDER.......................	1

END OF FIGURE

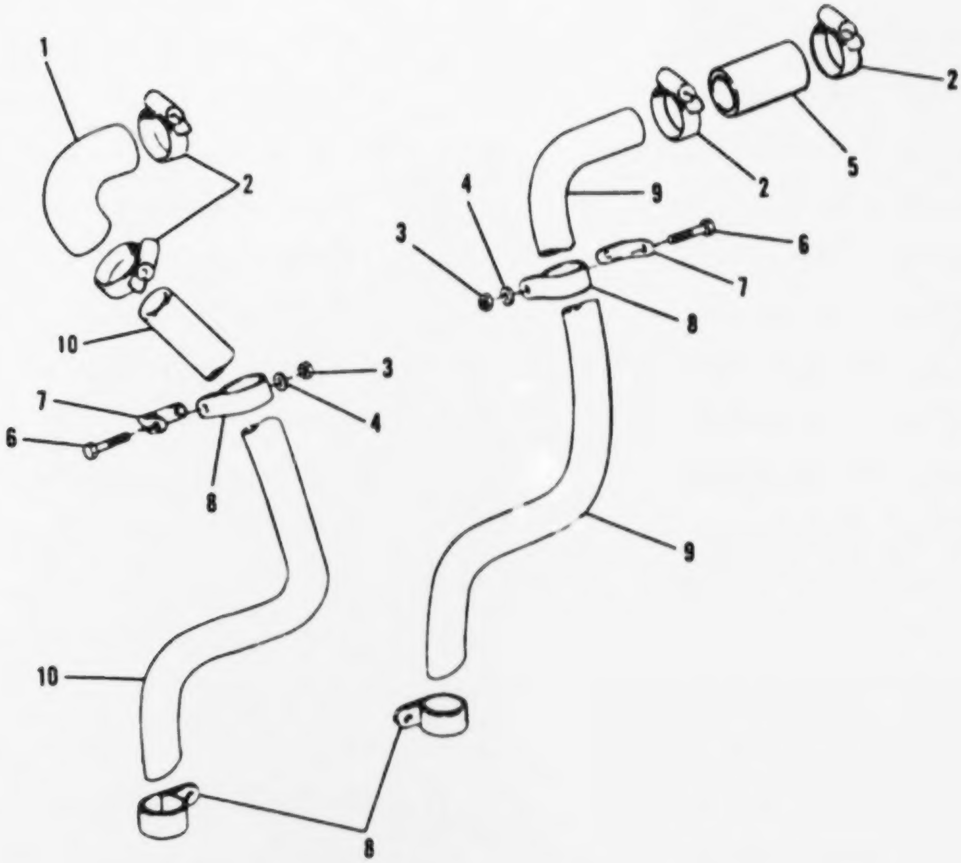

FIGURE 5' . -UMES DISPOSAL ASSEMBLY

(1) ITEM NO	(2) SMR CCDE	(3) CAGEC	(4) PART NUMBER	(5) DESCRIPTICN AND USABLE CN CODES(UOC)	(6) CTY
				GRCUP 04: EXHAUST SYSTEM	
				GROLP 04C1: MUFFLER ANC PIPES	
				FIG. 54 FUMES DISPOSAL ASSEMBLY	
1	PAOZZ	11C83	4N5562	HOSE................................ LCC:V53	1
2	PAOZZ	969C6	MS35842-12	CLAMP,HCSE.......................... LOC:V53	4
3	PAOZZ	15564	1377A	NUT,PLAIN,HEXAGON................... LOC:V53	2
4	PAOZZ	11083	5M2894	WASHER,FLAT......................... UCC:V53	4
5	PAOZZ	11083	5B94C7	HOSE,NONMETALLIC.................... UCC:V53	1
6	PAOZZ	96906	MS18154-58	SCREW,CAP,HEXAGON H................. LCC:V53	2
7	PFOZZ	11C83	9L1775	BRACKET,ANGLE....................... UCC:V53	2
8	PAOZZ	11C83	2S2053	CLIP................................ LCC:V53	4
9	XDOZZ	11083	5R4391	TUBE................................ LCC:V53	1
10	XDOZZ	11C83	5R4392	TUBE................................ LCC:V53	1

END OF FIGURE

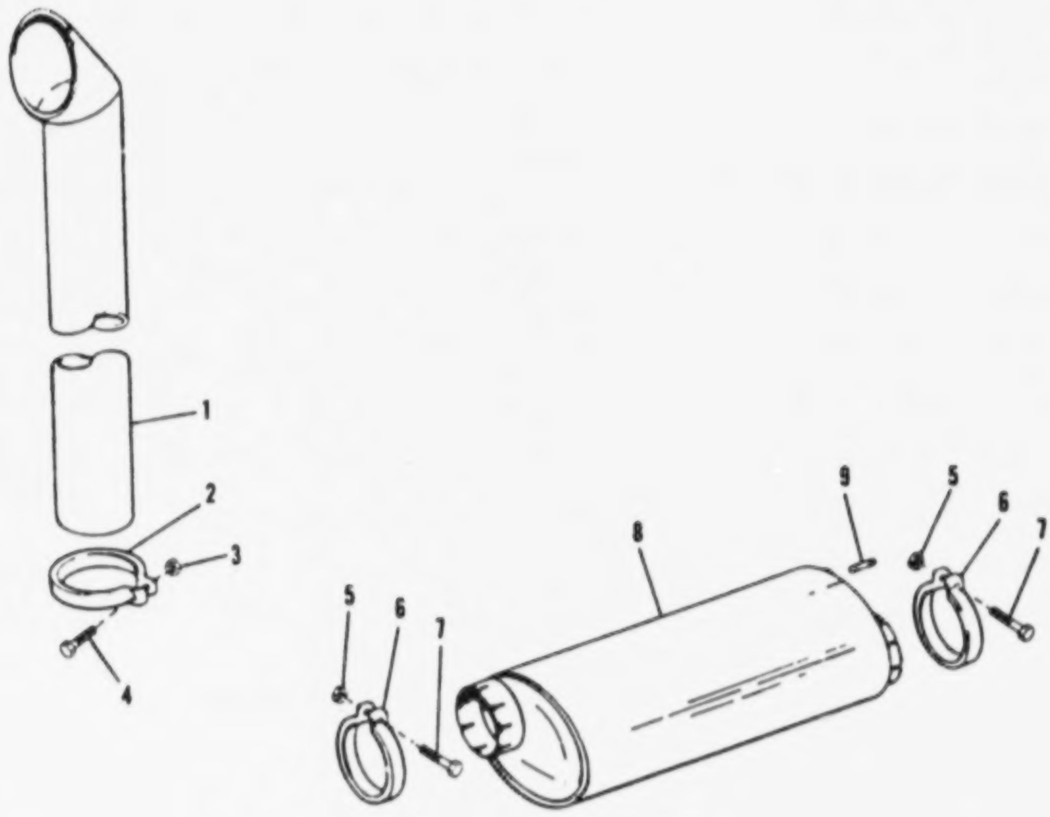

FIGURE 55. MUFFLER AND EXHAUST EXTENSION

(1) ITEM NO	(2) SMR CODE	(3) CAGEC	(4) PART NUMBER	(5) DESCRIPTION AND USABLE ON CODES(UOC)	(6) QTY
				GROUP 0401: MUFFLER AND PIPES	
				FIG. 55 MUFFLER AND EXHAUST EXTENSION	
1	XDOZZ	17284	AEMOC-1287	PIPE,EXT,EXH........................ UOC:V53	1
2	PAOZZ	11083	8S1460	CLAMP,LOOP.......................... UOC:V53	1
3	PAOZZ	11083	1B5357	NUT,PLAIN,HEXAGON................... UOC:V53	1
4	PAOZZ	11083	S1587	BOLT,MACHINE........................ UOC:V53	1
5	PAOZZ	11083	1B5357	NUT,PLAIN,HEXAGON................... UOC:V53	2
6	PAOZZ	11083	8S1460	CLAMP,LOOP.......................... UOC:V53	2
7	PAOZZ	11083	1A1460	BOLT,MACHINE........................ UOC:V53	2
8	PBOZZ	11083	7W8445,4P1471, 2 EA 5P0597	MUFFLER,EXHAUST..................... UOC:V53	1
9	PAOZZ	19207	10935241	STUD,PLAIN.......................... UOC:V53	2

END OF FIGURE

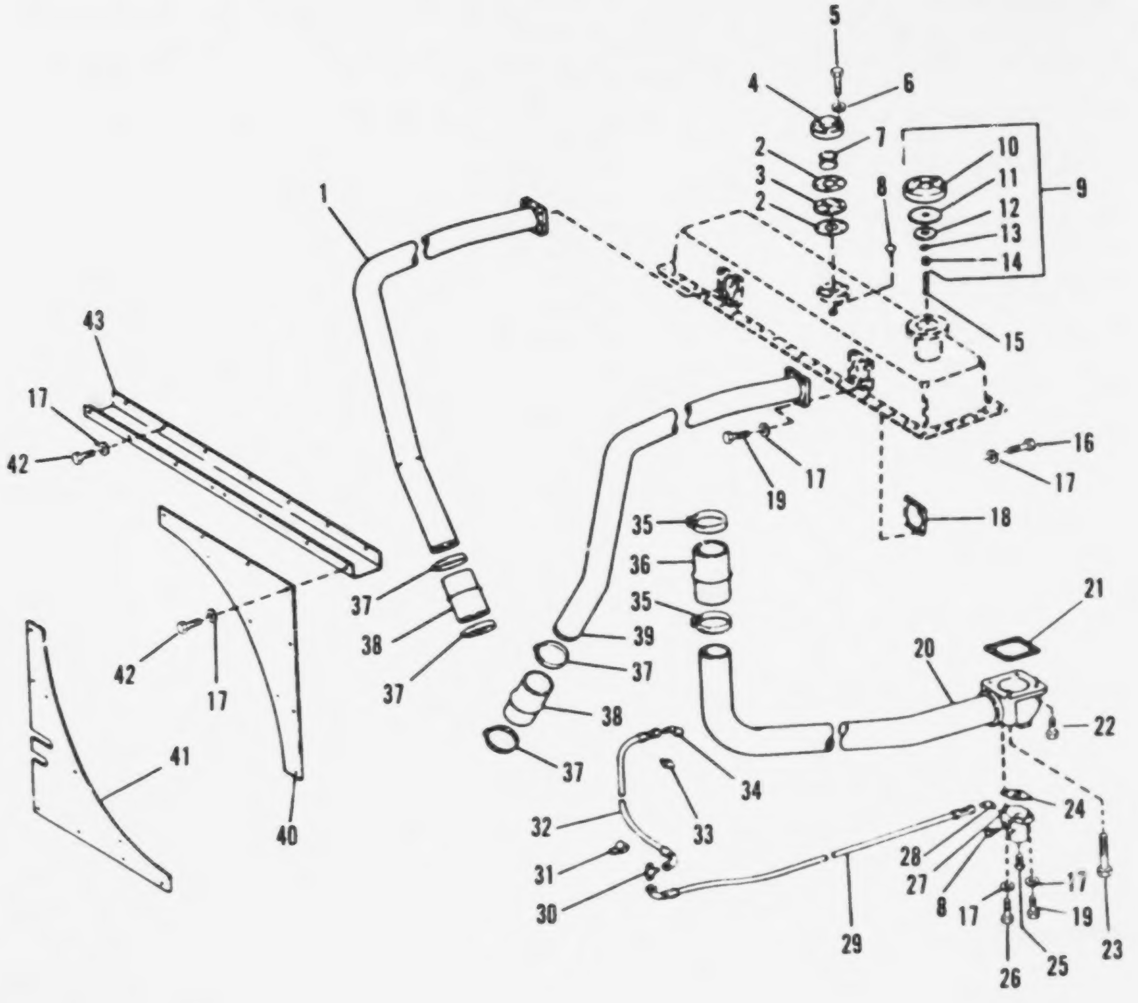

FIGURE 56. RADIATOR COMPONENTS

(1) ITEM NO	(2) SMR CODE	(3) CAGEC	(4) PART NUMBER	(5) DESCRIPTION AND USABLE ON CODES(UOC)	(6) QTY
				GROUP 05: COOLING SYSTEM	
				GROUP 0501: RADIATOR	
				FIG. 56 RADIATOR COMPONENTS	
1	XBFZZ	11083	7N6651	TUBE ASSY,INLET,LH.................. UOC:V53	1
2	PAFZZ	11083	5S4629	GASKET.............................. UOC:V53	2
3	PBFZZ	11083	5S1213	PLATE............................... UOC:V53	1
4	PBFZZ	11083	5S1211	COVER,ACCESS........................ UOC:V53	1
5	PAFZZ	11083	5S5080	BOLT,MACHINE........................ UOC:V53	5
6	PAFZZ	11083	9M1974	WASHER,FLAT......................... UOC:V53	5
7	PAFZZ	11083	5S1218	THERMOSTAT,FLOW CON................. UOC:V53	1
8	PAFZZ	11083	5M6214	PLUG,PIPE........................... UOC:V53	1
9	PAFZZ	11083	7S7809	CAP,FILLER OPENING.................. UOC:V53	1
10	XAFZZ	11083	7S7808	.CAP................................ UOC:V53	1
11	PAFZZ	11083	2P3230	.GASKET............................. UOC:V53	1
12	XAFZZ	11083	2S2846	.WASHER,FLAT........................ UOC:V53	1
13	XAFZZ	11083	9S9979	.RING............................... UOC:V53	1
14	XAFZZ	11083	7S7807	.INSERT............................. UOC:V53	1
15	PAFZZ	11083	1S0286	STUD................................ UOC:V53	1
16	PAFZZ	11083	0S1594	BOLT,MACHINE........................ UOC:V53	24
17	PAFZZ	11083	5M2894	WASHER,FLAT......................... UOC:V53	45
18	PAFZZ	11083	4N1418	GASKET.............................. UOC:V53	2
19	PAFZZ	11083	0S1588	BOLT,MACHINE........................ UOC:V53	9
20	XBFZZ	11083	6N5442	TUBE ASSY,OUTLET.................... UOC:V53	1
21	PAFZZ	11083	4N1419	GASKET.............................. UOC:V53	1
22	PAFZZ	11083	0S1595	BOLT,MACHINE........................ UOC:V53	2
23	PAFZZ	11083	8S9089	SCREW,CAP,HEXAGON H................. UOC:V53	2

(1) ITEM NO	(2) SMR CODE	(3) CAGEC	(4) PART NUMBER	(5) DESCRIPTION AND USABLE ON CODES(UOC)	(6) QTY
24	PAFZZ	11083	9M3116	GASKET................................ UOC:V53	1
25	PAFZZ	11083	6N9550	PLUG,MACHINE THREAD................ UOC:V53	1
26	PAFZZ	11083	L1143	BOLT,MACHINE....................... UOC:V53	1
27	PAFZZ	11083	9M2793	TEE,PIPE TO TUBE.................. UOC:V53	1
28	PBFZZ	96906	MS51504A8	ELBOW,PIPE TO TUBE................ UOC:V53	1
29	PAFZZ	11083	6N9256	HOSE ASSEMBLY,NONME............... UOC:V53	1
30	XBFZZ	11083	16842	TEE,37 DEG,FLRD................... UOC:V53	1
31	PAFZZ	11083	3S8664	CLIP................................ UOC:V53	3
32	PAFZZ	11083	6N9255	HOSE ASSEMBLY,NONME............... UOC:V53	1
33	PFOZZ	96906	MS51500A8-8	ADAPTER,STRAIGHT,PI............... UOC:V53	1
34	PAFZZ	11083	8M0547	ELBOW............................... UOC:V53	1
35	PAFZZ	11083	5P0598	CLAMP............................... UOC:V53	2
36	PAFZZ	24161	4177-8529	HOSE,PREFORMED.................... UOC:V53	1
37	PAFZZ	08484	HTM-350	CLAMP,HOSE......................... UOC:V53	4
38	PAFZZ	11083	4N7431	HOSE,PREFORMED.................... UOC:V53	2
39	XBFZZ	11083	7N6650	TUBE ASSY,INLET................... UOC:V53	1
40	PAFZZ	11083	6N5636	SHROUD,FAN,RADIATOR............... UOC:V53	3
41	XBFZZ	11083	6N5635	SHIELD ASSY,FAN................... UOC:V53	1
42	PAFZZ	11083	0L1351	BOLT,MACHINE...................... UOC:V53	14
43	XBFZZ	11083	6N5440	SHIELD ASSY....................... UOC:V53	1

END OF FIGURE

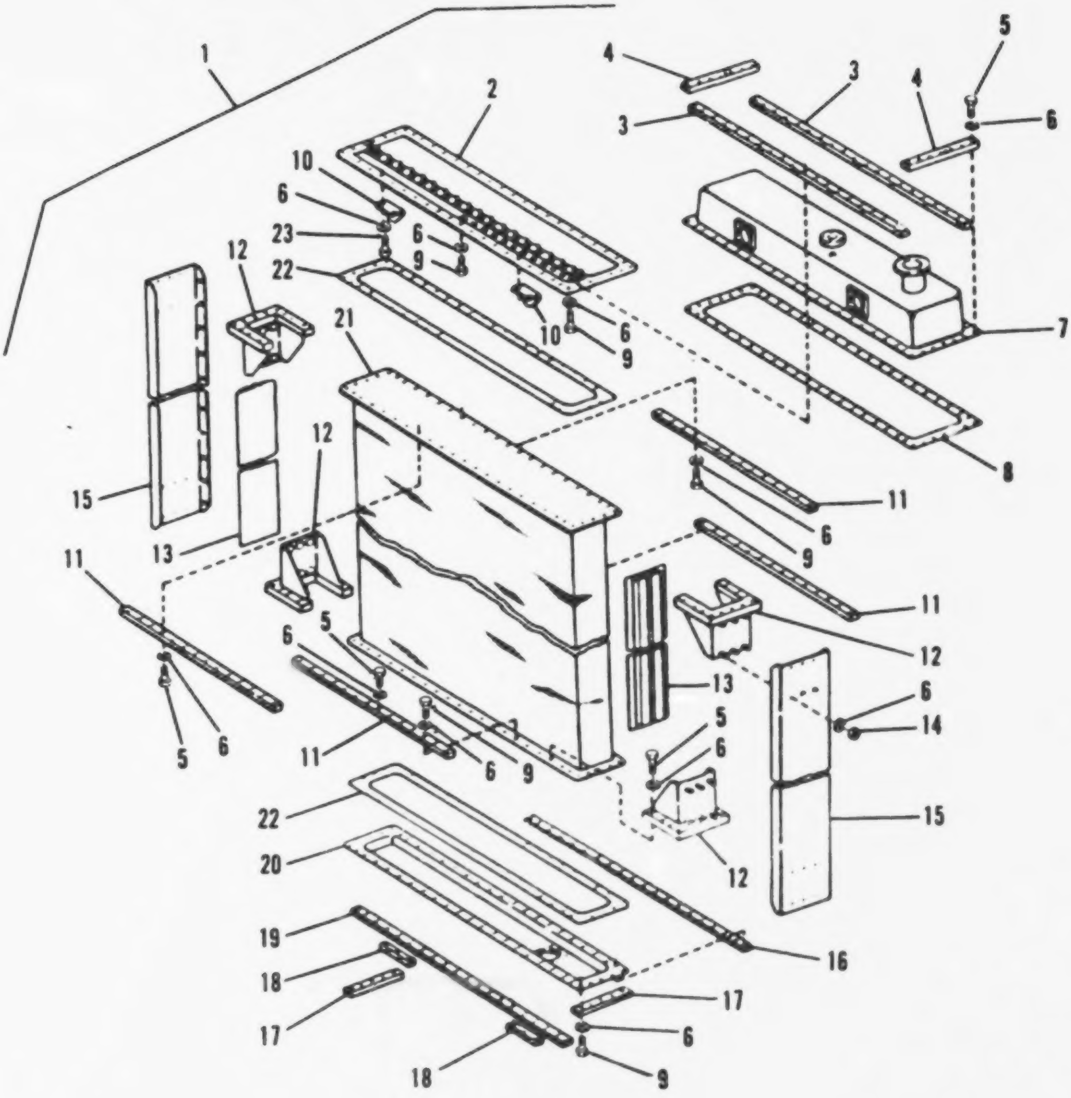

FIGURE 57. RADIATOR ASSEMBLY

GROUP 0501: RADIATOR

FIG. 57 RADIATOR ASSEMBLY

(1) ITEM NO	(2) SMR CODE	(3) CAGEC	(4) PART NUMBER	(5) DESCRIPTION AND USABLE ON CODES(UOC)	(6) QTY
1	PBOZZ	11083	8N5542	RADIATOR,ENGINE COO................ UOC:V53	1
2	XDFZZ	11083	4N7587	.PLATE ASSY,TOP TANK............... UOC:V53	1
3	XDFZZ	11083	4N7584	.STRIP............................. UOC:V53	1
4	PAFZZ	11083	7N4051	.MOLDING,METAL..................... UOC:V53	2
5	PAFZZ	11083	0S1590	.BOLT,MACHINE...................... UOC:V53	54
6	PAFZZ	11083	5M2894	.WASHER,FLAT....................... UOC:V53	158
7	XDFZZ	11083	6N9775	.TANK ASSY,RADIATOR................ UOC:V53	1
8	PAFZZ	11083	6N4942	.GASKET............................ UOC:V53	1
9	PAFZZ	11083	0S1591	.SCREW............................. UOC:V53	66
10	XDFZZ	11083	6N5485	.BRACKET........................... UOC:V53	2
11	XDFZZ	11083	7N4054	.STRIP............................. UOC:V53	4
12	XDFZZ	11083	7N8442	.BRKT ASSY......................... UOC:V53	4
13	XDFZZ	11083	8N5411	.DAMPER ASSY....................... UOC:V53	2
14	PAFZZ	15564	1377A	.NUT,PLAIN,HEXAGON................. UOC:V53	24
15	XDFZZ	11083	8N0335	.CHANNEL ASSY...................... UOC:V53	2
16	XDFZZ	11083	4N7583	.STRIP............................. UOC:V53	1
17	PAFZZ	11083	7N4039	.MOLDING,METAL..................... UOC:V53	2
18	XDFZZ	11083	6N5634	.BLOCK............................. UOC:V53	2
19	XDFZZ	11083	6N5639	.STRIP............................. UOC:V53	1
20	XDFZZ	11083	6N0414	.TANK ASSY,BOTTOM.................. UOC:V53	1
21	XAFZZ	11083	8N4971	.CORE ASSY,RADIATOR................ UOC:V53	1
22	PAFZZ	11083	6N4941	.GASKET............................ UOC:V53	2
23	PAFZZ	11083	0S1571	.SCREW,CAP,HEXAGON H............... UOC:V53	4

END OF FIGURE

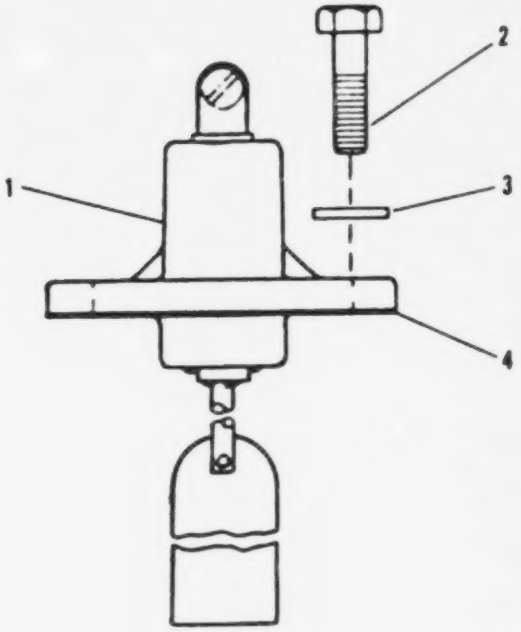

FIGURE 58. COOLANT FLOW SWITCH

(1) ITEM NO	(2) SMR CODE	(3) CAGEC	(4) PART NUMBER	(5) DESCRIPTION AND USABLE ON CODES(UOC)	(6) QTY
				GROUP 0503: WATER MANIFOLD, HEADERS, THERMOSTATS AND HOUSING GASKETS	
				FIG. 58 COOLANT FLOW SWITCH	
1	PAOZZ	11083	7N3606	SWITCH,PRESSURE..................... UOC:V53	1
2	PAOZZ	96906	MS90728-33	BOLT,MACHINE......................... UOC:V53	2
3	PAOZZ	11083	9M1974	WASHER,FLAT.......................... UOC:V53	2
4	PAOZZ	11083	4N3841	GASKET PART OF KIT P/N 5R4553 PART OF KIT P/N 6V236.................... UOC:V53	1

END OF FIGURE

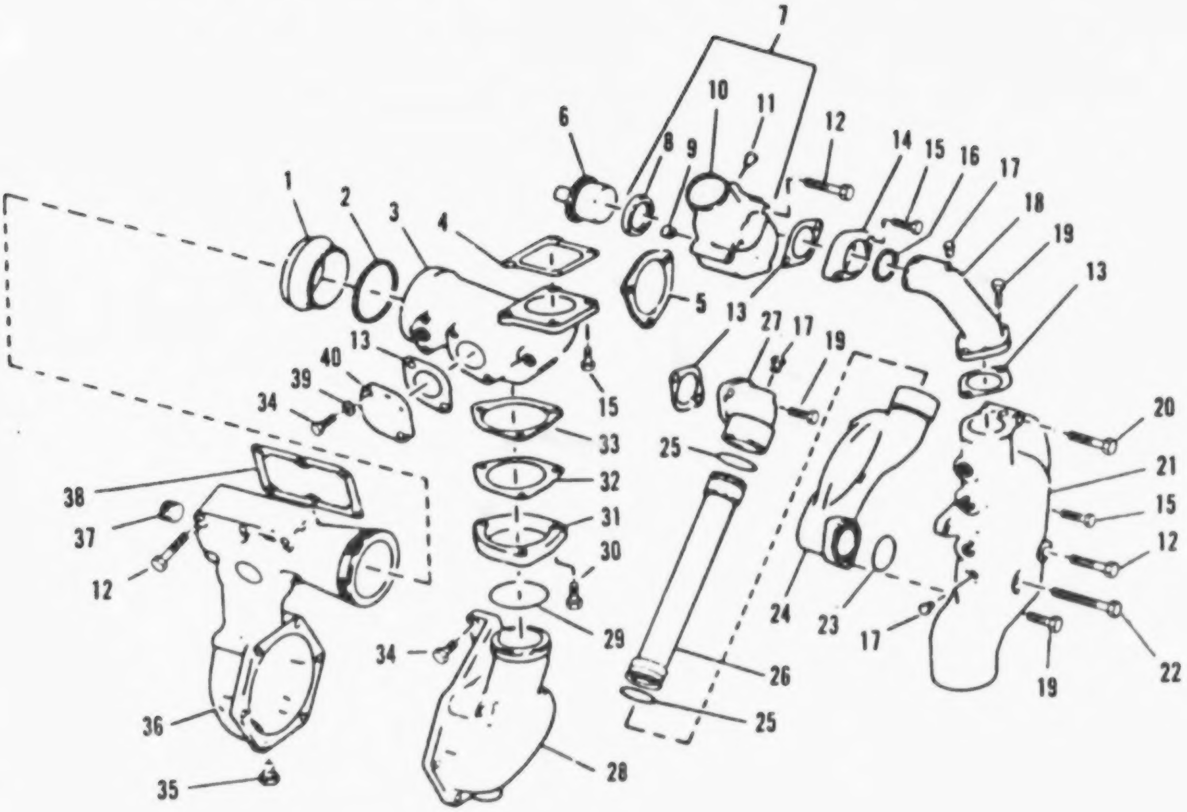

FIGURE 59. WATER LINES

(1) ITEM NO	(2) SMR CODE	(3) CAGEC	(4) PART NUMBER	(5) DESCRIPTION AND USABLE ON CODES(UOC)	(6) QTY
				GROUP 0503: WATER MANIFOLD, HEADERS, THERMOSTATS AND HOUSING GASKET	
				FIG. 59 WATER LINES	
1	XDOZZ	11083	6N0008	ADAPTER............................ UOC:V53	1
2	PAOZZ	11083	5F0149	RING PART OF KIT P/N 5R4553 PART OF KIT P/N 6V236......................... UOC:V53	1
3	XDOZZ	11083	6N7145	BONNET............................ UOC:V53	1
4	PAOZZ	11083	4N1946	GASKET PART OF KIT P/N 5R4553 PART OF KIT P/N 6N0144 PART OF KIT P/N 6V236.......................... UOC:V53	1
5	PAOZZ	11083	4N1156	GASKET PART OF KIT P/N 5R4553 PART OF KIT P/N 5P9843................ UOC:V53	2
6	PAOZZ	78493	4L313-3	THERMOSTAT,FLOW CC................ UOC:V53	2
7	PAOZZ	11083	4N0362	COVER ASSEMBLY..................... UOC:V53	2
8	PAOZZ	58312	3S9643-C0	.SEAL,PLAIN ENCASED PART OF KIT P/N 5R4553 PART OF KIT P/N 5P9843....... UOC:V53	1
9	PAOZZ	11083	2H1193	.FERRULE,REGULATOR C................ UOC:V53	2
10	XAOZZ	11083	6N2194	.COVER............................. UOC:V53	2
11	PAOZZ	96105	F190034	.PLUG,PIPE......................... UOC:V53	2
12	PAOZZ	11083	0S1619	BOLT,MACHINE....................... UOC:V53	13
13	PAOZZ	11083	4N0790	GASKET PART OF KIT P/N 5R4553 PART OF KIT P/N 6V236................. UOC:V53	4
14	XDOZZ	11083	4N1799	FLANGE............................. UOC:V53	1
15	PAOZZ	11083	0S1588	BOLT............................... UOC:V53	7
16	PAOZZ	11083	4F8824	PACKING,PREFORMED PART OF KIT P/N 5R4553 PART OF KIT P/N 5P9843....... UOC:V53	1
17	PAOZZ	11083	5M6214	PLUG,PIPE.......................... UOC:V53	3
18	XDOZZ	11083	6N1410	ELBOW.............................. UOC:V53	1
19	PAOZZ	11083	0S1594	BOLT,MACHINE....................... UOC:V53	5
20	PAOZZ	11083	L1143	BOLT,MACHINE....................... UOC:V53	1

(1) ITEM NO	(2) SMR CODE	(3) CAGEC	(4) PART NUMBER	(5) DESCRIPTION AND USABLE ON CODES(UOC)	(6) QTY
21	XDOZZ	11083	9N3312	COVER................................ UOC:V53	1
22	PAOZZ	96906	MS90728-75	SCREW,CAP,HEXAGON H................. UOC:V53	1
23	PAOZZ	11083	5K5959	PACKING,PREFORMED PART OF KIT P/N 5R4553.............................. UOC:V53	1
24	XDOZZ	11083	6N1412	ELBOW................................ UOC:V53	1
25	PAOZZ	11083	2H3927	GASKET PART OF KIT P/N 5R4553 PART OF KIT P/N 5P9843................... UOC:V53	2
26	XDCOO	11083	6N1413	TUBE ASSY........................... UOC:V53	1
27	XDOZZ	11083	6N1411	ELBOW............................... UOC:V53	1
28	XDOZZ	11083	4N6451	BONNET.............................. UOC:V53	1
29	PAOZZ	11083	7F2122	RETAINER,PACKING PART OF KIT P/N 5R4553 PART OF KIT P/N 6V236........ UOC:V53	1
30	PAOZZ	96906	MS90728-63	SCREW,CAP,HEXAGON H................. UOC:V53	3
31	XDOZZ	11083	4N2158	FLANGE.............................. UOC:V53	1
32	PAOZZ	11083	4N2159	GASKET PART OF KIT P/N 5R4553....... UOC:V53	2
33	XDOZZ	11083	4N2380	SPACER.............................. UOC:V53	1
34	PAOZZ	11083	1A2029	BOLT,MACHINE........................ UOC:V53	4
35	PAOZZ	11083	3J5390	PLUG,PIPE........................... UOC:V53	1
36	XDOZZ	11083	7N7642	BONNET.............................. UOC:V53	1
37	PAOZZ	11083	3B0551	PLUG,PIPE........................... UOC:V53	1
38	PAOZZ	11083	4N864	GASKET PART OF KIT P/N 5R4553 PART OF KIT P/N 6V236................... UOC:V53	1
39	PAOZZ	11083	5M2894	WASHER,FLAT......................... UOC:V53	2
40	PFOZZ	11083	4N0794	COVER............................... UOC:V53	1

END OF FIGURE

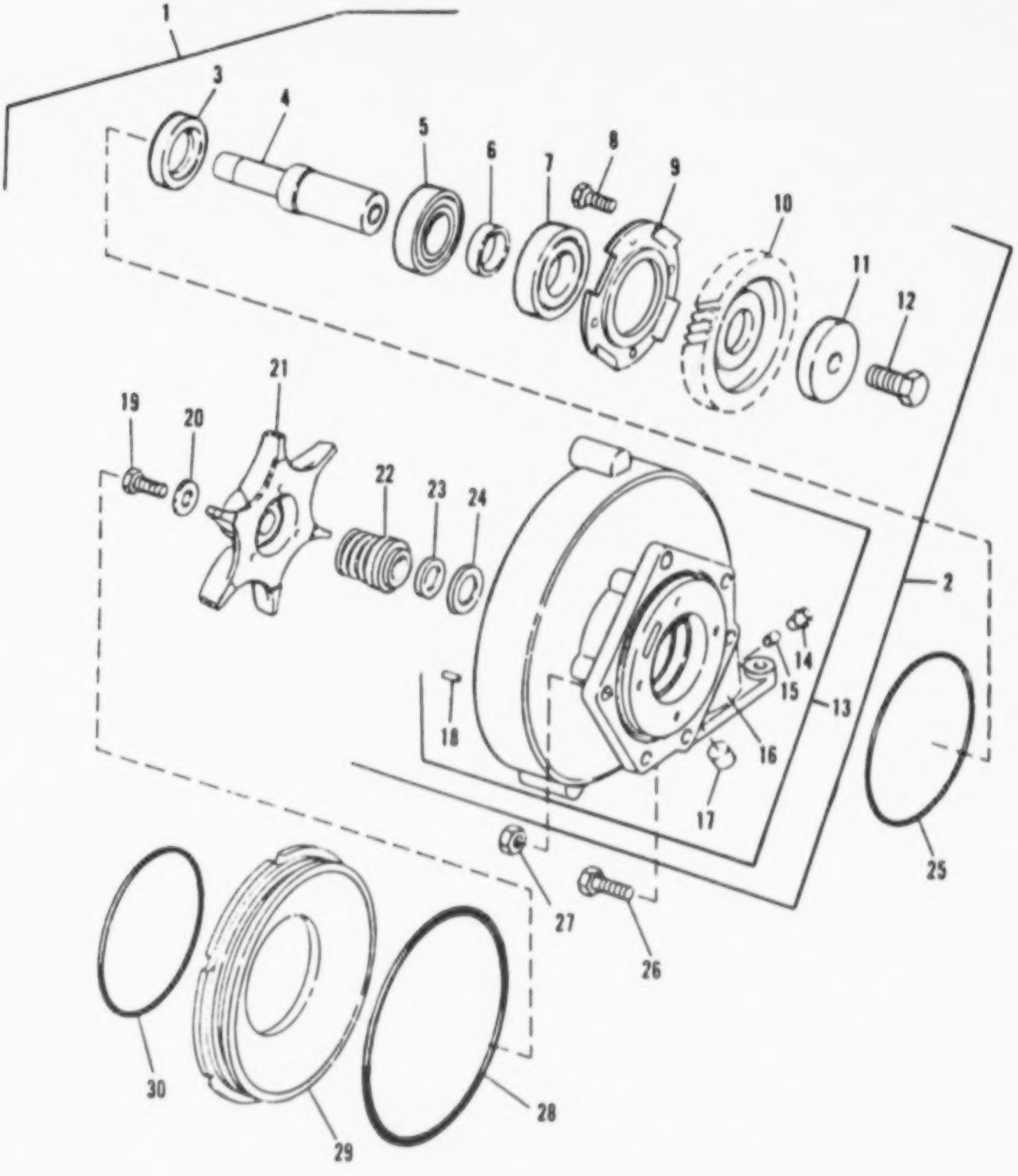

FIGURE 60. WATER PUMP ASSEMBLY

(1) ITEM NO	(2) SMR CODE	(3) CAGEC	(4) PART NUMBER	(5) DESCRIPTION AND USABLE ON CODES(UOC)	(6) QTY
				GROUP 0504: WATER PUMP	
				FIG. 60 WATER PUMP ASSEMBLY	
1	XDOFF	11083	4N1951	PUMP GRP,WATER........................ UOC:V53	1
2	XDOFF	11083	4N7498	.PUMP GRP,WATER,BSC................... UOC:V53	1
3	PAFZZ	11083	5P1713	..SEAL PART OF KIT P/N 5R4553....... UOC:V53	1
4	PFFZZ	11083	7W1821	..SHAFT.............................. UOC:V53	1
5	PFFZZ	11083	1B3867	..BEARING,BALL,ANNULA............... UOC:V53	1
6	PFFZZ	11083	2N7942	..SPACER............................. UOC:V53	1
7	PBFZZ	11083	2L5271	..BEARING,BALL,ANNULA PART OF KIT P/N 9N6289...................... UOC:V53	1
8	PAFZZ	96906	MS90728-36	..BOLT,MACHINE....................... UOC:V53	4
9	PAFZZ	11083	9N3033	..RETAINER,OIL SEAL.................. UOC:V53	1
10	XDFZZ	11083	4N1948	..GEAR............................... UOC:V53	1
11	PBFZZ	11083	2P3696	..RETAINER PART OF KIT P/N 9N6289... UOC:V53	1
12	PAFZZ	96906	MS90728-164	..SCREW,CAP,HEXAGON H............... UOC:V53	1
13	XAFFF	11083	4N1956	..HOUSING ASSY,WP.................... UOC:V53	1
14	PAFZZ	11083	5M6214	...PLUG,PIPE......................... UOC:V53	1
15	PBFZZ	11083	4M1336	...SLEEVE,COMPRESSION,............... UOC:V53	1
16	XAFZZ	11083	4N1941	...HOUSING........................... UOC:V53	1
17	PAFZZ	11083	4N5834	...FILTER ELEMENT,FLUI.............. UOC:V53	1
18	PAFZZ	11083	5H8985	...PIN............................... UOC:V53	1
19	PAFZZ	11083	0S1591	..SCREW.............................. UOC:V53	1
20	PAFZZ	11083	9M6527	..WASHER,FLAT........................ UOC:V53	1
21	PAFZZ	11083	4N1751	..IMPELLER,PUMP,WATER............... UOC:V53	1
22	PAFZZ	11083	6N9312	..PACKING,PREFORMED.................. UOC:V53	1
23	PAFZZ	11083	8S7762	..RING PART OF KIT P/N 5R4553....... UOC:V53	1
24	PAFZZ	11083	8S8821	..PACKING,PREFORMED PART OF KIT P/N	1

(1) ITEM NO	(2) SMR CODE	(3) CAGEC	(4) PART NUMBER	(5) DESCRIPTION AND USABLE ON CODES(UOC)	(6) QTY
				5R4553............................. UOC:V53	
25	PAOZZ	11083	4S5898	.PACKING,PREFORMED................. UOC:V53	1
26	PAOZZ	11083	0S1594	.BOLT,MACHINE...................... UOC:V53	1
27	PAOZZ	15564	1377A	.NUT,PLAIN,HEXAGON................. UOC:V53	4
28	PAOZZ	11083	5L5032	.PACKING,PREFORMED PART OF KIT P/N 5R4553............................. UOC:V53	1
29	XDOZZ	11083	4N5835	.ADAPTER,WP INLET.................. UOC:V53	1
30	PAOZZ	11083	5H5672	.PACKING,PREFORMED PART OF KIT P/N 5R4553............................. UOC:V53	1

END OF FIGURE

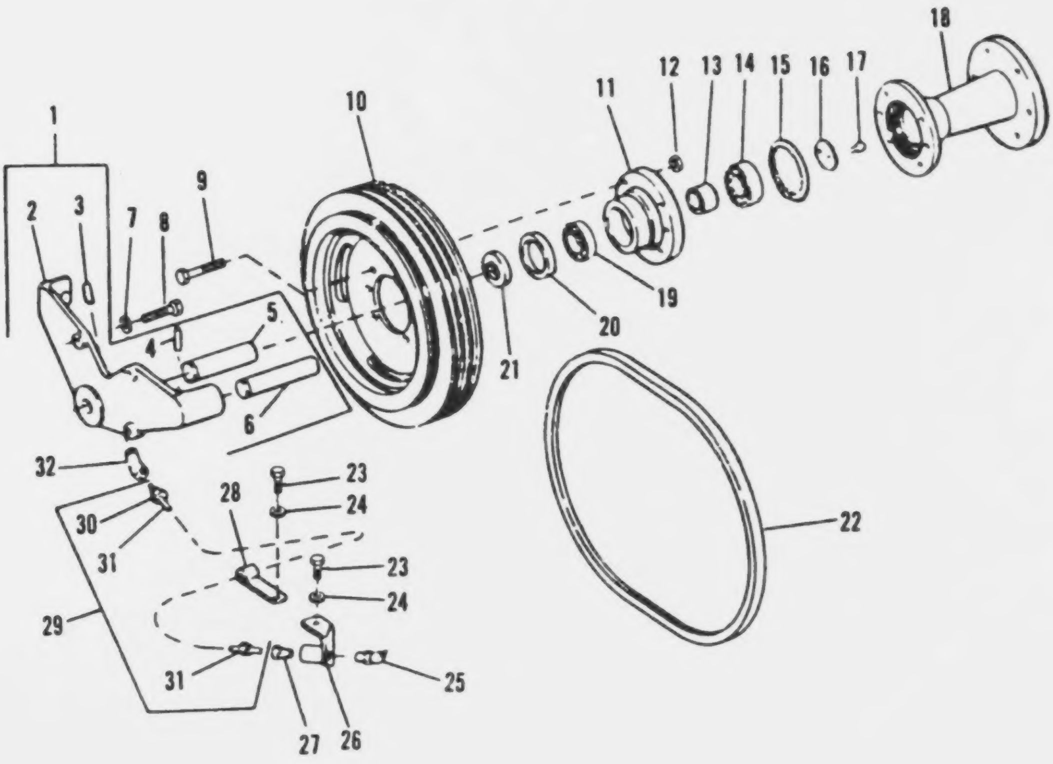

FIGURE 61. FAN DRIVE ASSEMBLY

(1) ITEM NO	(2) SMR CODE	(3) CAGEC	(4) PART NUMBER	(5) DESCRIPTION AND USABLE ON CODES(UOC)	(6) QTY
				GROUP 0505: FAN ASSEMBLY	
				FIG. 61 FAN DRIVE ASSEMBLY	
1	XBFFF	11083	6N5270	BRACKET ASSY,FAN.................. UOC:V53	1
2	XAFZZ	11083	6N5269	.BRACKET.......................... UOC:V53	1
3	PAFZZ	11083	5B5812	.PIN,STRAIGHT,HEADLE.............. UOC:V53	1
4	XDFZZ	80657	11BA011636	.PIN,STR,HDLS..................... UOC:V53	1
5	XAFZZ	11083	1P9946	.SHAFT,STRAIGHT................... UOC:V53	1
6	PAFZZ	11083	1S9209	.SHAFT............................ UOC:V53	1
7	PFFZZ	11083	2M849	WASHER,FLAT....................... UOC:V53	3
8	PAFZZ	11083	1A1460	BOLT,MACHINE...................... UOC:V53	3
9	PAFZZ	11083	0T0573	CAPSCREW,FUEL PUMP................ UOC:V53	6
10	PBFZZ	11083	4N8596	PULLEY,FAN........................ UOC:V53	1
11	PBFZZ	11083	2P1757	HUB,FAN........................... UOC:V53	1
12	PAFZZ	15564	1377A	NUT,PLAIN,HEXAGON................. UOC:V53	6
13	PFFZZ	11083	2P2243	SPACER,FAN........................ UOC:V53	1
14	PAFZZ	11083	3L1425	BEARING,BALL,ANNULA............... UOC:V53	1
15	PAFZZ	11083	9F4446	PACKING,PREFORMED PART OF KIT P/N 5R4553........................... UOC:V53	1
16	PAFZZ	11083	7N2900	WASHER,RETAINING.................. UOC:V53	1
17	PAFZZ	11083	5P7979	SCREW,SELF-LOCKING................ UOC:V53	2
18	XBFZZ	11083	7N3629	ADAPTER,FAN....................... UOC:V53	1
19	PFFZZ	02432	ATU47	BEARING,BALL,ANNULA............... UOC:V53	1
20	PAFZZ	11083	5S2106	SEAL,PLAIN ENCASED PART OF KIT P/N 5R4553........................... UOC:V53	1
21	PFFZZ	11083	5S9062	SPACER............................ UOC:V53	1
22	PAOZZ	11083	6N7053	BELT,V MATCHED SET................ UOC:V53	1
23	PAFZZ	11083	0S1588	BOLT.............................. UOC:V53	2

(1) ITEM NO	(2) SMR CODE	(3) CAGEC	(4) PART NUMBER	(5) DESCRIPTION AND USABLE ON CODES(UOC)	(6) QTY
24	PAFZZ	11083	5M2854	WASHER,FLAT........................ UOC:V53	2
25	PAFZZ	96906	MS15003-4	FITTING,LUBRICATION................ UOC:V53	1
26	XBFZZ	11083	6N4111	BRACKET ASSY....................... UOC:V53	1
27	PFFZZ	11083	6L3616	FITTING............................ UOC:V53	1
28	PAFZZ	11083	7D1728	CLIP,RETAINING..................... UOC:V53	1
29	XBFFF	11083	6N5675	TUBE ASSY.......................... UOC:V53	1
30	PAFZZ	11083	4B8756	.INVERTED NUT,TUBE C............... UOC:V53	2
31	PFFZZ	11083	5P0189	.TUBE,METALLIC..................... UOC:V53	1
32	PAFZZ	11083	9S7720	ELBOW,PIPE TO TUBE................. UOC:V53	1

END OF FIGURE

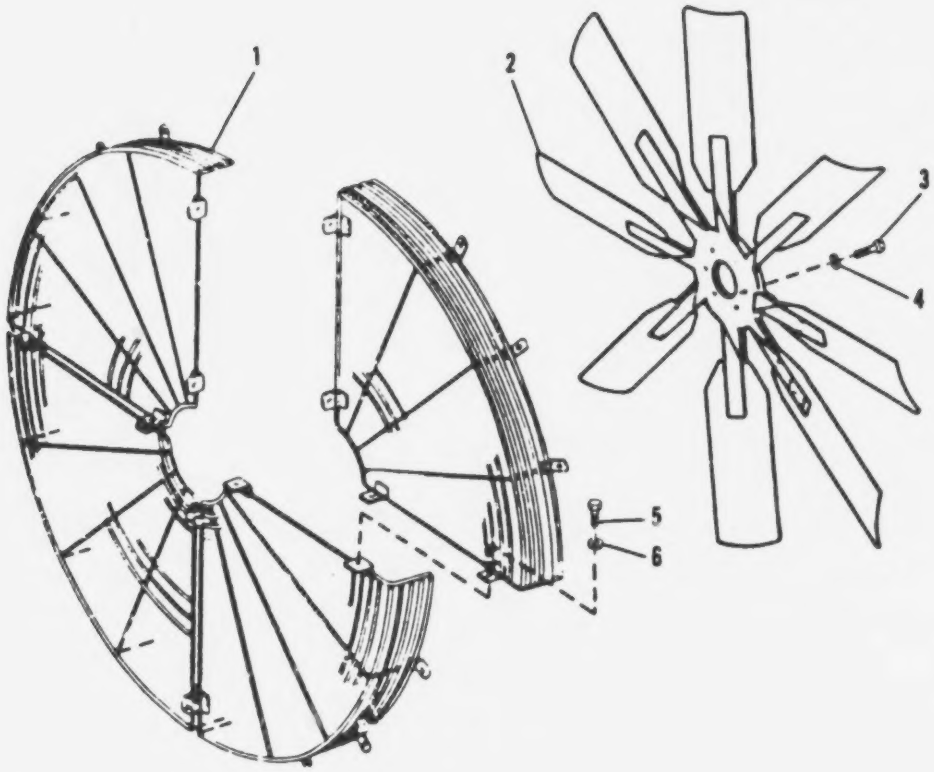

FIGURE 62. FAN AND GUARD ASSEMBLY

(1) ITEM NO	(2) SMR CODE	(3) CAGEC	(4) PART NUMBER	(5) DESCRIPTION AND USABLE ON CODES(UOC)	(6) QTY
				GROUP 0505: FAN ASSEMBLY	
				FIG. 62 FAN AND GUARD ASSEMBLY	
1	XDOZZ	11083	7N2345	GUARD ASSY........................... UOC:V53	4
2	XDOZZ	11083	6N5339	SPIDER ASSY,FAN...................... UOC:V53	1
3	PAOZZ	11083	S1587	BOLT,MACHINE......................... UOC:V53	6
4	PFFZZ	11083	2M849	WASHER,FLAT.......................... UOC:V53	6
5	PAOZZ	11083	0L1351	BOLT,MACHINE......................... UOC:V53	20
6	PAOZZ	11083	5M2894	WASHER,FLAT.......................... UOC:V53	20

END OF FIGURE

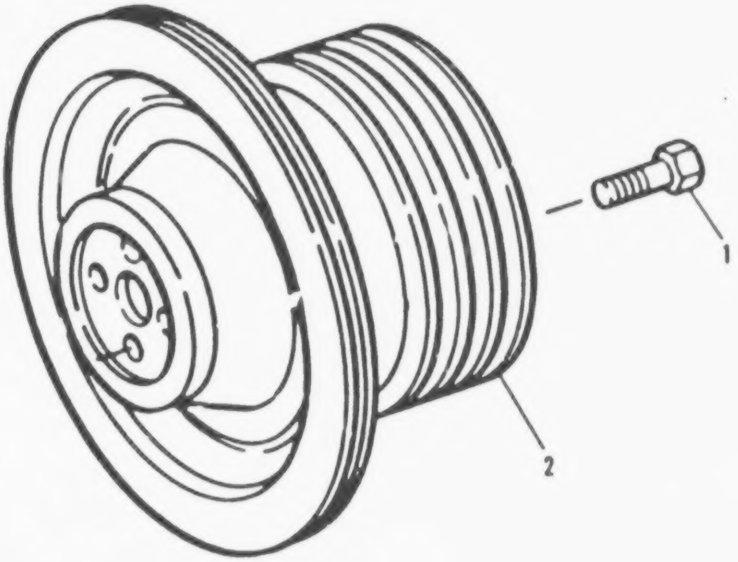

FIGURE 63. CRANKSHAFT PULLEY ASSEMBLY

(1) ITEM NO	(2) SMR CODE	(3) CAGEC	(4) PART NUMBER	(5) DESCRIPTICN AND USABLE CN CODES(UOC)	(6) CTY
				GRCUP 0505: FAN ASSEMBLY	
				FIG. 63 CRANKSHAFT PULLEY ASSEMBLY	
1	PAOZZ	11C83	S1566	BOLT,MACHINE......................... LCC:V53	4
2	XDOZZ	11083	6N5300	PULLEY,CSHAFT....................... LCC:V53	1

END OF FIGURE

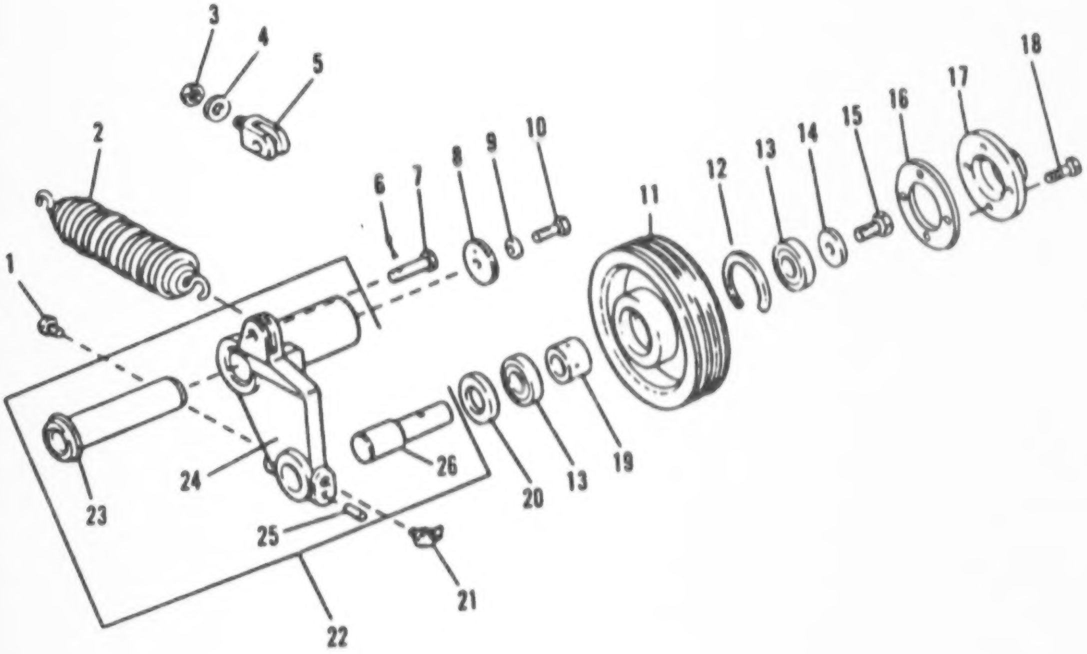

FIGURE 64. BELT TIGHTENER ASSEMBLY

(1) ITEM NO	(2) SMR CODE	(3) CAGEC	(4) PART NUMBER	(5) DESCRIPTION AND USABLE ON CODES(UOC)	(6) QTY
				GROUP 0505: FAN ASSEMBLY	
				FIG. 64 BELT TIGHTENER ASSEMBLY	
1	PAOZZ	11083	5M6214	PLUG,PIPE........................ UOC:V53	1
2	XBOZZ	11083	7N5959	SPRING........................ UOC:V53	1
3	PAOZZ	96906	MS51967-14	NUT,PLAIN,HEXAGON.................. UOC:V53	1
4	PFFZZ	11083	2M849	WASHER,FLAT........................ UOC:V53	1
5	XBOZZ	11083	2S6689	RETAINER,SPRING.................... UOC:V53	1
6	PAOZZ	96906	MS24665-353	PIN,COTTER........................ UOC:V53	2
7	PFOZZ	11083	0S0175	PIN........................ UOC:V53	2
8	PFOZZ	11083	2M2742	PLATE RETAINER.................... UOC:V53	1
9	PAOZZ	11083	5M2854	WASHER,FLAT........................ UOC:V53	1
10	PAOZZ	11083	0L1351	BOLT,MACHINE........................ UOC:V53	1
11	PBOZZ	11083	6N3641	PULLEY,GROOVE.................... UOC:V53	1
12	PFOZZ	11083	8B2327	RING,RETAINING.................... UOC:V53	1
13	PFOZZ	11083	6B1124	BEARING,BALL,ANNULA................ UOC:V53	2
14	PAOZZ	78286	S14-35-5017	WASHER,FLAT........................ UOC:V53	1
15	PAOZZ	96906	MS18154-58	SCREW,CAP,HEXAGON H................ UOC:V53	1
16	PAOZZ	11083	2S6151	GASKET PART OF KIT P/N 5R4553....... UOC:V53	1
17	PFOZZ	11083	2S6150	PLATE,FAN BELT TIGH................ UOC:V53	1
18	PAOZZ	96906	MS90728-34	BOLT,MACHINE........................ UOC:V53	4
19	PFOZZ	11083	1S8687	SPACER........................ UOC:V53	1
20	PAOZZ	11083	5M5735	SEAL,PLAIN ENCASED PART OF KIT P/N 5R4553........................ UOC:V53	1
21	PAOZZ	96906	MS15003-4	FITTING,LUBRICATION................ UOC:V53	1
22	XBOOO	11083	6N3765	ARM ASSY,BELT TTNG.................. UOC:V53	1
23	XBOZZ	03199	82154	.BUSHING ASSY...................... UOC:V53	1
24	XBOZZ	11083	6N3766	.ARM,BELT TTNG......................	1

(1) ITEM NO	(2) SMR CODE	(3) CAGEC	(4) PART NUMBER	(5) DESCRIPTION AND USABLE ON CODES(UOC)	(6) QTY
				UOC:V53	
25	XDOZZ	80657	11BAC11636	.PIN,STR,HDLS........................ UOC:V53	1
26	XAOZZ	11083	8N4550	.SHAFT,BELT TTNG PUL................ UOC:V53	1

END OF FIGURE

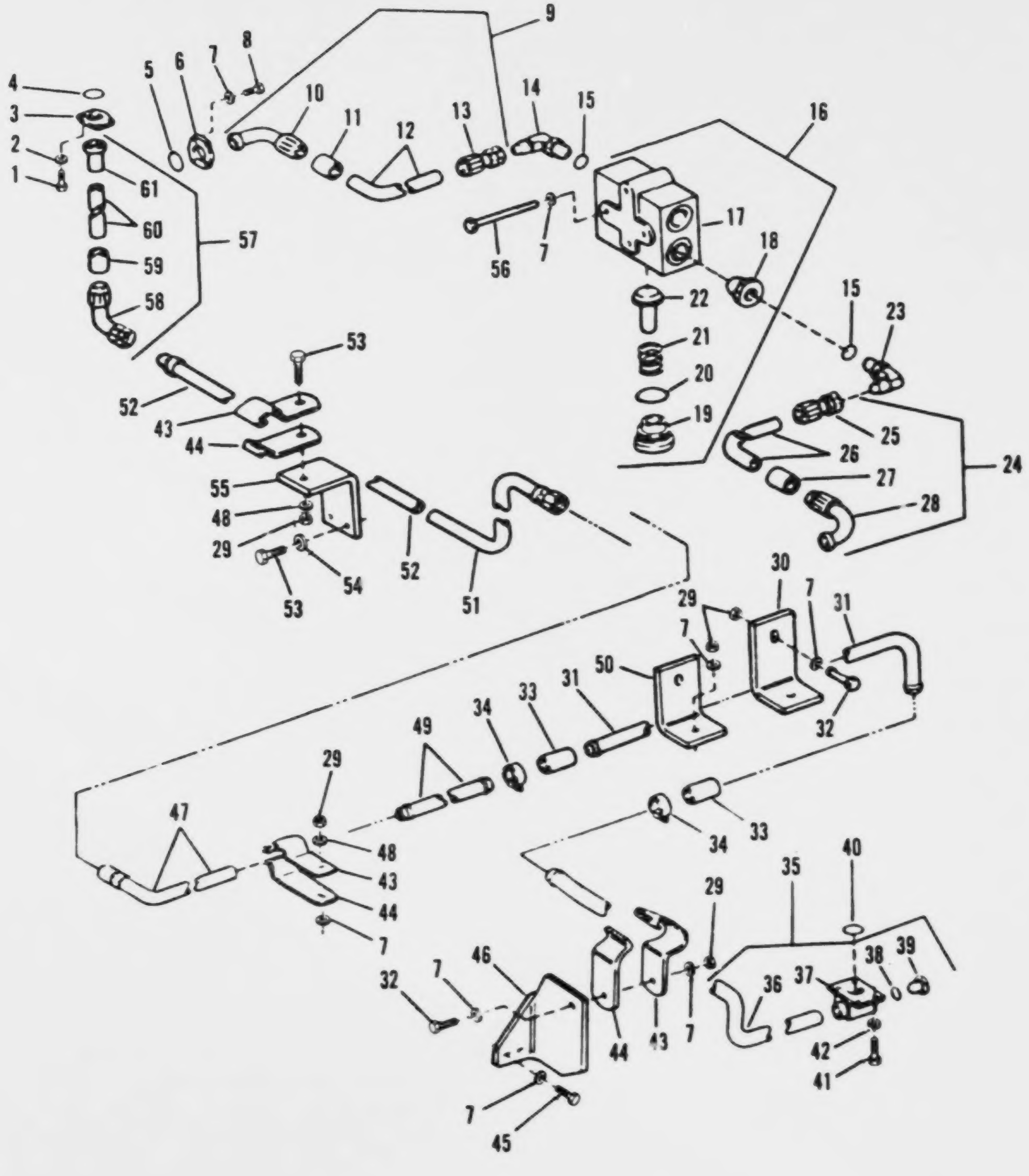

FIGURE 65. HYDRAULIC OIL COOLER LINES

(1) ITEM NO	(2) SMR CODE	(3) CAGEC	(4) PART NUMBER	(5) DESCRIPTION AND USABLE ON CODES(UOC)	(6) QTY
				GROUP 0507: AUXILIARY COOLING	
				FIG. 65 HYDRAULIC OIL COOLER LINES	
1	PAFZZ	96906	MS90728-89	SCREW,CAP,HEXAGON H.......................... UOC:V53	4
2	PAFZZ	11083	5P8244	WASHER,FLAT.......................... UOC:V53	4
3	PFFZZ	11083	1P4578	FLANGE,PIPE.......................... UOC:V53	2
4	PAFZZ	11083	4J0522	PACKING,PREFORMED.................. UOC:V53	1
5	PAFZZ	11083	4J0520	PACKING,PREFORMED.................. UOC:V53	2
5	PAFZZ	81349	M83248/2-218	PACKING,PREFORMED.................. UOC:V53	2
6	PFFZZ	11083	1P4577	FLANGE,PIPE.......................... UOC:V53	4
7	PAFZZ	11083	5M2894	WASHER,FLAT.......................... UOC:V53	26
8	PAFZZ	11083	0S1588	BOLT,MACHINE.......................... UOC:V53	8
9	PAOZZ	11083	3V0188	HOSE ASSY.......................... UOC:V53	1
10	PAFZZ	11083	3S6503	.ELBOW,FLANGE TO HOS.................. UOC:V53	1
11	PAFZZ	11083	3S7252	.SLEEVE.......................... UOC:V53	2
12	PAFZZ	11083	8S9355	.HOSE,SPECIAL.......................... UOC:V53	1
13	PAFZZ	11083	8S3918	.ADAPTER,STRAIGHT,TU.................. UOC:V53	1
14	XDFZZ	32705	307951	DUST COVER.......................... UOC:V53	3
15	PAFZZ	11083	7M8485	SEAL,ADAPTER,MOTOR.................. UOC:V53	4
16	XDFFF	11083	9J4682	VALVE GRP,RELIEF.................. UOC:V53	1
17	XAFZZ	11083	9J4683	.BODY,CHECK VALVE.................. UOC:V53	1
18	XDFZZ	57711	1720-253	.PLUG, SEALING.................. UOC:V53	4
19	XDFZZ	11083	9J3493	.PLUG.......................... UOC:V53	1
20	PAFZZ	11083	7M8485	.SEAL,ADAPTER,MOTOR.................. UOC:V53	1
21	XDFZZ	11083	9J4751	.SPRING.......................... UOC:V53	1
22	XAFZZ	11083	9J3517	.VALVE.......................... UOC:V53	1
23	PAFZZ	11083	307935	CONNECTOR.......................... UOC:V53	1

(1) ITEM NO	(2) SMR CODE	(3) CAGEC	(4) PART NUMBER	(5) DESCRIPTION AND USABLE ON CODES(UOC)	(6) QTY
24	MFFZZ	11083	3V0189	HOSE ASSY............................... UOC:V53	1
25	PAFZZ	11083	8S3918	.ADAPTER,STRAIGHT,TU................. UOC:V53	1
26	PAFZZ	11083	8S9355	.HOSE,SPECIAL........................ UOC:V53	1
27	PAFZZ	11083	3S7252	.SLEEVE.............................. UOC:V53	2
28	PFFZZ	11083	3S8503	.ELBOW,FLANGE TO HOS................. UOC:V53	1
29	PAFZZ	15564	1377A	NUT,PLAIN,HEXAGON.................... UOC:V53	10
30	XDFZZ	11083	2V2691	BRACKET.............................. UOC:V53	1
31	XDFZZ	11083	3V0190	TUBE,STEEL........................... UOC:V53	1
32	PAFZZ	11083	1A2029	BOLT,MACHINE......................... UOC:V53	3
33	PAFZZ	11083	5P2094	HOSE................................. UOC:V53	4
34	PAFZZ	11083	5P181	CLAMP................................ UOC:V53	8
35	XDFFF	11083	3V0172	TUBE ASSY............................ UOC:V53	1
36	XAFZZ	11083	3V0165	.TUBE,STEEL.......................... UOC:V53	1
37	XDFZZ	11083	1P5795	.ELBOW,HYDR.......................... UOC:V53	1
38	PAFZZ	99517	A180-119MILP25732	.PACKING,PREFORMED................... UOC:V53	1
39	PAFZZ	11083	9S4183	.PLUG,ASSEMBLY....................... UOC:V53	1
40	PAFZZ	11083	1P3703	PACKING,PREFORMED.................... UOC:V53	1
41	PAFZZ	11083	L1143	BOLT,MACHINE......................... UOC:V53	4
42	PAFZZ	96906	MS35338-45	WASHER,LOCK.......................... UOC:V53	4
43	XDFZZ	11083	6K5535	CLIP................................. UOC:V53	7
44	XDFZZ	11083	6K5536	BRACKET.............................. UOC:V53	7
45	PAFZZ	11083	0L1351	BOLT,MACHINE......................... UOC:V53	2
46	XDFZZ	11083	3V0423	BRACKET.............................. UOC:V53	1
47	XDFZZ	11083	3V0166	TUBE ASSY............................ UOC:V53	1
48	PFFZZ	11083	2M849	WASHER,FLAT.......................... UOC:V53	10
49	XDFZZ	11083	3V0191	TUBE,STEEL........................... UOC:V53	1

(1) ITEM NO	(2) SMR CODE	(3) CAGEC	(4) PART NUMBER	(5) DESCRIPTION AND USABLE ON CODES(UOC)	(6) QTY
50	XDFZZ	11083	3VC4C3	BRACKET................................ UOC:V53	1
51	XDFZZ	11C83	3VC163	TUBE ASSY.............................. UOC:V53	1
52	XDFZZ	11083	5R4456	TUBE ASSY.............................. UOC:V53	1
53	PAFZZ	11083	0S1595	BOLT,MACHINE........................... UOC:V53	2
54	PAFZZ	11083	5P1076	WASHER,SHOULDERED A.................... UOC:V53	2
55	XDFZZ	11083	5R4480	BRACKET................................ UOC:V53	1
56	PAFZZ	11083	L1352	BOLT,MACHINE........................... UOC:V53	2
57	PAFZZ	11083	2V3785	HOSE ASSY.............................. UOC:V53	1
58	XDFZZ	11083	9S9724	.COUPLING ASSY,COLLE................... UOC:V53	1
59	PAFZZ	11083	3S7166	.PLUNGER,DETENT........................ UOC:V53	2
60	PAFZZ	11083	9S247	.HOSE,NONMETALLIC...................... UOC:V53	1
61	XDFZZ	11C83	5S3049	.STEM ASSY,COLLET...................... UOC:V53	1

END OF FIGURE

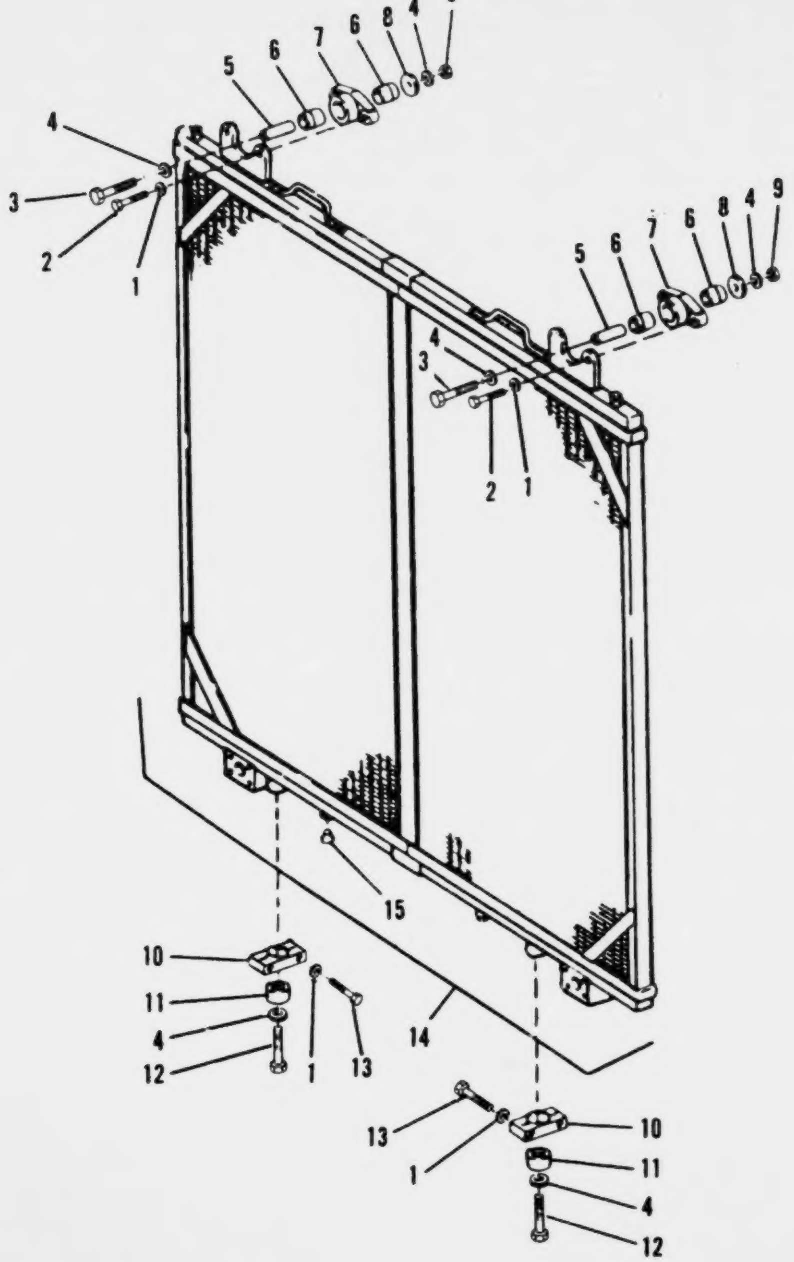

FIGURE 66. HYDRAULIC OIL COOLER ASSEMBLY

(1) ITEM NO	(2) SMR CODE	(3) CAGEC	(4) PART NUMBER	(5) DESCRIPTION AND USABLE ON CODES(UOC)	(6) QTY
				GROUP 0507: AUXILIARY COOLING	
				FIG. 66 HYDRAULIC OIL COOLER ASSEMBLY	
1	PAFZZ	11083	5M2894	WASHER,FLAT........................... UOC:V53	8
2	PAFZZ	11083	1A2029	BOLT,MACHINE.......................... UOC:V53	4
3	PAFZZ	11083	1D4566	BOLT,MACHINE.......................... UOC:V53	2
4	PFFZZ	11083	2M849	WASHER,FLAT........................... UOC:V53	6
5	PFFZZ	11083	1P5411	SLEEVE................................ UOC:V53	2
6	PFFZZ	11083	1P5412	BUSHING............................... UOC:V53	4
7	XDFZZ	11083	2P6104	ADAPTER............................... UOC:V53	2
8	PFFZZ	11083	1J8965	WASHER,FLAT........................... UOC:V53	2
9	PAFZZ	96906	MS51967-14	NUT,PLAIN,HEXAGON..................... UOC:V53	2
10	PAFZZ	11083	9M8867	CLAMP,HUB............................. UOC:V53	2
11	PAFZZ	11083	3H6726	BUMPER,NONMETALLIC.................... UOC:V53	2
12	PAFZZ	11083	2B947	BOLT,MACHINE.......................... UOC:V53	2
13	PAFZZ	11083	L2070	BOLT,MACHINE.......................... UOC:V53	4
14	XDFFF	46529	A183073	CORE ASSY............................. UOC:V53	1
15	PAFZZ	11083	5M6214	.PLUG,PIPE............................ UOC:V53	4

END OF FIGURE

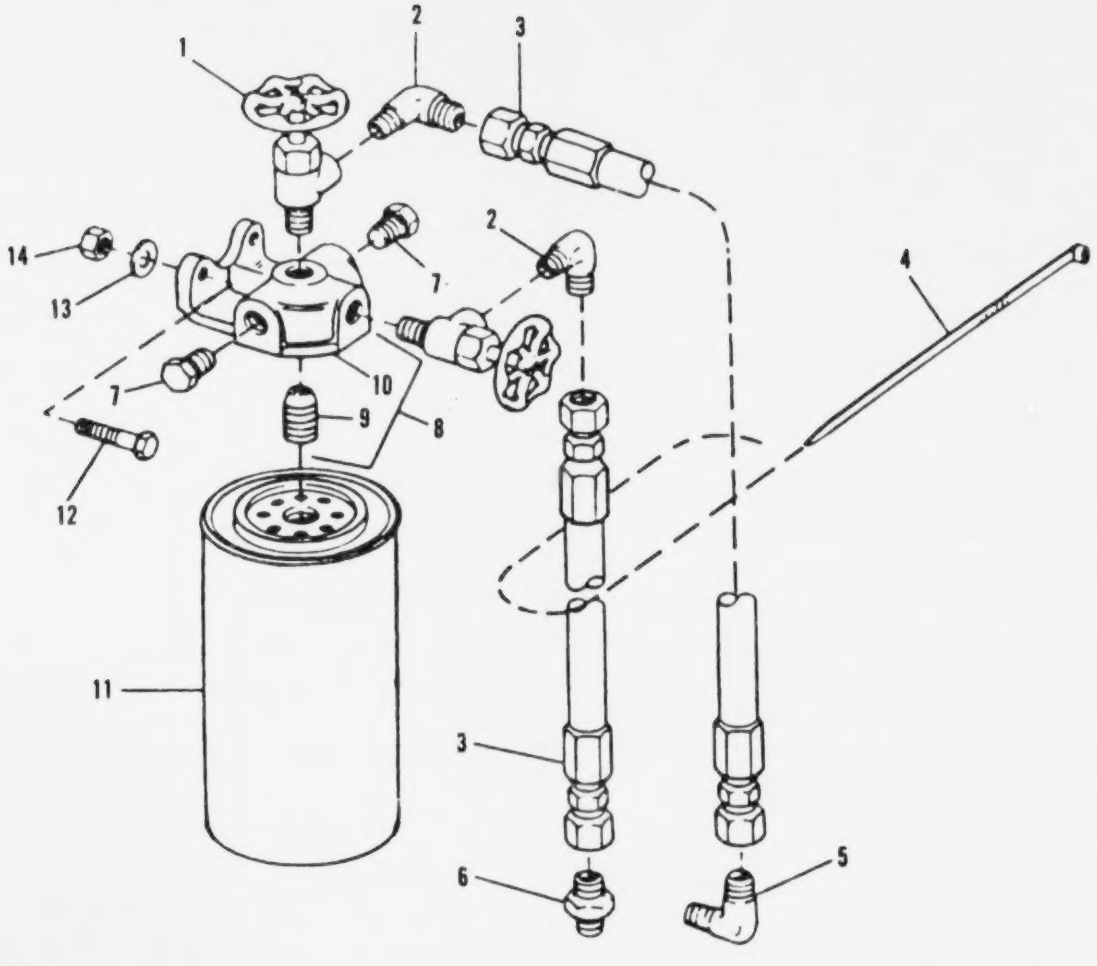

FIGURE 67. COOLANT FILTER ASSEMBLY

(1) ITEM NO	(2) SMR CODE	(3) CAGEC	(4) PART NUMBER	(5) DESCRIPTION AND USABLE ON CODES(UOC)	(6) QTY
				GROUP 0508: WATER FILTER	
				FIG. 67 COOLANT FILTER ASSEMBLY	
1	PAOZZ	93061	V405P-6-6	VALVE,CHECK........................... UOC:V53	2
2	PAOZZ	96906	MS51504A6-6	ELBOW,PIPE TO TUBE................. UOC:V53	2
3	PAOZZ	11083	9L5158	HOSE ASSEMBLY,NONME................ UOC:V53	2
4	PAOZZ	11083	3S2093	STRAP................................... UOC:V53	2
5	PAOZZ	30780	6CBTXS	ELBOW,PIPE TO TUBE................. UOC:V53	1
6	PAOZZ	79470	C5205X6X6	ADAPTER,STRAIGHT,PI................ UOC:V53	1
7	PAOZZ	11083	3J5390	PLUG,PIPE............................. UOC:V53	2
8	PAOZZ	11083	9N3668	HOUSING,TRANSMISSIC................ UOC:V53	1
9	PAOZZ	11083	9N3645	.PIN..................................... UOC:V53	1
10	XAOZZ	11083	9N3667	.BASE.................................... UOC:V53	1
11	PAOZZ	37099	LFW2055	FILTER ELEMENT,FLUI................ UOC:V53	1
12	PAOZZ	11083	0S1591	SCREW.................................... UOC:V53	2
13	PAOZZ	11083	5M2894	WASHER,FLAT........................... UOC:V53	2
14	PAOZZ	15564	1377A	NUT,PLAIN,HEXAGON.................. UOC:V53	2

END OF FIGURE

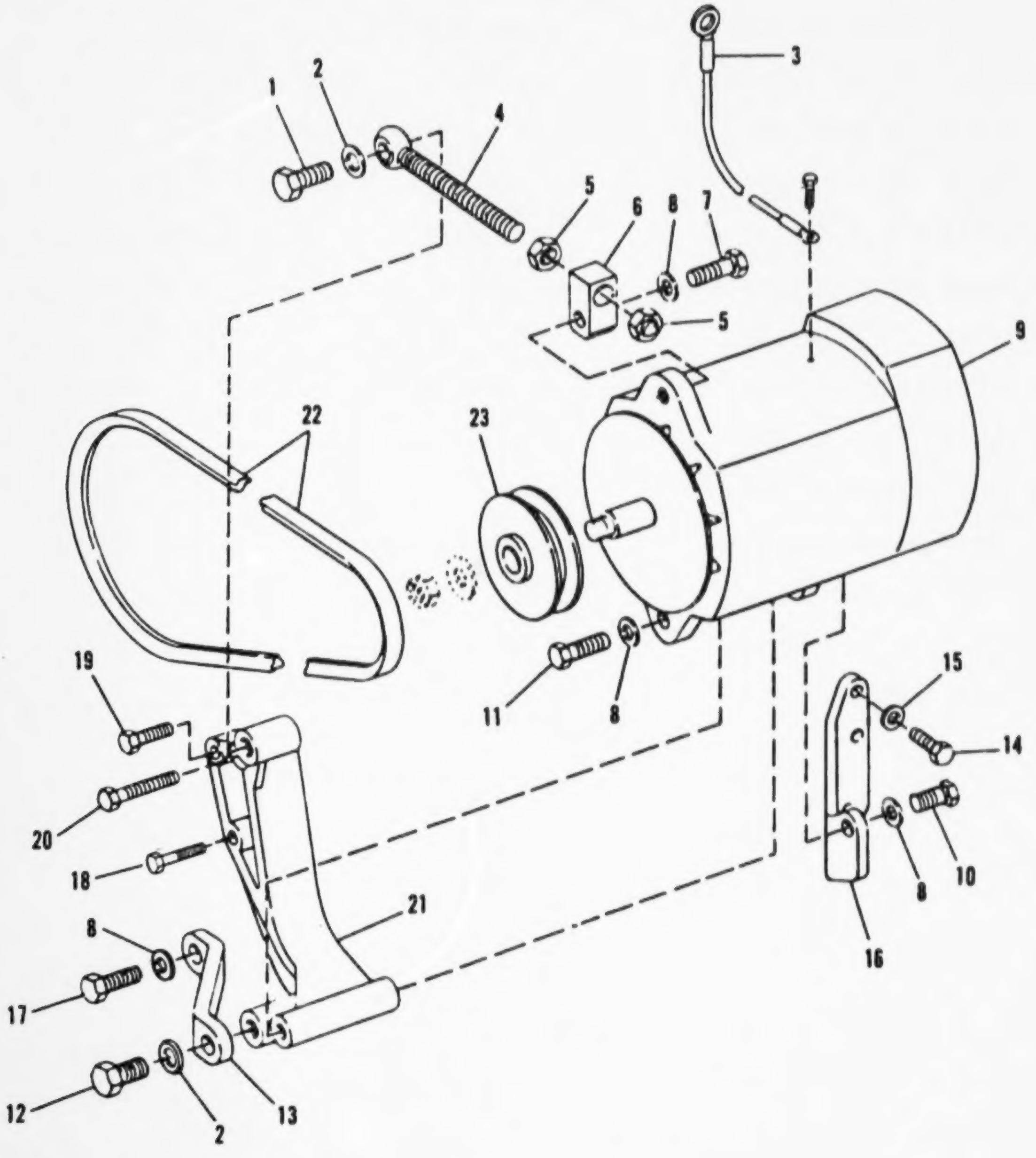

FIGURE 68. ALTERNATOR AND BELT ASSEMBLY

(1) ITEM NO	(2) SMR CODE	(3) CAGEC	(4) PART NUMBER	(5) DESCRIPTION AND USABLE ON CODES(UOC)	(6) QTY
				GROUP 06: ELECTRICAL SYSTEM	
				GROUP 0601: ALTERNATOR	
				FIG. 68 ALTERNATOR AND BELT ASSEMBLY	
1	PAOZZ	96906	MS90728-163	SCREW,CAP,HEXAGON H.................. UOC:V53	1
2	PAOZZ	11083	4D3704	WASHER,FLAT.......................... UOC:V53	1
3	XBOZZ	11083	5H0837	WIRE ASSY............................ UOC:V53	1
4	PAOZZ	11083	1S4698	ROD.................................. UOC:V53	1
5	PAOZZ	11083	1D5118	NUT,PLAIN,HEXAGON.................... UOC:V53	2
6	PAOZZ	11083	8S5383	BLOCK................................ UOC:V53	1
7	PAOZZ	11083	S1587	BOLT,MACHINE......................... UOC:V53	1
8	PFFZZ	11083	2M849	WASHER,FLAT.......................... UOC:V53	4
9	PAOFF	16764	1117248	GENERATOR,ENGINE AC.................. UOC:V53	1
10	PAOZZ	11083	1A1460	BOLT,MACHINE......................... UOC:V53	1
11	PAOZZ	96906	MS90728-113	SCREW,CAP,HEXAGON H.................. UOC:V53	1
12	PAOZZ	96906	MS90728-163	SCREW,CAP,HEXAGON H.................. UOC:V53	1
13	XBOZZ	11083	6N9366	BRACKET.............................. UOC:V53	1
14	PAOZZ	96906	MS90728-8	SCREW,CAP,HEXAGON H.................. UOC:V53	3
15	PAOZZ	11083	5M2894	WASHER,FLAT.......................... UOC:V53	3
16	XBOZZ	11083	6N9364	BRACKET.............................. UOC:V53	1
17	PAOZZ	11083	0S1595	BOLT,MACHINE......................... UOC:V53	1
18	PAOZZ	11083	8S9191	BOLT,MACHINE......................... UOC:V53	1
19	PAOZZ	11083	0S1571	SCREW,CAP,HEXAGON H.................. UOC:V53	1
20	PAOZZ	96906	MS90728-78	SCREW,CAP,HEXAGON H.................. UOC:V53	1
21	XDOZZ	11083	4N6413	SUPPORT.............................. UOC:V53	1
22	PAOZZ	11083	9L6639	BELT,V............................... UOC:V53	1
23	PAOZZ	11083	4N8225	PULLEY,GROOVE........................ UOC:V53	1

END OF FIGURE

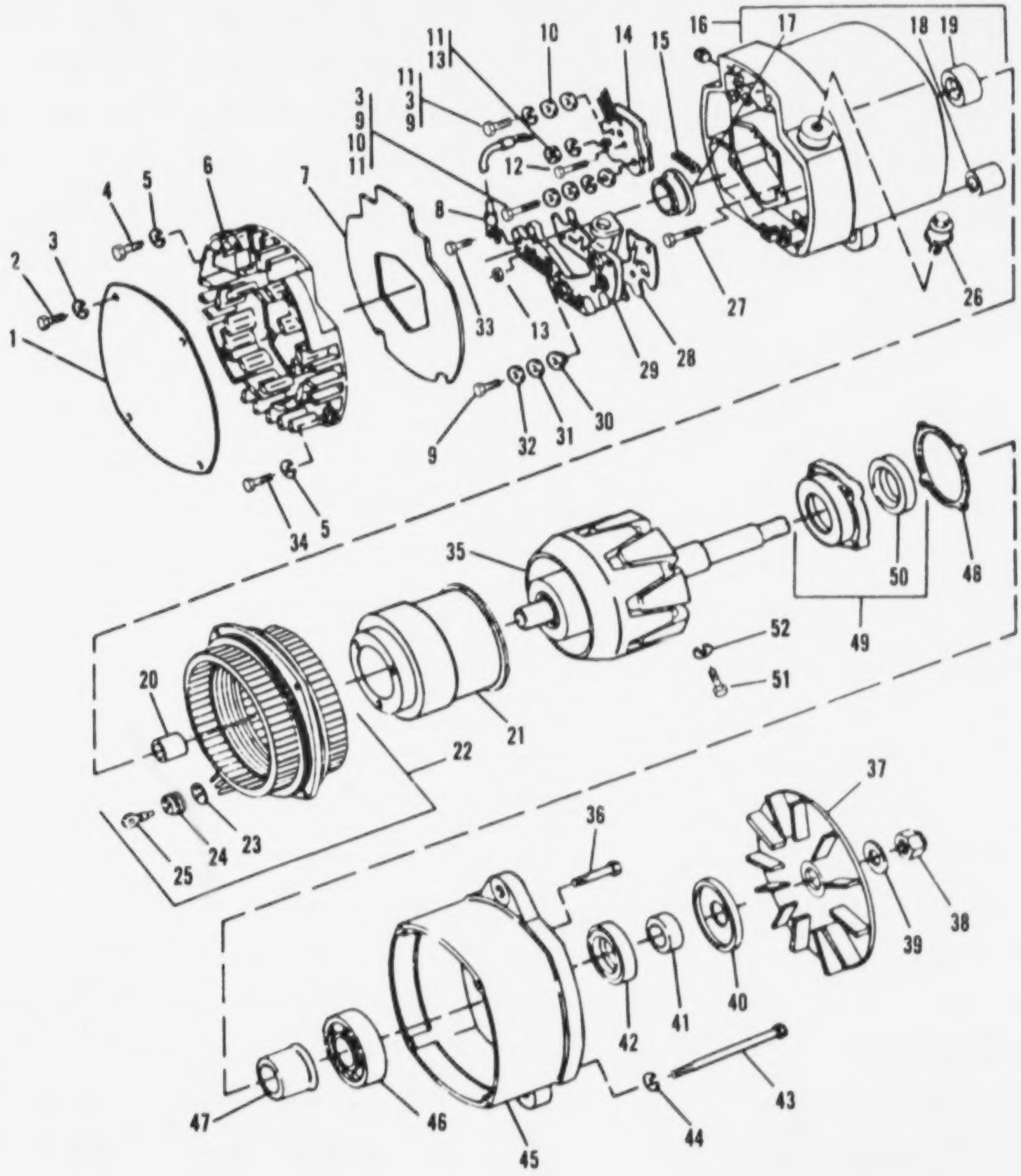

FIGURE 69. ALTERNATOR ASSEMBLY

GROUP 06C1: ALTERNATOR

FIG. 69 ALTERNATOR ASSEMBLY

(1) ITEM NO	(2) SMR CODE	(3) CAGEC	(4) PART NUMBER	(5) DESCRIPTION AND USABLE ON CODES (UOC)	(6) QTY
1	PAFZZ	16764	1969C01	PLATE UOC:V53	1
2	XDFZZ	11083	9S2544	SCREW UOC:V53	4
3	PAFZZ	11083	8HC878	WASHER,LOCK UOC:V53	6
4	PAFZZ	11083	9S2438	SCREW UOC:V53	2
5	PAFZZ	11083	7H2079	WASHER, LOCK	7
6	PAFZZ	16764	1969C00	COVER UOC:V53	1
7	PAFZZ	16764	1970395	GASKET UOC:V53	1
8	PAFZZ	16764	1968588	LEAD,IGNITION,ENGIN UOC:V53	1
9	PAFZZ	11083	9S9830	SCREW UOC:V53	6
10	PAFZZ	11083	8F1326	WASHER,FLAT UOC:V53	7
11	PAFZZ	11083	9B7233	WASHER,LOCK UOC:V53	3
12	PAFZZ	16764	1961570	SCREW UOC:V53	1
13	PAFZZ	24617	103092	NUT,PLAIN,HEXAGON UOC:V53	4
14	XDFZZ	16764	3T1888	REGULATOR ASSY UOC:V53	1
15	PAFZZ	16764	1968596	GROMMET,NONMETALLIC UOC:V53	1
16	PAFZZ	16764	1892960	HOUSING,ELECTRICAL UOC:V53	1
17	PAFZZ	16764	1876813	.CAP-PLUG,PROTECTIVE UOC:V53	1
18	PAFZZ	16764	1968590	.BUSHING,SLEEVE UOC:V53	1
19	PAFZZ	11083	5P3418	.BEARING,ROLLER,NEED UOC:V53	1
20	PAFZZ	11083	5P3419	RING,BEARING,INNER UOC:V53	1
21	XAFZZ	11674	1969133	FIELD COIL & SUPPOR UOC:V53	1
22	XDFFF	11674	1971465	STATOR ASSY UOC:V53	1
23	XDFZZ	11674	1968901	.INSULATOR ASSY UOC:V53	1
24	XDFZZ	11674	1968900	.GROMMET UOC:V53	1
25	XDFZZ	11674	1969671	.CLIP	3

(1) ITEM NO	(2) SMR CODE	(3) CAGEC	(4) PART NUMBER	(5) DESCRIPTION AND USABLE ON CODES(UOC)	(6) QTY
				UOC:V53	
26	PAFZZ	16764	1969002	STUD..................................	1
				UOC:V53	
27	PAFZZ	11083	9S2007	SCREW,SELF-LOCKING................	3
				UOC:V53	
28	PAFZZ	16764	1968930	INSULATOR,PLATE....................	1
				UOC:V53	
29	PAFZZ	16764	1971670	PARTS KIT,ENGINE GE................	1
				UOC:V53	
30	PAFZZ	16764	1959389	INSULATOR,BUSHING..................	4
				UOC:V53	
31	PAFZZ	11083	9S2247	WASHER,SPRING TENSI................	4
				UOC:V53	
32	PAFZZ	11083	4B4863	WASHER,FLAT........................	4
				UOC:V53	
33	PAFZZ	11083	9S2542	SCREW..............................	1
				UOC:V53	
34	PAFZZ	11083	9S2437	SCREW..............................	5
				UOC:V53	
35	PAFZZ	16764	1968904	ROTOR,GENERATOR....................	1
				UOC:V53	
36	PFFZZ	11083	9S2008	SCREW,SELF-LOCKING................	4
				UOC:V53	
37	PAFZZ	16764	1969481	IMPELLER,FAN,AXIAL................	1
				UOC:V53	
38	PAFZZ	16764	9418881	NUT,SELF-LOCKING,HE................	1
				UOC:V53	
39	PAFZZ	11083	7F7621	WASHER,FLAT........................	1
				UOC:V53	
40	PAFZZ	16764	1968891	SLINGER............................	1
				UOC:V53	
41	PAFZZ	16764	1968890	COLLAR.............................	1
				UOC:V53	
42	PAFZZ	11083	9S2391	SEAL,PLAIN ENCASED................	1
				UOC:V53	
43	PFFZZ	11083	9S2009	SCREW,SELF-LOCKING................	4
				UOC:V53	
44	PAFZZ	11083	3B4502	WASHER,LOCK........................	4
				UOC:V53	
45	PAFZZ	16764	1852726	FRAME..............................	1
				UOC:V53	
46	PAFZZ	11083	2F5721	BEARING,BALL,ANNULA................	1
				UOC:V53	
47	XDFZZ	11674	1968885	COLLAR.............................	1
				UOC:V53	
48	PAFZZ	11083	9S2256	GASKET.............................	1
				UOC:V53	
49	XDFZZ	11674	1970407	RETAINER ASSY......................	1
				UOC:V53	
50	PAFZZ	11083	9S2391	.SEAL,PLAIN ENCASED................	1
				UOC:V53	
51	PAFZZ	11083	9S2011	SCREW..............................	1

(1) ITEM NO	(2) SMR CODE	(3) CAGEC	(4) PART NUMBER	(5) DESCRIPTION AND USABLE ON CODES(UOC)	(6) QTY
				UOC:V53	
52	XDFZZ	83355	1-4INNVYLKWASH	WASHER,LOCK......................... UOC:V53	1

END OF FIGURE

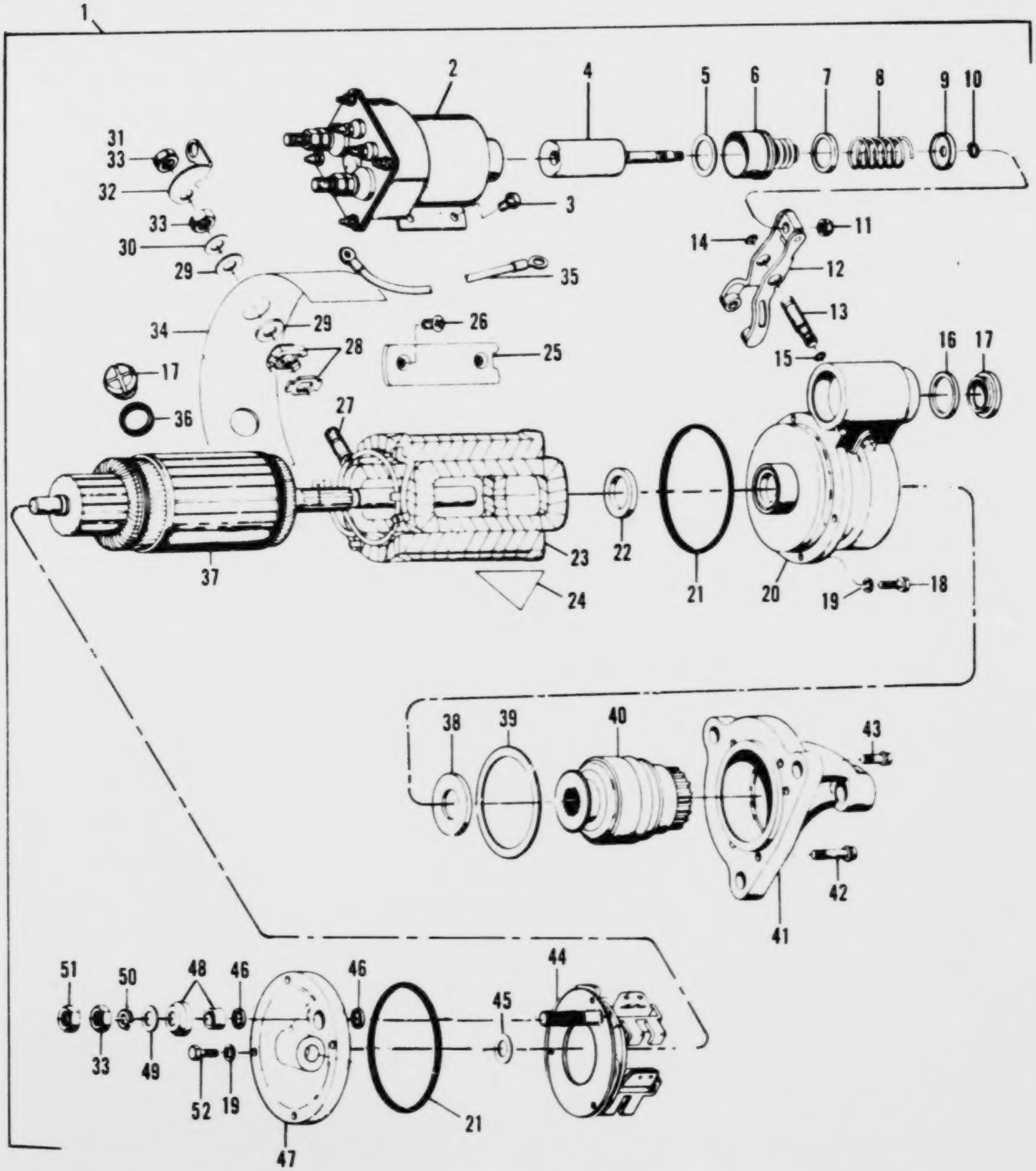

FIGURE 70. ELECTRIC STARTING MOTOR

(1) ITEM NO	(2) SMR CODE	(3) CAGEC	(4) PART NUMBER	(5) DESCRIPTION AND USABLE ON CODES(UOC)	(6) QTY
				GROUP 0603: STARTING MOTOR	
				FIG. 70 ELECTRIC STARTING MOTOR	
1	PAFZZ	11674	1990272	STARTER MOTOR........................	1
2	PAFZZ	16764	1115563	.RELAY,ELECTROMAGNET................ UOC:V53	1
3	PAHZZ	16764	1930611	.BOLT,MACHINE........................	4
4	XBHZZ	16764	1948522	.PLUNGER,SOLENOID.................... UOC:V53	1
5	PAHZZ	16764	1948519	.WASHER,FLAT......................... UOC:V53	1
6	PFHZZ	16764	801077	.BELLOWS,PROTECTION.................. UOC:V53	1
7	PAHZZ	16764	1948520	.WASHER,RECESSED..................... UOC:V53	1
8	PAHZZ	16764	1948521	.SPRING,HELICAL,COMP................. UOC:V53	1
9	PAHZZ	16764	1948526	.WASHER,RECESSED..................... UOC:V53	1
10	PAHZZ	16764	9415235	.RING,RETAINING...................... UOC:V53	2
11	PAHZZ	16764	9412305	.NUT,SELF-LOCKING,HE................. UOC:V53	1
12	PAHZZ	16764	1945484	.LEVER ASSEMBLY...................... UOC:V53	1
13	XBHZZ	16764	1948529	.SHAFT,SHOULDERED.................... UOC:V53	1
14	PAHZZ	16764	1894643	.PACKING,PREFORMED...................	1
15	PAFZZ	16764	1894642	PACKING,PREFORMED.................... UOC:V53	1
16	PAHZZ	16764	1933111	.GASKET.............................. UOC:V53	2
17	XBHZZ	16764	1945356	.PLUG,MACHINE THREAD................. UOC:V53	8
18	PAHZZ	16764	1914869	.BOLT,MACHINE........................ UOC:V53	6
19	PAHZZ	16764	9121427	.WASHER,LOCK.........................	12
20	PAHZZ	16764	1979870	.HOUSING,LEVER.......................	1
21	PAHZZ	16764	1945860	.PACKING,PREFORMED................... UOC:V53	2
22	PAHZZ	16764	1936466	.WASHER.............................. UOC:V53	1
23	PAFZZ	16764	1945853	.WINDING,MOTOR FIELD................. UOC:V53	6
24	XBHZZ	16764	1914873	.PLATE,INSULATION.................... UOC:V53	1
25	XBHZZ	16764	1869747	.POLE SHOE,STARTER................... UOC:V53	6
26	PAHZZ	16764	1964294	.SCREW,MACHINE.......................	12
27	PAHZZ	16764	1950561	.TERMINAL............................	1
28	PAHZZ	16764	1965472	.INSULATOR,BUSHING...................	1

(1) ITEM NO	(2) SMR CODE	(3) CAGEC	(4) PART NUMBER	(5) DESCRIPTION AND USABLE ON CODES(UOC)	(6) QTY
				UOC:V53	
29	PAHZZ	16764	1922457	.WASHER,FLAT............................ UOC:V53	2
30	PAHZZ	88044	AN960-816L	.WASHER,FLAT............................ UOC:V53	1
31	PAHZZ	02978	ERNA245	.WASHER,LOCK............................ UOC:V53	2
32	PAFZZ	16764	1953238	.BRACKET,ELECTRICAL..................... UOC:V53	1
33	PAFZZ	16764	1979451	.NUT,PLAIN,EXTENDED..................... UOC:V53	2
34	XBHZZ	16764	1955989	.INSULATOR,PLATE........................ UOC:V53	1
35	PAFZZ	16764	1979600	LEAD ASSEMBLY,ELECT..................... UOC:V53	1
36	PAHZZ	16764	1964857	.GASKET................................. UOC:V53	1
37	PAHZZ	16764	1945840	.ARMATURE,MOTOR.........................	1
38	PAHZZ	16764	1911644	.WASHER,FLAT............................ UOC:V53	1
39	PAHZZ	16764	1945476	.PACKING,PREFORMED...................... UOC:V53	1
40	PAHZZ	16764	1976884	.DRIVE,ENGINE,ELECTR....................	1
41	PAFFF	16764	1957846	STARTER HOUSING,ENG..................... UOC:V53	1
42	PAHZZ	16764	1948536	.BOLT,INTERNAL WRENC.................... UOC:V53	3
43	PAHZZ	16764	1948537	.BOLT,INTERNAL WRENC.................... UOC:V53	3
44	PAHZZ	16764	1985066	.BRUSH PLATE ASSEMBL....................	1
45	PAHZZ	16764	1953237	.WASHER,FLAT............................ UOC:V53	1
46	PAHZZ	16764	1861791	.WASHER,FLAT............................	2
47	PAHZZ	16764	1945848	.STARTER,HOUSING........................	1
48	PAHZZ	16764	1851632	.PARTS KIT,ELECTRICA.................... UOC:V53	1
49	PAHZZ	88044	AN960-816L	.WASHER,FLAT............................ UOC:V53	2
50	PAHZZ	02978	ERNA245	.WASHER,LOCK............................ UOC:V53	1
51	PAHZZ	16764	9441934	.NUT, PLAIN HEX.........................	1
52	PAHZZ	16764	1914869	.BOLT,MACHINE...........................	6

END OF FIGURE

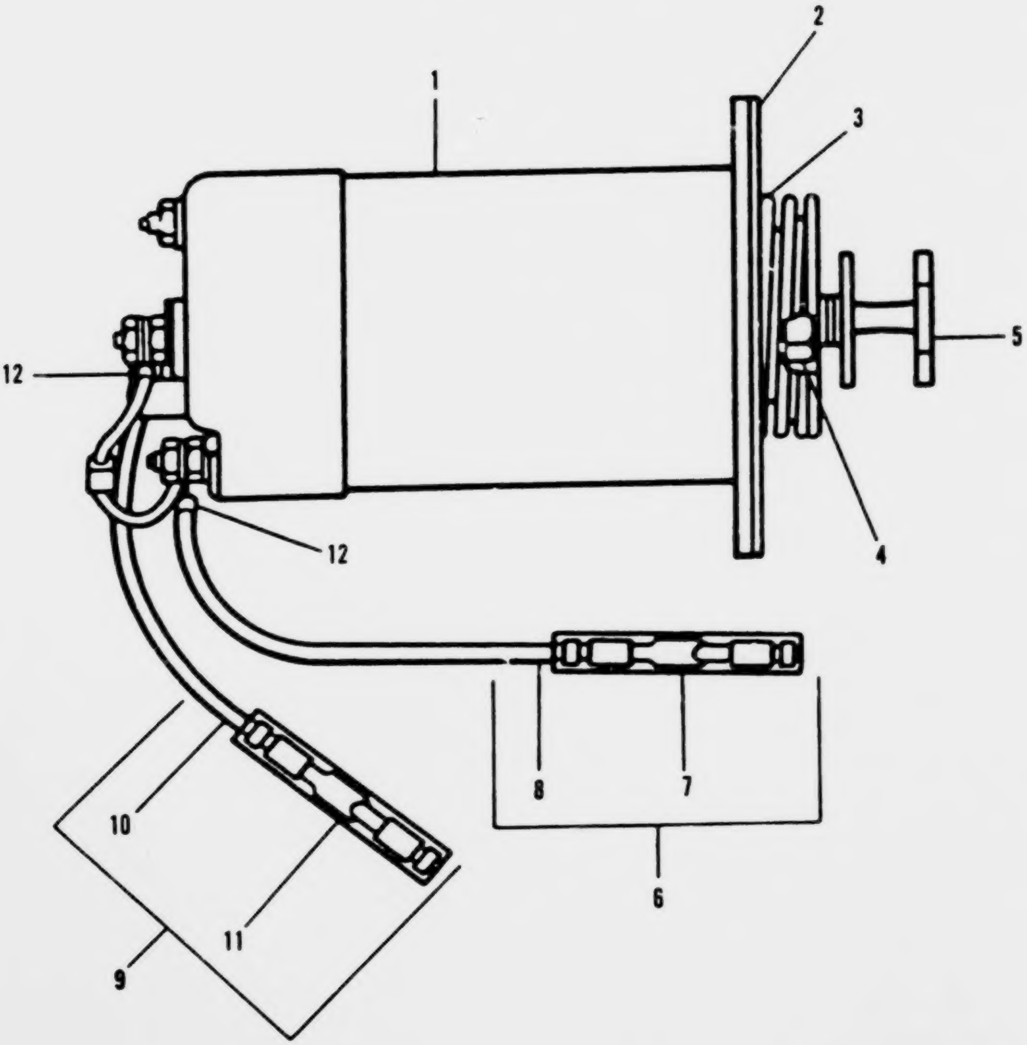

FIGURE 71. ELECTRIC SHUTOFF ASSEMBLY

(1) ITEM NO	(2) SMR CODE	(3) CAGEC	(4) PART NUMBER	(5) DESCRIPTION AND USABLE ON CODES(UOC)	(6) QTY
				GROUP 0606: ENGINE SAFETY CONTROLS	
				FIG. 71 ELECTRIC SHUTOFF ASSEMBLY	
1	PAFZZ	81983	W-1060-2	RELAY-SOLENOID,ENGI.................. UOC:V53	1
2	PAFZZ	11083	8L3873	GASKET PART OF KIT P/N 5R4553....... UOC:V53	1
3	PAFZZ	11083	7N9845	SPRING,HELICAL,COMP................ UOC:V53	1
4	PAFZZ	96906	MS35691-21	NUT,PLAIN,HEXAGON.................. UOC:V53	1
5	PAFZZ	11083	6N4241	BOLT,MACHINE........................ UOC:V53	1
6	PAFZZ	11083	5P4278	CONNECTOR ASSY...................... UOC:V53	1
7	XBFZZ	11083	6K1828	.CONNECTOR,PLUG,ELEC................ UOC:V53	1
8	PAFZZ	11083	6A3626	.WIRE,ELECTRICAL.................... UOC:V53	1
9	MFFFF	11083	5P6725	LEAD ASSEMBLY,ELECT MAKE FROM P/N 5P6725............................... UOC:V53	1
10	PAOZZ	11083	6A3626	.WIRE,ELECTRICAL.................... UOC:V53	1
11	XBFZZ	11083	6K1827	.CONNECTOR,PLUG,ELEC................ UOC:V53	1
12	PAFZZ	96906	MS25036-108	TERMINAL,LUG........................ UOC:V53	2

END OF FIGURE

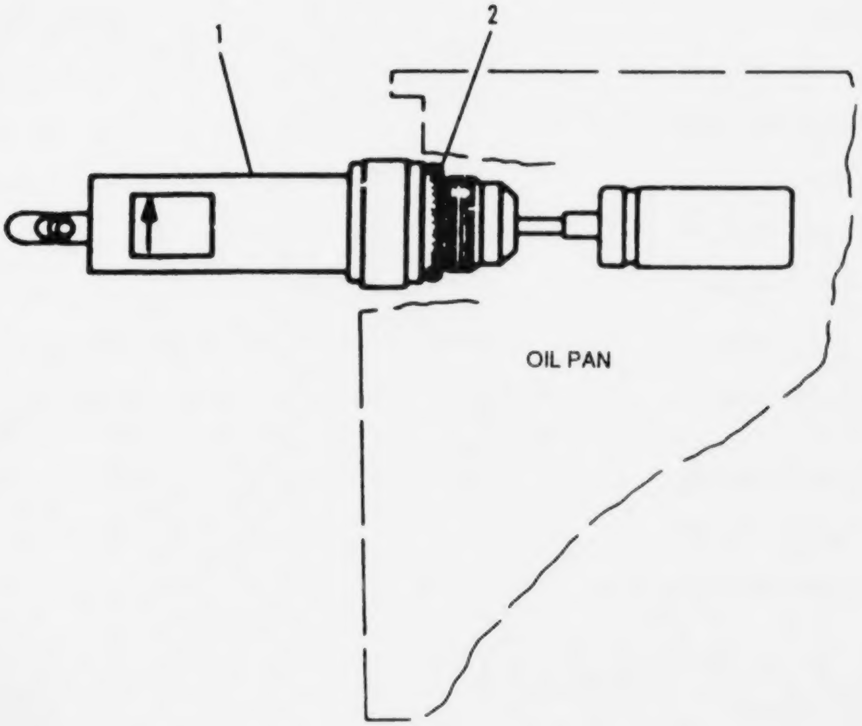

FIGURE 72. OIL LEVEL SWITCH

(1) ITEM NO	(2) SMR CODE	(3) CAGEC	(4) PART NUMBER	(5) DESCRIPTION AND USABLE ON CODES(UOC)	(6) QTY
				GROUP 0606: ENGINE SAFETY CONTROLS	
				FIG. 72 OIL LEVEL SWITCH	
1	PAFZZ	11083	9S4185	PLUG,MACHINE THREAD.................. UOC:V53	1
2	PAFZZ	81349	M83248-2-908	PACKING,PREFORMED PART OF KIT P/N 5R4553............................ UOC:V53	1

END OF FIGURE

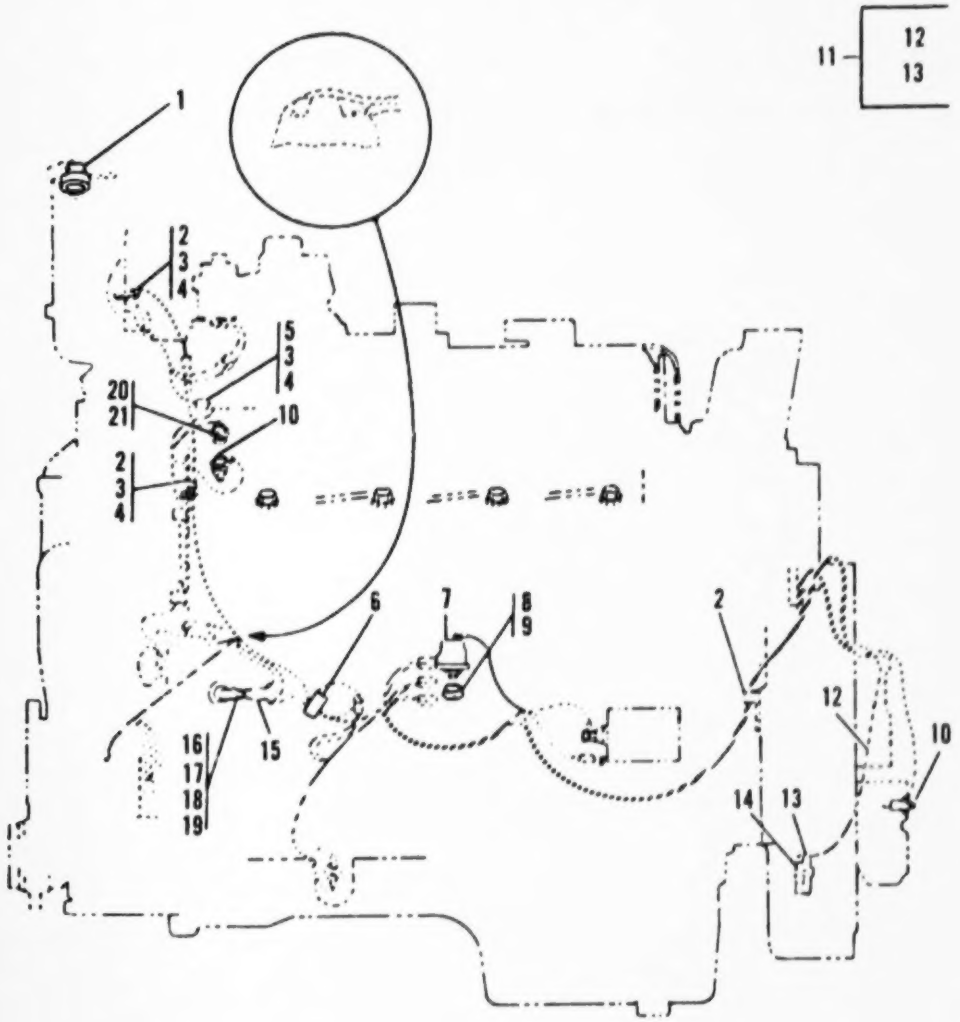

FIGURE 73. ENGINE WIRING ASSEMBLY

GROUP 0606: ENGINE SAFETY CONTROLS

FIG. 73 ENGINE WIRING ASSEMBLY

(1) ITEM NO	(2) SMR CODE	(3) CAGEC	(4) PART NUMBER	(5) DESCRIPTION AND USABLE ON CODES(UOC)	(6) QTY
1	PAOZZ	70040	6464584	TRANSMITTER,PRESSUR.................. UOC:V53	1
2	PAOZZ	11083	8M2770	CLAMP,LOOP........................... UOC:V53	1
3	PAOZZ	96906	MS18154-58	SCREW,CAP,HEXAGON H.................. UOC:V53	3
4	PAOZZ	11083	5M2894	WASHER,FLAT.......................... UOC:V53	4
5	PAOZZ	11083	8M2772	CLAMP,LOOP........................... UOC:V53	5
6	PAOZZ	11083	3S8665	CLAMP,LOOP........................... UOC:V53	1
7	PAOZZ	70040	6464585	TRANSMITTER,PRESSUR.................. UOC:V53	1
8	XDOZZ	11083	38747	ELBOW,90 DEG PIPE.................... UOC:V53	1
9	XDOZZ	17335	5404-6-4	FITTING,REDUCING..................... UOC:V53	1
10	PAOZZ	70040	8992917	TRANSMITTER,TEMPERA.................. UOC:V53	1
11	PFOZZ	11083	5R4562	WIRE ASSY............................ UOC:V53	1
12	PFOZZ	81349	M22759/11-16-0	.WIRE,ELECTRICAL..................... UOC:V53	1
13	PAOZZ	11083	5P1475	.TERMINAL,LUG........................ UOC:V53	2
14	PAOZZ	11083	7D8936	TRANSMITTER,TEMPERA.................. UOC:V53	1
15	PAOZZ	11083	4N4696	SWITCH,PRESSURE...................... UOC:V53	1
16	PAOZZ	11083	4M5317	BUSHING,REDUCER...................... UOC:V53	1
17	PAOZZ	79470	C3409X4	ELBOW,PIPE........................... UOC:V53	1
18	PAOZZ	11083	3P764	PLUG................................. UOC:V53	1
19	PAOZZ	81349	M83248/2-910	PACKING,PREFORMED PART OF KIT P/N 5R4553............................ UOC:V53	1
20	PAOZZ	11083	6N5899	SWITCH,THERMOSTATIC.................. UOC:V53	1
21	PAOZZ	11083	3B7255	BUSHING,PIPE......................... UOC:V53	1

END OF FIGURE

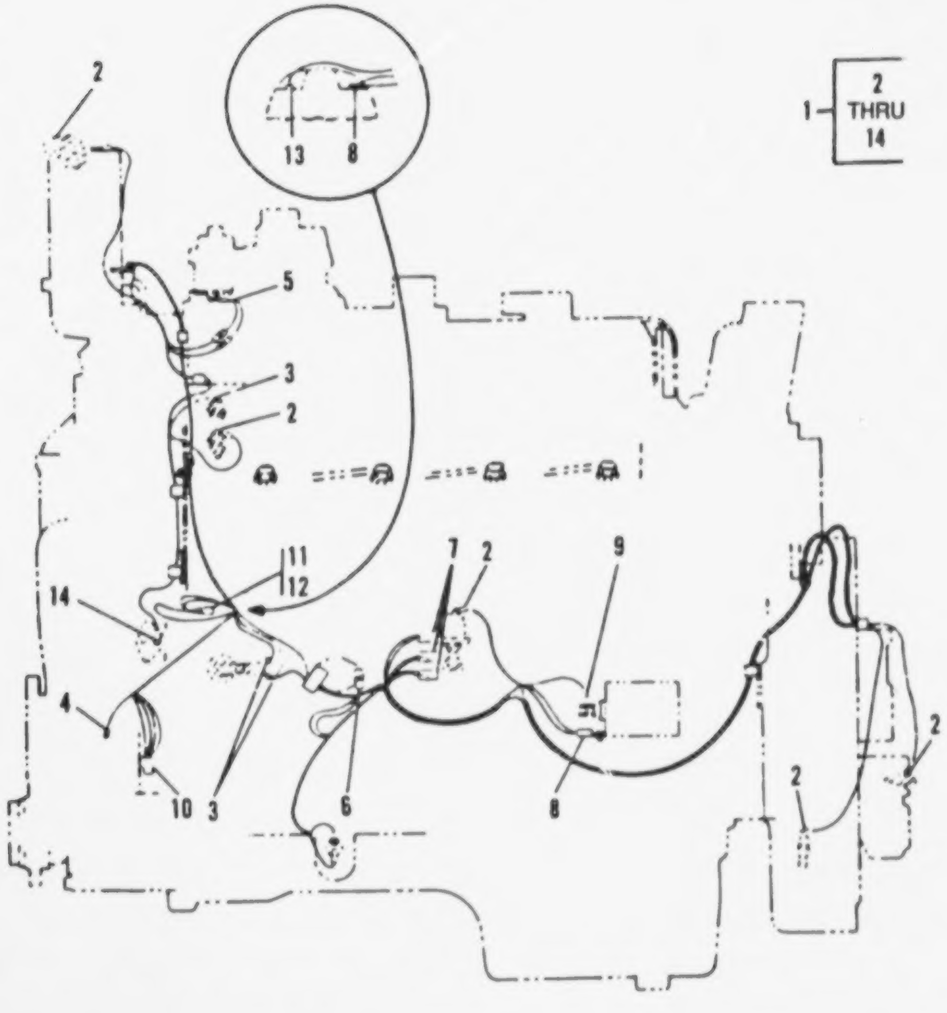

FIGURE 74. ENGINE WIRING HARNESS ASSEMBLY

(1) ITEM NO	(2) SMR CODE	(3) CAGEC	(4) PART NUMBER	(5) DESCRIPTION AND USABLE ON CODES(UOC)	(6) QTY
				GROUP 0606: ENGINE SAFETY CONTROLS	
				FIG. 74 ENGINE WIRING HARNESS ASSEMBLY	
1	XDFOO	11083	5R4570	HARNESS ASSY........................... UOC:V53	1
2	PAOZZ	00779	53245-1	.TERMINAL,LUG.......................... UOC:V53	7
3	PAOZZ	11083	5P1475	.TERMINAL,LUG.......................... UOC:V53	5
4	PAOZZ	11083	6N5587	.TERMINAL,QUICK DISC................ UOC:V53	2
5	PAOZZ	79550	2863	.TERMINAL,QUICK DISC................ UOC:V53	1
6	PAOZZ	96906	MS25036-114	.TERMINAL,LUG.......................... UOC:V53	1
7	PAOZZ	11083	5P3160	.CONNECTOR,PLUG,ELEC............... UOC:V53	3
8	PAOZZ	11083	2L8054	.TERMINAL,LUG.......................... UOC:V53	2
9	PFOZZ	00779	32975	.TERMINAL,LUG.......................... UOC:V53	1
10	PAOZZ	11083	5P3175	.CONNECTOR,PLUG,ELEC............... UOC:V53	1
11	PAOZZ	79550	15784	.RING,RETAINING....................... UOC:V53	1
12	XDOZZ	77060	8900186	.TERMINAL,LUG.......................... UOC:V53	1
13	PFOZZ	11083	9D2828	.TERMINAL,QUICK DISC................ UOC:V53	1
14	PAOZZ	96906	MS25036-110	.TERMINAL,LUG.......................... UOC:V53	1

END OF FIGURE

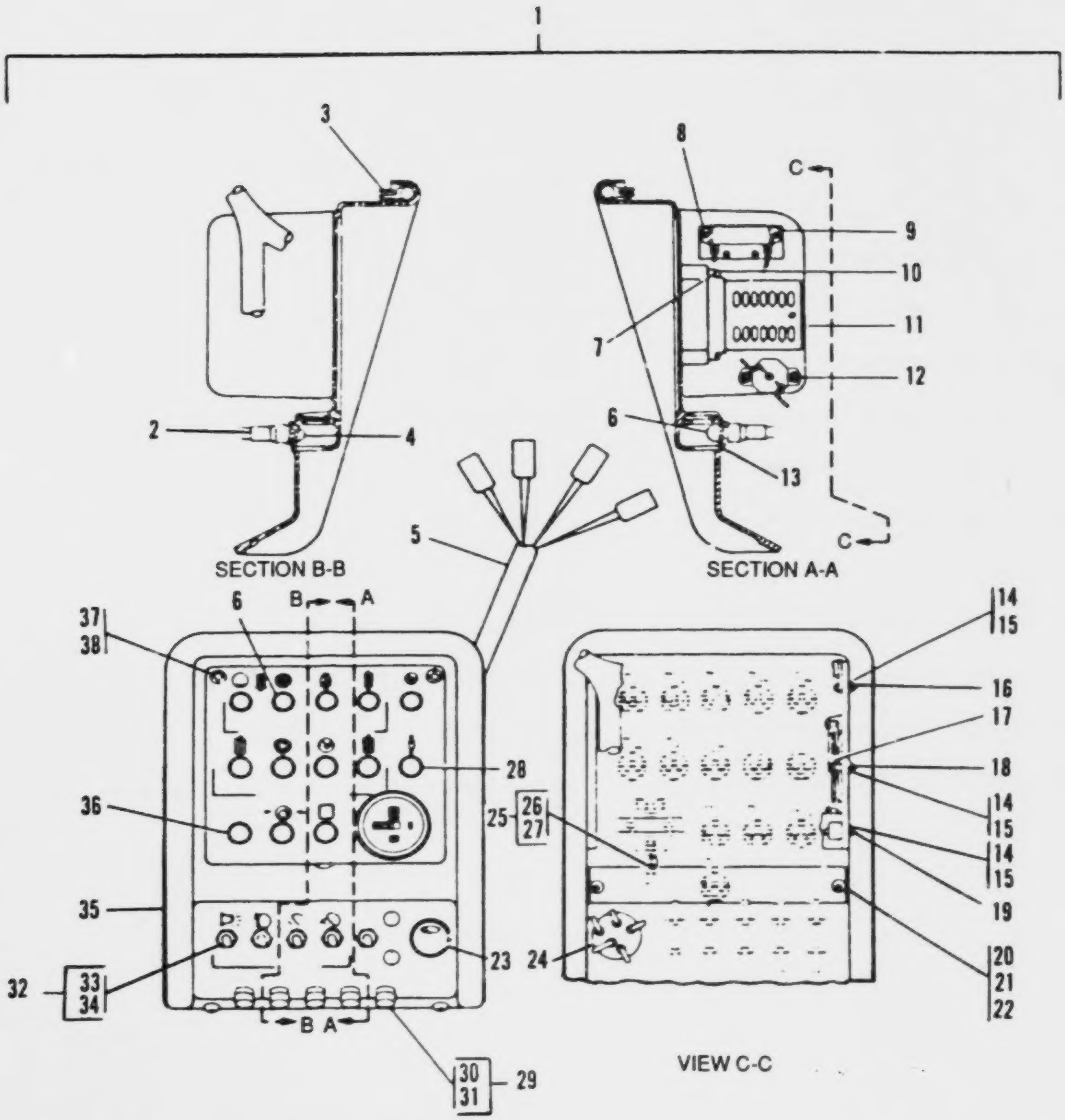

FIGURE 75. LEFT-HAND INSTRUMENT PANEL

(1) ITEM NO	(2) SMR CODE	(3) CAGEC	(4) PART NUMBER	(5) DESCRIPTION AND USABLE ON CODES(UOC)	(6) QTY
				GROUP 0607: INSTRUMENT CONTROL PANEL	
				FIG. 75 LEFT-HAND INSTRUMENT PANEL	
1	XD000	11083	1V4865	PANEL GRP,INSTR.................... UOC:V53	1
2	PAOZZ	72619	81-5710-01-403	.LIGHT,INDICATOR.................... UOC:V53	14
3	XDOZZ	11083	5P5902	.NONMETALLIC SPECIAL.................... UOC:V53	1
4	PAOZZ	11083	7N9967	.LAMP,INCANDESCENT.................... UOC:V53	14
5	PF000	11083	1V8111	.WIRING HARNESS,BRAN.................... UOC:V53	1
6	PAOZZ	72619	52-3192-003	.LENS,LIGHT.................... UOC:V53	2
7	PAOZZ	78189	1206-00	.WASHER,LOCK.................... UOC:V53	2
8	PAOZZ	94988	625	.FLASHER,THERMAL.................... UOC:V53	1
9	XDOZZ	11083	1V7383	.BLOCK,TERM.................... UOC:V53	1
10	PAOZZ	11083	2S6218	.SCREW,MACHINE.................... UOC:V53	2
11	XDOZZ	37086	34-7396	.CIRCUIT ASSY,TEST.................... UOC:V53	1
12	PAOZZ	11083	9M9085	.CIRCUIT BREAKER.................... UOC:V53	1
13	XDOZZ	11083	2V7571	.ANGLE.................... UOC:V53	1
14	PAOZZ	24617	103092	.NUT,PLAIN,HEXAGON.................... UOC:V53	5
15	PAOZZ	11083	9B7233	.WASHER,LOCK.................... UOC:V53	5
16	PAOZZ	11083	4B1222	.SCREW,MACHINE.................... UOC:V53	2
17	XDOZZ	11083	9S4968	.SLEEVE,MINTR.................... UOC:V53	1
18	PAOZZ	11083	5M6668	.SCREW,MACHINE.................... UOC:V53	1
19	PAOZZ	11083	3D9779	.PIN,STRAIGHT HEADED.................... UOC:V53	2
20	XDOZZ	11083	4B4274	.WASHER,FLAT.................... UOC:V53	2
21	PAOZZ	96906	MS35335-32	.WASHER,LOCK.................... UOC:V53	2
22	XDOZZ	11083	6H5430	.SCREW,MACHINE.................... UOC:V53	2
23	PAOZZ	11083	1V7362	.SWITCH,ROTARY.................... UOC:V53	1
24	XBOZZ	11083	7N4033	.KNOB.................... UOC:V53	1

(1) ITEM NO	(2) SMR CODE	(3) CAGEC	(4) PART NUMBER	(5) DESCRIPTION AND USABLE ON CODES(UOC)	(6) QTY
25	PFCZZ	11C83	9W1491	.METER KIT........................... UOC:V53	1
26	PAFZZ	11C83	4S1988	..TERMINAL........................... UOC:V53	1
27	PAOZZ	11083	5P4571	..TERMINAL,QUICK DISC............... UOC:V53	1
28	PAOZZ	72619	52-3192-003	.LENS,LIGHT.......................... UOC:V53	9
29	PAOZZ	71400	HKP-LW-HH	.FUSEHOLDER,EXTRACTO................. UOC:V53	5
30	PAOZZ	81349	F02A32V15A	..FUSE,CARTRIDGE..................... UOC:V53	5
31	XDOZZ	71607	9784-112	..CAP................................ UOC:V53	1
32	PAOZZ	96906	MS24523-22	.SWITCH,TOGGLE....................... UOC:V53	5
33	PAOZZ	11C83	7N8000	..SWITCH,TOGGLE...................... UOC:V53	1
34	XDOZZ	14726	H116	..TERMINAL........................... UOC:V53	2
35	XDOZZ	11C83	2V6767	.BEZEL............................... UOC:V53	1
36	PFOZZ	72619	52-3191-003	.LENS,LIGHT.......................... UOC:V53	3
37	PAOZZ	11083	4S4465	.SCREW,MACHINE....................... UOC:V53	4
38	XDOZZ	11C83	1H3244	.LOCKWASHER.......................... UOC:V53	4

END OF FIGURE

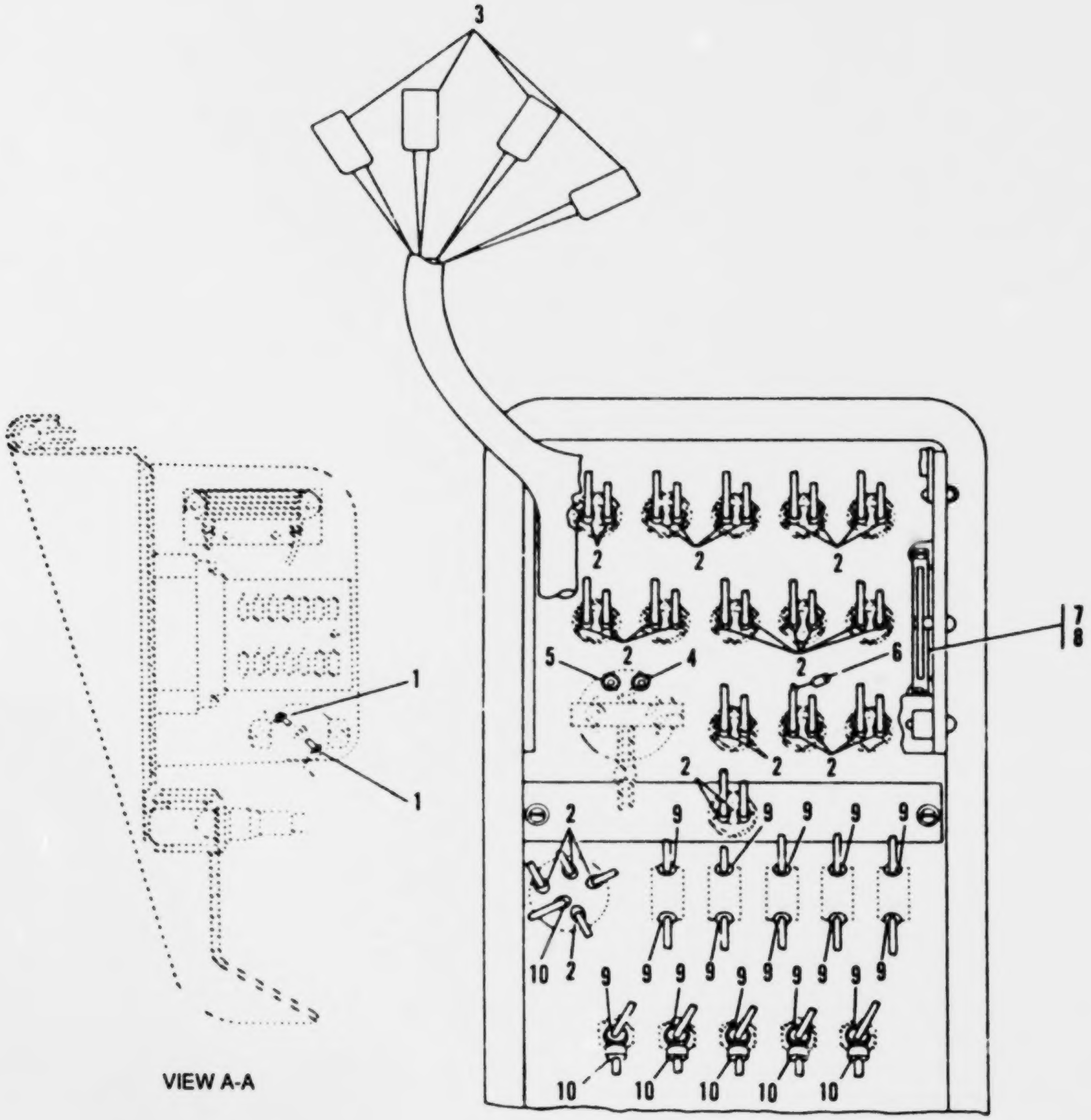

FIGURE 76. LEFT-HAND INSTRUMENT PANEL WIRING HARNESS

(1) ITEM NO	(2) SMR CODE	(3) CAGEC	(4) PART NUMBER	(5) DESCRIPTION AND USABLE ON CODES(UOC)	(6) QTY
				GROUP 06C7: INSTRUMENT CONTROL PANEL	
				FIG. 76 LEFT-HAND INSTRUMENT PANEL WIRING HARNESS	
1	PAOZZ	11083	5P1475	TERMINAL,LUG........................... UOC:V53	4
2	PFOZZ	79550	412026	TERMINAL,QUICK DISC.................... UOC:V53	21
3	PAOZZ	79550	19189C	CONNECTOR,PLUG,ELEC.................... UOC:V53	4
4	PAOZZ	11083	5P4571	TERMINAL,QUICK DISC.................... UOC:V53	1
5	PAOZZ	11083	5P5694	TERMINAL............................... UOC:V53	1
6	XDOZZ	44655	995-58-180	RESISTOR............................... UOC:V53	1
7	PAOZZ	00779	583362-3	CONTACT,ELECTRICAL..................... UOC:V53	15
8	XDOZZ	00779	583301-1	CONNECTOR.............................. UOC:V53	1
9	PAOZZ	11083	4L3916	TERMINAL,QUICK DISC.................... UOC:V53	15
10	PAOZZ	97403	13216E6191-3	TERMINAL,QUICK DISC.................... UOC:V53	7

END OF FIGURE

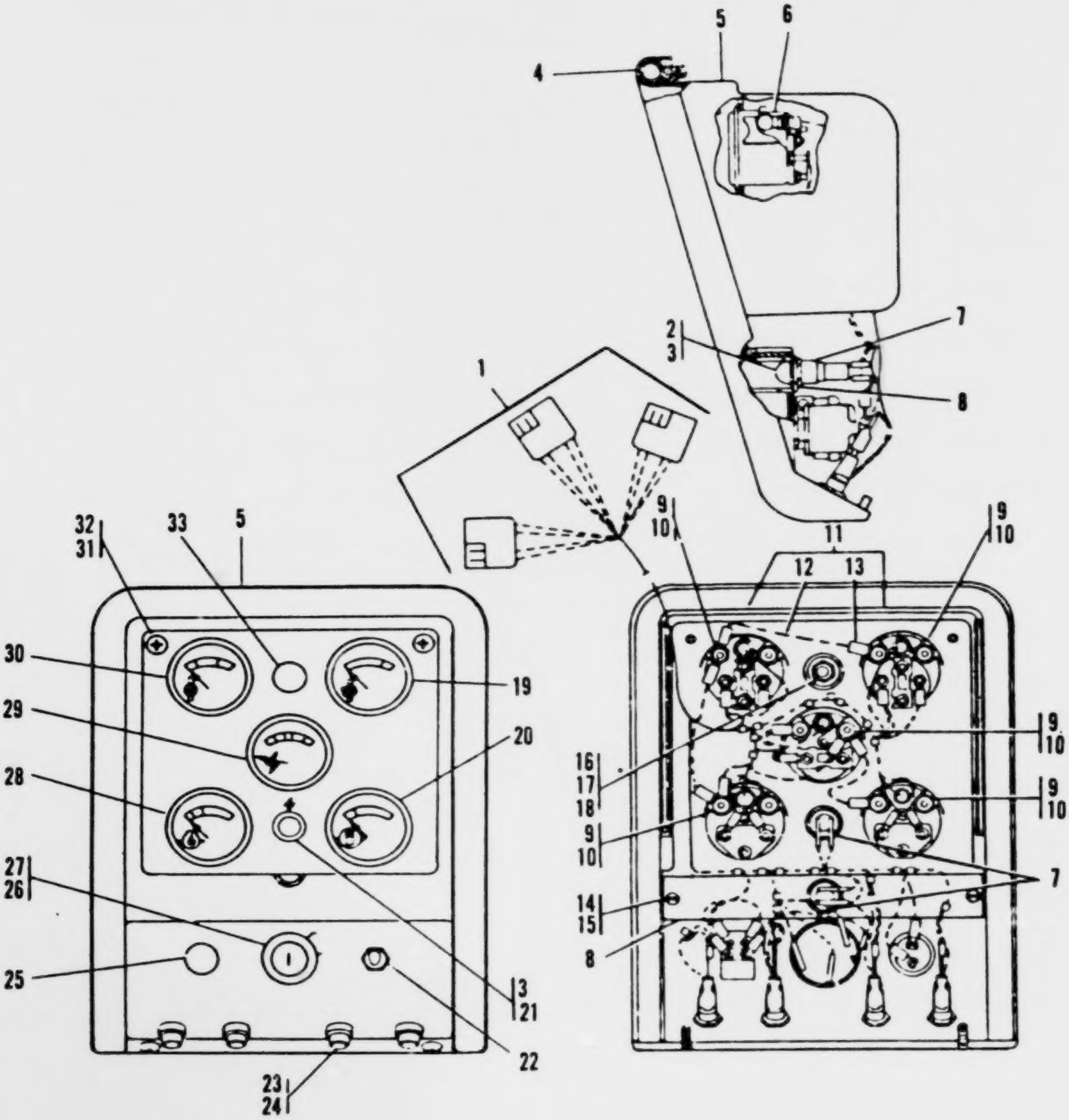

FIGURE 77. RIGHT-HAND INSTRUMENT PANEL

(1) ITEM NO	(2) SMR CODE	(3) CAGEC	(4) PART NUMBER	(5) DESCRIPTION AND USABLE ON CODES(UOC)	(6) QTY
				GROUP 0607: INSTRUMENT CONTROL PANEL	
				FIG. 77 RIGHT-HAND INSTRUMENT PANEL	
1	XDOOO	11083	5R4558	HARNESS ASSY........................ UOC:V53	1
2	PAOZZ	58854	30122-0	LENS,LIGHT.......................... UOC:V53	1
3	PAOZZ	11083	7N9967	LAMP,INCANDESCENT................... UOC:V53	2
4	XDOZZ	11083	5P59C2	NONMETALLIC SPECIAL................. UOC:V53	1
5	XDOZZ	11083	5V3768	BEZEL............................... UOC:V53	1
6	PAOZZ	96906	MS15573-3	LAMP,INCANDESCENT................... UOC:V53	5
7	PAOZZ	72619	81-5710-01-403	LIGHT,INDICATOR..................... UOC:V53	2
8	XDOZZ	11083	2V7571	ANGLE............................... UOC:V53	1
9	PAOZZ	78189	1206-00	WASHER,LOCK......................... UOC:V53	10
10	PAOZZ	11083	4B2040	NUT,PLAIN,CASTELLAT................. UOC:V53	10
11	MOOOO	11083	330369	WIRE ASSY MAKE FROM WIRE P/N 5P5623 UOC:V53	4
12	XDOZZ	11083	335786	.WIRE,BULK,16 GA.................... UOC:V53	1
13	PAOZZ	96906	MS25036-112	.TERMINAL,LUG....................... UOC:V53	2
14	XDOZZ	11083	6H5430	SCREW,MACHINE....................... UOC:V53	2
15	PAOZZ	96906	MS35335-32	WASHER,LOCK......................... UOC:V53	2
16	PAOZZ	15564	1377A	NUT,PLAIN,HEXAGON................... UOC:V53	1
17	PAOZZ	11083	5P1075	WASHER,SQUARE CONE.................. UOC:V53	1
18	PAOZZ	11083	3K925	WASHER,FLAT......................... UOC:V53	1
19	PAOZZ	70040	8992440	INDICATOR,TEMPERATU................. UOC:V53	1
20	PAOZZ	16476	07350-61	GAGE,PRESSURE,DIAL.................. UOC:V53	1
21	PAOZZ	72619	52-3193-003	LENS,LIGHT.......................... UOC:V53	1
22	PAOZZ	11083	7N8009	SWITCH,TOGGLE....................... UOC:V53	1
23	PAOZZ	71400	HKP-LW-HH	FUSEHOLDER,EXTRACTO................. UOC:V53	4
24	PAOZZ	81349	F02A125V10AS	FUSE,CARTRIDGE...................... UOC:V53	4

(1) ITEM NO	(2) SMR CODE	(3) CAGEC	(4) PART NUMBER	(5) DESCRIPTION AND USABLE ON CODES(UOC)	(6) QTY
25	PAOZZ	11083	3F2371	SWITCH,PUSH........................ UOC:V53	1
26	PAOZZ	13445	556-9105	SWITCH,LOCK,IGNITIC.................. UOC:V53	1
27	PAOZZ	74842	8349(LLII)	.KEY BLANK......................... UOC:V53	2
28	PAOZZ	70040	6464421	GAGE,PRESSURE,DIAL.................. UOC:V53	1
29	XDOZZ	11083	6NC676	VOLTMETER.......................... UOC:V53	1
30	XDOZZ	70040	8992445	INDICATOR,WTR TEMP.................. UOC:V53	1
31	PAOZZ	11083	4S4465	SCREW,MACHINE...................... UOC:V53	4
32	XDOZZ	11083	1H3244	LOCKWASHER......................... UOC:V53	4
33	PAOZZ	11083	3D9718	SWITCH,PUSH........................ UOC:V53	1

END OF FIGURE

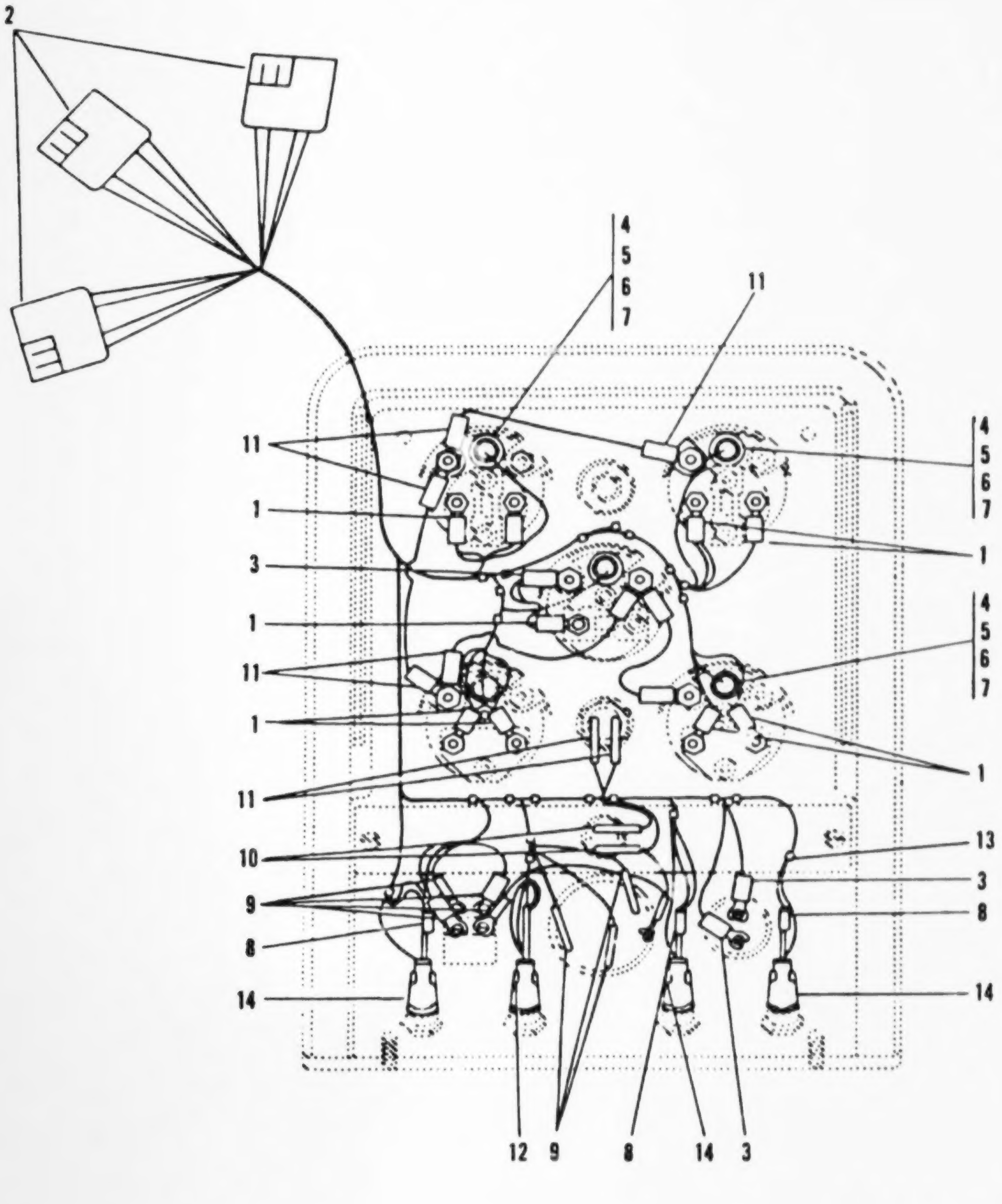

FIGURE 78. RIGHT-HAND INSTRUMENT PANEL WIRING HARNESS

(1) ITEM NO	(2) SMR CODE	(3) CAGEC	(4) PART NUMBER	(5) DESCRIPTION AND USABLE ON CODES(UOC)	(6) QTY
				GROUP 0607: INSTRUMENT CONTROL PANEL	
				FIG. 78 RIGHT-HAND INSTRUMENT PANEL WIRING HARNESS	
1	PAOZZ	59730	RB-2207	TERMINAL,LUG........................ UOC:V53	12
2	XDOZZ	11083	6S7116	CONNECTOR,BULLET.................... UOC:V53	3
3	PAOZZ	98410	B-2195-10X	TERMINAL,LUG........................ UOC:V53	1
4	PAOZZ	77060	2965683	LAMPHOLDER.......................... UOC:V53	5
5	XDOZZ	24617	1860439	SPRING,HELICAL,COMP................. UOC:V53	5
6	PAOZZ	77060	5297062	CONTACT,ELECTRICAL.................. UOC:V53	5
7	PAOZZ	77060	1869794	BUSHING,SLEEVE...................... UOC:V53	5
8	XDOZZ	79550	412171	TERMINAL,QUICK DISC................. UOC:V53	4
9	PAOZZ	11083	5P4571	TERMINAL,QUICK DISC................. UOC:V53	4
10	PAOZZ	11083	5P1475	TERMINAL,LUG........................ UOC:V53	5
11	PFOZZ	79550	412026	TERMINAL,QUICK DISC................. UOC:V53	9
12	PAOZZ	11083	5P1477	TERMINAL,LUG........................ UOC:V53	1
13	PAOZZ	96906	MS3367-5-0	STRAP,TIEDOWN,ELECT................. UOC:V53	23
14	PAOZZ	96906	MS25036-111	TERMINAL,LUG........................ UOC:V53	1

END OF FIGURE

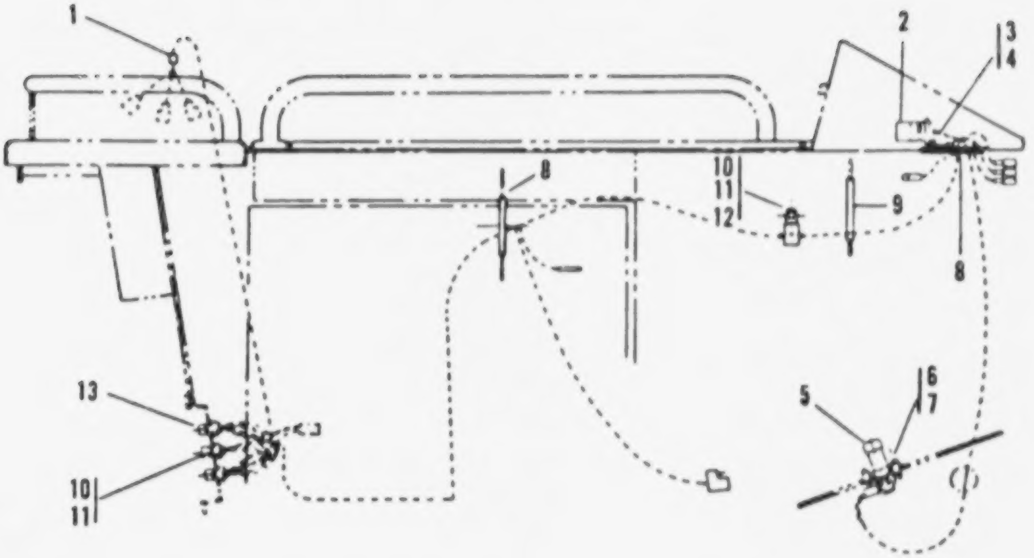

FIGURE 79. CONSOLE WIRING ASSEMBLY

(1) ITEM NO	(2) SMR CODE	(3) CAGEC	(4) PART NUMBER	(5) DESCRIPTION AND USABLE ON CODES(UOC)	(6) QTY
				GROUP 0607: INSTRUMENT CONTROL PANEL	
				FIG. 79 CONSOLE WIRING ASSEMBLY	
1	PBOZZ	75272	COV-0709	HOOK,SUPPORT........................... UOC:V53	1
2	PBOZZ	11083	2V9473	SEMICONDUCTOR DEVIC................. UOC:V53	1
3	XDOZZ	11083	S0163	SCREW,CAP,HEX HD..................... UOC:V53	1
4	XDOZZ	11083	1H3244	LOCKWASHER............................. UOC:V53	1
5	XDOZZ	11083	4K0670	SWITCH,FOOT............................ UOC:V53	1
6	PFOZZ	11083	7H1246	SCREW,MACHINE......................... UOC:V53	2
7	PAOZZ	11083	7F9223	WASHER,LOCK........................... UOC:V53	2
8	PAOZZ	11083	8D482	GROMMET,RUBBER....................... UOC:V53	2
9	XDOZZ	11083	5P7086	TRIM,BULK.............................. UOC:V53	1
10	PAOZZ	96906	MS18154-58	SCREW,CAP,HEXAGON H................ UOC:V53	3
11	PAOZZ	96906	MS35338-45	WASHER,LOCK........................... UOC:V53	3
12	PBCZZ	75272	COV-2113	CLAMP,LOOP............................ UOC:V53	1
13	XDOZZ	11083	1V9607	PLATE.................................. UOC:V53	1

END OF FIGURE

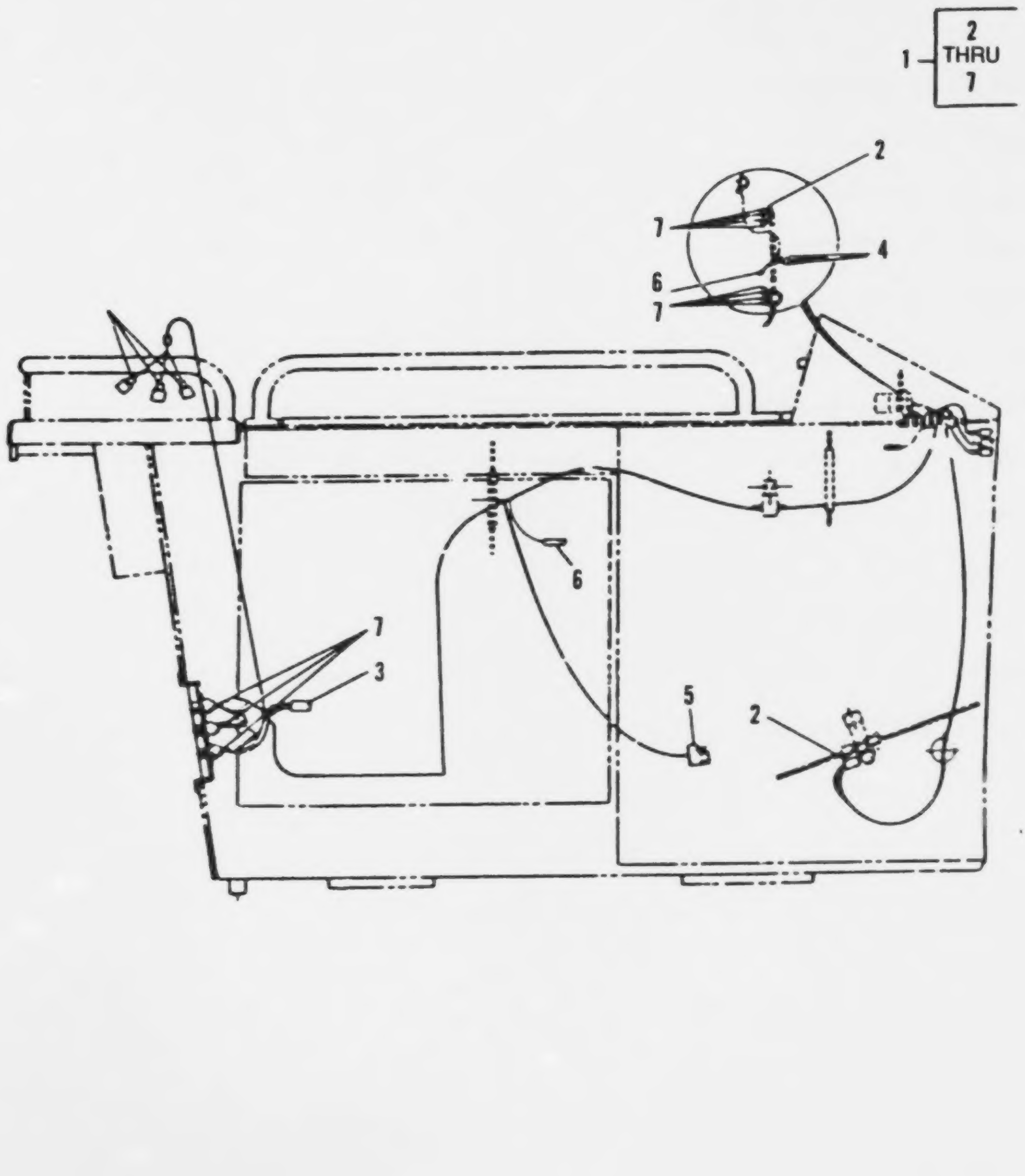

FIGURE 80. CONSOLE WIRING HARNESS ASSEMBLY

(1) ITEM NO	(2) SMR CODE	(3) CAGEC	(4) PART NUMBER	(5) DESCRIPTION AND USABLE ON CODES(UOC)	(6) QTY
				GROUP 0607: INSTRUMENT CONTROL PANEL	
				FIG. 80 CONSOLE WIRING HARNESS ASSEMBLY	
1	XBFFF	11083	5R4552	HARNESS ASSY........................ UOC:V53	1
2	PAOZZ	96906	MS25036-110	.TERMINAL,LUG....................... UOC:V53	3
3	XDOZZ	11083	8K8009	.CONNECTOR.......................... UOC:V53	1
4	PAOZZ	11083	7K4474	.TERMINAL,QUICK DISC................ UOC:V53	1
5	PAOZZ	11083	5P3175	.CONNECTOR,PLUG,ELEC................ UOC:V53	1
6	PAOZZ	11083	6N9587	.TERMINAL,QUICK DISC................ UOC:V53	3
7	PAOZZ	79550	16274	.CONNECTOR,RECEPTACL................ UOC:V53	13

END OF FIGURE

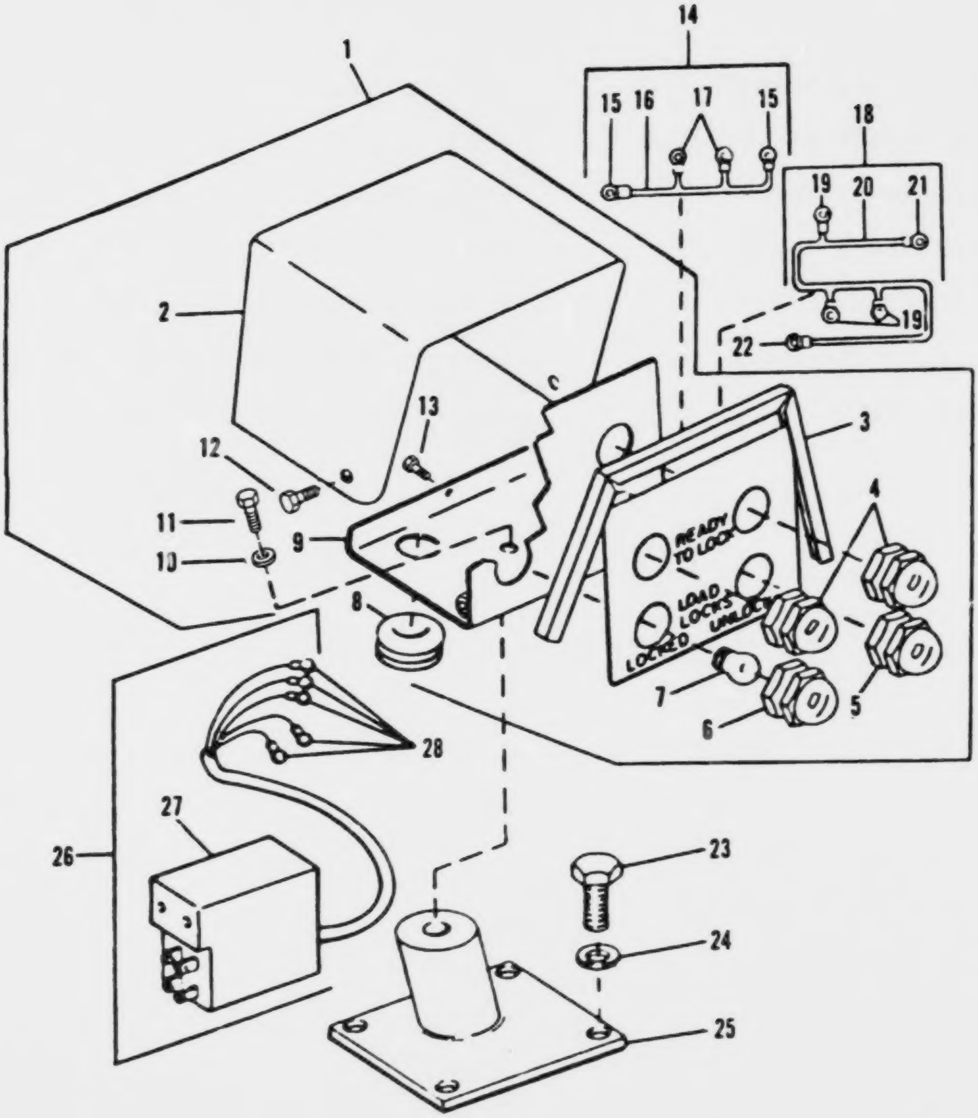

FIGURE 81. CONTAINER LOCK INDICATOR PANEL

(1) ITEM NO	(2) SMR CODE	(3) CAGEC	(4) PART NUMBER	(5) DESCRIPTION AND USABLE CN CODES(UOC)	(6) QTY
				GROUP 0607: INSTRUMENT CONTROL PANEL	
				FIG. 81 CONTAINER LOCK INDICATOR PANEL	
1	XDOOO	11083	5R4520	PANEL ASSY........................... UOC:V53	1
2	XDOZZ	73782	671885	.COVER ASSY,CONT LIG................ UOC:V53	1
3	XDOZZ	98933	GCH36	.CHANNEL,RUBBER...................... UOC:V53	1
4	PAOZZ	72619	820-2701-0433-50 2	.INDICATOR,LIGHT..................... UOC:V53	2
5	PAOZZ	72619	820-2701-0431-50 2	.INDICATOR,LIGHT..................... UOC:V53	1
6	XDOZZ	72619	820-2701-0432-50 2	.LIGHT,INDICATOR..................... UOC:V53	1
7	PAOZZ	08805	6S6-24V	.LAMP,INCANDESCENT................... UOC:V53	4
8	PAOZZ	70485	2866	.GROMMET,NONMETALLIC................. UOC:V53	1
9	XDOZZ	73782	671894	.PLATE ASSY,CONT LIG................. UOC:V53	1
10	PAOZZ	11083	5P1075	.WASHER,SQUARE CONE.................. UOC:V53	1
11	PAOZZ	11083	L472	.BOLT,MACHINE........................ UOC:V53	1
12	PAOZZ	11083	2H3738	.BOLT,MACHINE........................ UOC:V53	2
13	PAOZZ	96906	MS90728-3	.SCREW,CAP,HEXAGON H................. UOC:V53	1
14	MOOOO	11083	5R4550	WIRE ASSY MAKE FROM WIRE P/N 5P5623 UOC:V53	1
15	PAOZZ	11083	2L8074	.TERMINAL,LUG........................ UOC:V53	2
16	PFOZZ	81349	M22759/11-16-0	.WIRE,ELECTRICAL..................... UOC:V53	6
17	PAOZZ	96906	MS25036-111	.TERMINAL,LUG........................ UOC:V53	2
18	MOOOO	11083	5R4549	WIRE ASSY MAKE FROM WIRE P/N 5P5623 UOC:V53	1
19	PAOZZ	96906	MS25036-111	.TERMINAL,LUG........................ UOC:V53	3
20	PAOZZ	81349	M22759/11-16-0	.WIRE,ELECTRICAL..................... UOC:V53	1
21	PAOZZ	11083	2L8071	.TERMINAL,LUG........................ UOC:V53	1
22	PAOZZ	11083	2L8074	.TERMINAL,LUG........................ UOC:V53	1
23	PAOZZ	96906	MS90728-5	SCREW,CAP,HEXAGON H.................. UOC:V53	4
24	PAOZZ	78189	WD23875	WASHER,SPRING TENSI..................	4

(1) ITEM NO	(2) SMR CODE	(3) CAGEC	(4) PART NUMBER	(5) DESCRIPTION AND USABLE ON CODES(UOC)	(6) QTY
				UOC:V53	
25	XDOZZ	11083	5R4503	MOUNT ASSY..............................	1
				UOC:V53	
26	MOOOO	11083	5R4551	HARNESS ASSY MAKE FROM WIRE P/N 6A3770..................................	1
				UOC:V53	
27	PAOZZ	79550	19188A	.CONNECTOR,PLUG,ELEC................	1
				UOC:V53	
28	PAOZZ	11083	2L8074	TERMINAL, INSUL RNG..................	5

END OF FIGURE

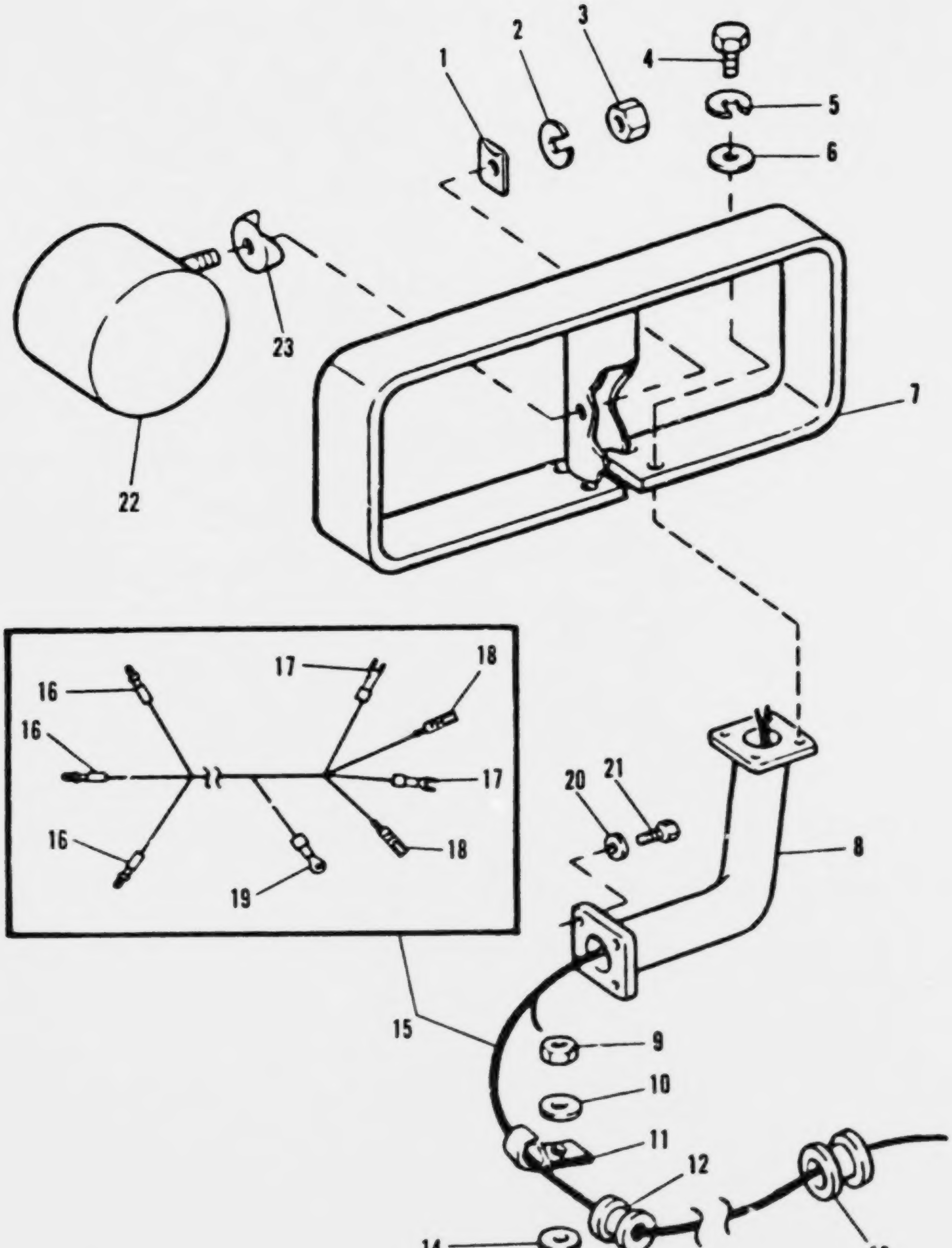

FIGURE 82. HEADLIGHT ASSEMBLY

(1) ITEM NO	(2) SMR CODE	(3) CAGEC	(4) PART NUMBER	(5) DESCRIPTION AND USABLE ON CODES(UOC)	(6) QTY
				GROUP 0609: LIGHTS	
				FIG. 82 HEADLIGHT ASSEMBLY	
1	PFOZZ	11083	6D2256	SPACER............................ UOC:V53	4
2	PAOZZ	11083	5D3184	WASHER,LOCK........................ UOC:V53	4
3	PAOZZ	11083	5D3183	NUT,WHEEL.......................... UOC:V53	4
4	PAOZZ	11083	0L1351	BOLT,MACHINE....................... UOC:V53	4
5	PAOZZ	96906	MS35338-45	WASHER,LOCK........................ UOC:V53	4
6	PFOZZ	11083	4B4278	WASHER,FLAT........................ UOC:V53	4
7	PFOZZ	11083	2V2999	BRACKET,MOUNTING................... UOC:V53	2
8	XDOZZ	11083	2V3001	BRACKET ASSY,RH.................... UOC:V53	1
8	XDOZZ	11083	2V3000	BRACKET ASSY,LH.................... UOC:V53	1
9	PAOZZ	15564	1377A	NUT,PLAIN,HEXAGON.................. UOC:V53	2
10	PAOZZ	11083	4B4279	WASHER,FLAT........................ UOC:V53	2
11	PAOZZ	11083	8M2772	CLAMP,LOOP......................... UOC:V53	2
12	PAOZZ	11083	5P6629	GROMMET,NONMETALLIC................ UOC:V53	2
13	PAOZZ	11083	5P8939	GROMMET,NONMETALLIC................ UOC:V53	2
14	PAOZZ	11083	5M2894	WASHER,FLAT........................ UOC:V53	2
15	MOOOO	11083	2V3020	HARNESS ASSY MAKE FROM WIRE P/N 5P643.............................. UOC:V53	2
16	PAOZZ	79550	11722	.PLUG,TIP.......................... UOC:V53	3
17	PAOZZ	11083	5P1475	.TERMINAL,LUG...................... UOC:V53	2
18	PAOZZ	11083	7K4475	.LEAD,ELECTRICAL................... UOC:V53	2
19	PAOZZ	96906	MS25036-110	.TERMINAL,LUG...................... UOC:V53	1
20	PAOZZ	11083	9N1650	WASHER,FLAT........................ UOC:V53	8
21	PAOZZ	11083	1A2029	BOLT,MACHINE....................... UOC:V53	8
22	PBOZZ	73331	901824	LAMP, INCANDESCENT................. UOC:V53	4
23	PBOZZ	11083	1V1494	SPACER.............................	4

(1) ITEM NO	(2) SMR CODE	(3) CAGEC	(4) PART NUMBER	(5) DESCRIPTION AND USABLE ON CODES(UOC)	(6) QTY
				UOC:V53	

END OF FIGURE

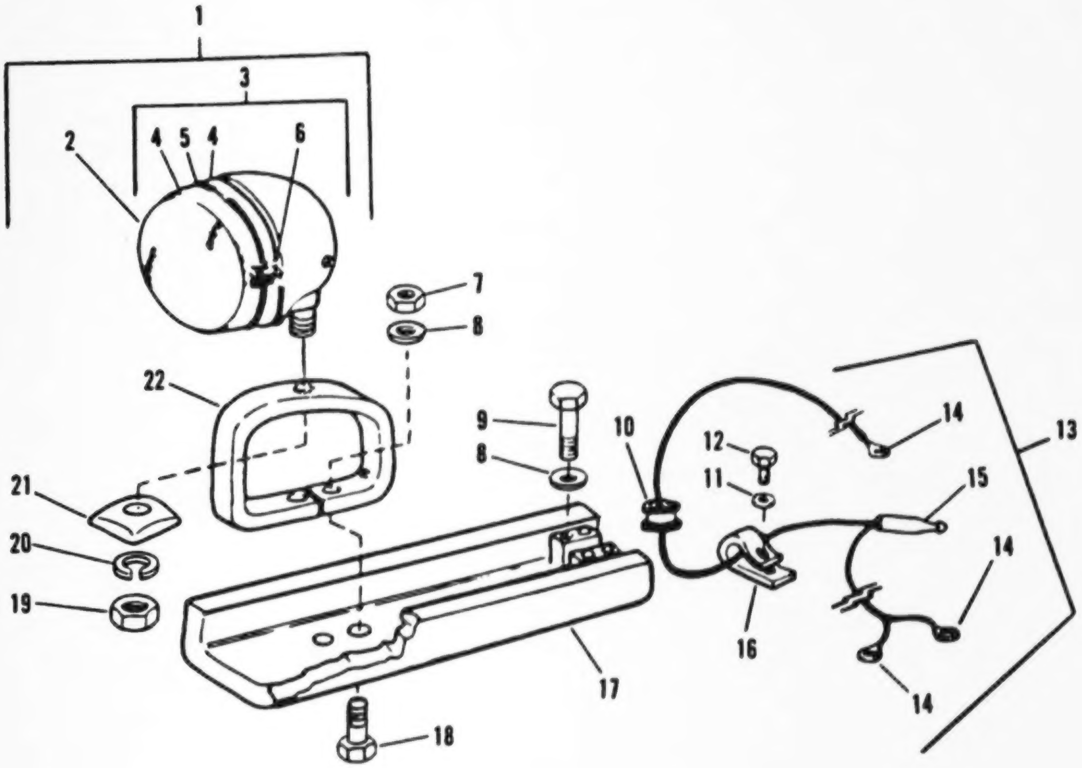

FIGURE 83. AUXILIARY ROPS-MOUNTED LIGHTS

(1) ITEM NO	(2) SMR CODE	(3) CAGEC	(4) PART NUMBER	(5) DESCRIPTION AND USABLE ON CODES (UOC)	(6) QTY
				GROUP 0609: LIGHTS	
				FIG. 83 AUXILIARY ROPS-MOUNTED LIGHTS	
1	PFOZZ	74400	M2875	FLOODLIGHT,ELECTRIC.................. UOC:V53	2
2	PAOZZ	11083	1M5898	.LAMP,INCANDESCENT................ UOC:V53	1
3	XAOZZ	73331	5937085	.HOUSING,LIGHT.................... UOC:V53	1
4	PFOZZ	73331	921472	..RETAINER,LENS................... UOC:V53	2
5	PFOZZ	73331	5949719	..RETAINER,LENS................... UOC:V53	1
6	PAOZZ	11083	5M6668	..SCREW,MACHINE................... UOC:V53	2
7	PAOZZ	15564	1377A	NUT,PLAIN,HEXAGON................. UOC:V53	8
8	PAOZZ	11083	5P1075	WASHER,SQUARE CONE................ UOC:V53	8
9	PAOZZ	11083	0S1591	SCREW............................. UOC:V53	8
10	XDOZZ	11083	3F1688	GROMMET........................... UOC:V53	2
11	PAOZZ	11083	3V3308	WASHER,FLAT....................... UOC:V53	3
12	PAOZZ	96906	MS18154-58	SCREW,CAP,HEXAGON H............... UOC:V53	3
13	MOOOO	11083	5R4450	WIRE ASSY MAKE FROM WIRE P/N 5P4515 UOC:V53	1
14	PAOZZ	96906	MS25036-153	.TERMINAL,LUG..................... UOC:V53	2
15	PAOZZ	79550	2863	.TERMINAL,QUICK DISC.............. UOC:V53	1
16	PAOZZ	75272	COV-0413	CLAMP,LOOP........................ UOC:V53	3
17	XDOZZ	11083	5R4452	BRACKET ASSY...................... UOC:V53	2
18	PAOZZ	11083	1A2029	BOLT,MACHINE...................... UOC:V53	8
19	PAOZZ	11083	5D3183	NUT,WHEEL......................... UOC:V53	2
20	PAOZZ	11083	5D3184	WASHER,LOCK....................... UOC:V53	2
21	PAOZZ	11083	2B8352	WASHER,SPRING TENSI............... UOC:V53	4
22	PFOZZ	11083	1S1888	BRACKET,LAMP...................... UOC:V53	2

END OF FIGURE

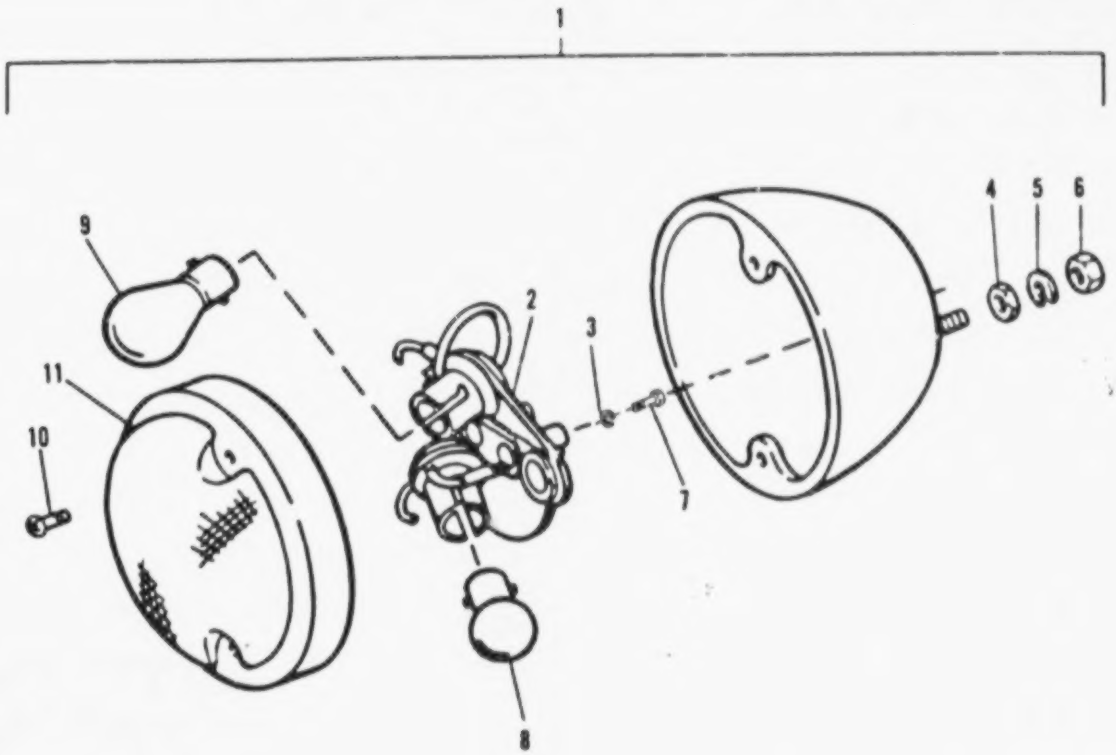

FIGURE 84. STOP AND TAIL LIGHT ASSEMBLY

(1) ITEM NO	(2) SMR CODE	(3) CAGEC	(4) PART NUMBER	(5) DESCRIPTION AND USABLE ON CODES(UOC)	(6) QTY
				GROUP 0609: LIGHTS	
				FIG. 84 STOP AND TAIL LIGHT ASSEMBLY	
1	XDOOO	11C83	7M7147	LAMP ASSY............................ UOC:V53	2
2	PAOZZ	11083	8M1241	.SOCKETS,PLATE..................... UOC:V53	1
3	PAOZZ	96906	MS35338-42	.WASHER,LOCK........................ UOC:V53	2
4	PAOZZ	96906	MS35690-424	.NUT,PLAIN,HEXAGON................ UOC:V53	2
5	PAOZZ	11083	1H3338	.LOCKWASHER......................... UOC:V53	2
6	PAOZZ	96906	MS35690-424	.NUT,PLAIN,HEXAGON................ UOC:V53	2
7	PAOZZ	96906	MS35206-244	.SCREW,MACHINE..................... UOC:V53	2
8	PAOZZ	11083	7H2976	.LAMP,INCANDESCENT................ UOC:V53	1
9	PAOZZ	11083	2D1959	.LAMP,INCANDESCENT................ UOC:V53	1
10	PAOZZ	11083	5M6668	.SCREW,MACHINE..................... UOC:V53	2
11	XDOZZ	11C83	5M8C32	.LENS,LIGHT.......................... UOC:V53	1

END OF FIGURE

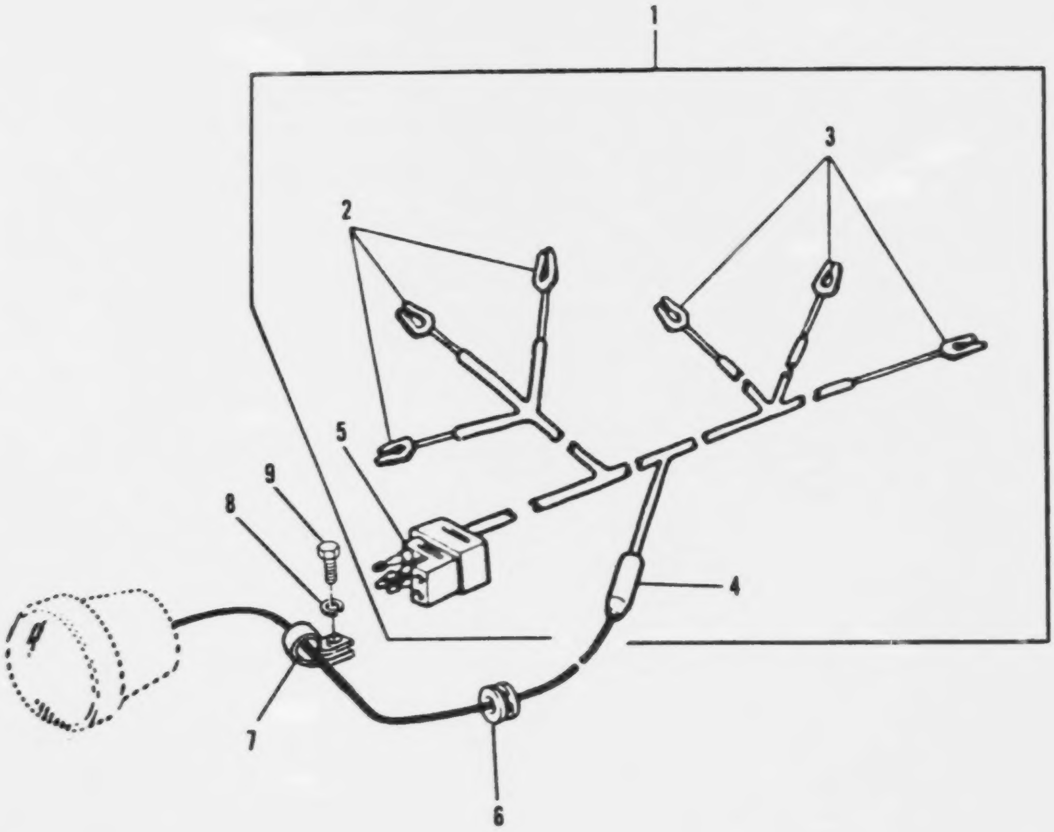

FIGURE 85. REAR LIGHTING GROUP

(1) ITEM NO	(2) SMR CODE	(3) CAGEC	(4) PART NUMBER	(5) DESCRIPTION AND USABLE ON CODES(UOC)	(6) QTY
				GROUP 0609: LIGHTS	
				FIG. 85 REAR LIGHTING GROUP	
1	MOOOO	11083	5V8964	HARNESS ASSY MAKE FROM WIRE P/N 5P4517............................ UOC:V53	1
2	PAOZZ	11083	5P1477	.TERMINAL,LUG.......................... UOC:V53	3
3	PAOZZ	11083	5P1475	.TERMINAL,LUG.......................... UOC:V53	3
4	PAOZZ	79550	17510	.JACK,TIP............................... UOC:V53	1
5	PAOZZ	79550	19188A	.CONNECTOR,PLUG,ELEC................ UOC:V53	1
6	PAOZZ	96906	MS35489-106	GROMMET,NONMETALLIC................ UOC:V53	1
7	PAOZZ	11083	4D8123	CLAMP,LOOP.......................... UOC:V53	4
8	PAOZZ	96906	MS35338-45	WASHER,LOCK......................... UOC:V53	4
9	PAOZZ	96906	MS18154-58	SCREW,CAP,HEXAGON H................. UOC:V53	4

END OF FIGURE

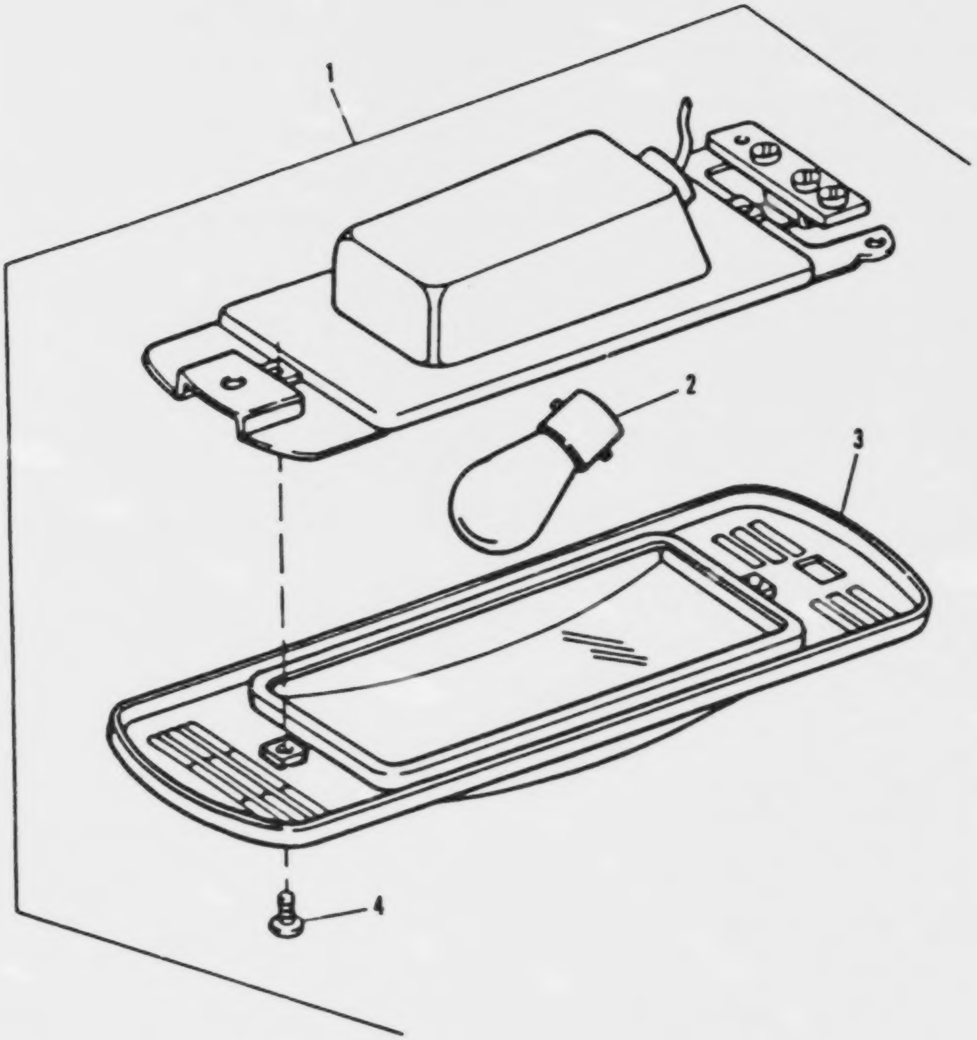

FIGURE 86. CAB DOME LIGHT

(1) ITEM NO	(2) SMR CODE	(3) CAGEC	(4) PART NUMBER	(5) DESCRIPTION AND USABLE ON CODES(UOC)	(6) QTY
				GROUP 0609: LIGHTS	
				FIG. 86 CAB DOME LIGHT	
1	PAOZZ	12662	5854-016	LIGHT,DOME............................ UOC:V53	1
2	PAOZZ	08108	2232	.LAMP,INCANDESCENT.................. UOC:V53	1
3	PAOZZ	81834	01-6103-85	.LIGHT,DOME.......................... UOC:V53	1
4	PAOZZ	96906	MS35206-244	.SCREW,MACHINE...................... UOC:V53	2

END OF FIGURE

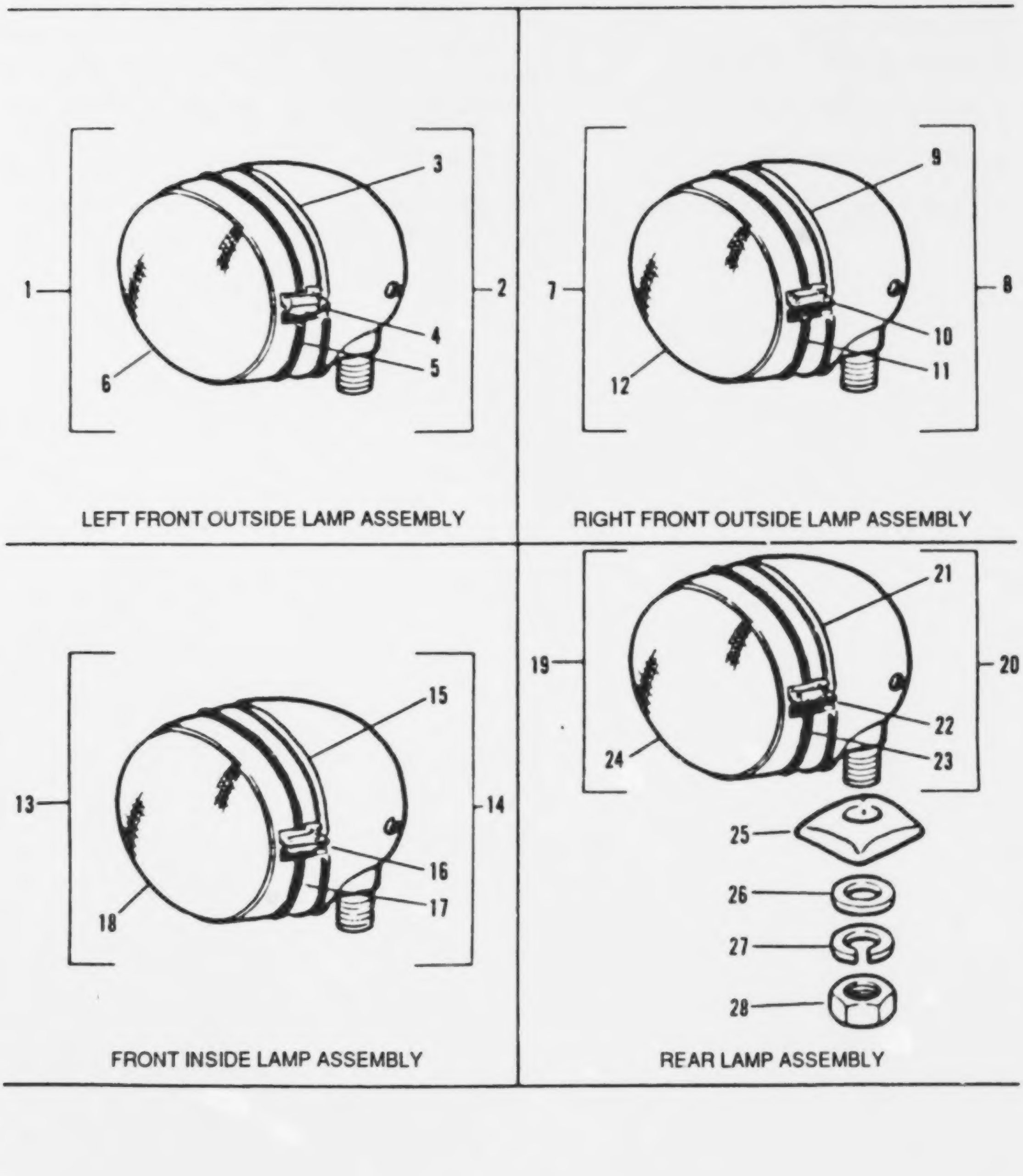

FIGURE 87. LAMP ASSEMBLIES

(1) ITEM NO	(2) SMR CODE	(3) CAGEC	(4) PART NUMBER	(5) DESCRIPTION AND USABLE ON CODES(UOC)	(6) QTY
				GROUP 0609: LIGHTS	
				FIG. 87 LAMP ASSEMBLIES	
1	PAOZZ	73331	910825	LAMP GRP, LH HOR MT.................	1
2	PAOZZ	73331	5937086	.HOUSING,LIGHT...................... UOC:V53	1
3	PBOZZ	73331	921472	..RETAINER,LENS..................... UOC:V53	2
4	PAOZZ	11083	5M6668	..SCREW,MACHINE..................... UOC:V53	2
5	PBOZZ	73331	5949719	..RETAINER,LENS..................... UOC:V53	1
6	PAOZZ	11083	1M5928	.LAMP,INCANDESCENT.................. UOC:V53	1
7	PAOZZ	73331	910826	LAMP GRP, RH HOR MT.................	1
8	PAOZZ	73331	5937086	.HOUSING,LIGHT...................... UOC:V53	1
9	PAOZZ	73331	921472	..RETAINER,LENS..................... UOC:V53	2
10	PAOZZ	11083	5M6668	..SCREW,MACHINE..................... UOC:V53	2
11	PBOZZ	73331	5949719	..RETAINER,LENS..................... UOC:V53	1
12	PAOZZ	11083	1M5928	.LAMP,INCANDESCENT.................. UOC:V53	1
13	PAOZZ	73331	910824	.LAMP,INCANDESCENT.................. UOC:V53	4
14	PAOZZ	73331	5937085	.HOUSING,LIGHT...................... UOC:V53	1
15	PBOZZ	73331	921472	..RETAINER,LENS..................... UOC:V53	2
16	PAOZZ	11083	5M6668	..SCREW,MACHINE..................... UOC:V53	2
17	PBOZZ	73331	5949719	..RETAINER,LENS..................... UOC:V53	1
18	PAOZZ	11083	1M5898	.LAMP,INCANDESCENT.................. UOC:V53	1
19	PFOZZ	74400	M2875	FLOODLIGHT,ELECTRIC................. UOC:V53	2
20	XAOZZ	73331	5937085	.HOUSING,LIGHT...................... UOC:V53	1
21	PFOZZ	73331	921472	..RETAINER,LENS..................... UOC:V53	2
22	PAOZZ	11083	5M6668	..SCREW,MACHINE..................... UOC:V53	2
23	PFOZZ	73331	5949719	..RETAINER,LENS..................... UOC:V53	1
24	PAOZZ	11083	1M5898	.LAMP,INCANDESCENT.................. UOC:V53	1
25	PFOZZ	11083	3D7854	SPACER,NYLON........................ UOC:V53	2

(1) ITEM NO	(2) SMR CODE	(3) CAGEC	(4) PART NUMBER	(5) DESCRIPTION AND USABLE ON CODES(UOC)	(6) QTY
26	PFCZZ	11083	6D2256	SPACER................................ UOC:V53	2
27	PAOZZ	96906	MS35340850	WASHER,LOCK........................... UOC:V53	2
28	PAOZF	96906	MS51968-20	NUT,PLAIN,HEXAGON..................... UOC:V53	2

END OF FIGURE

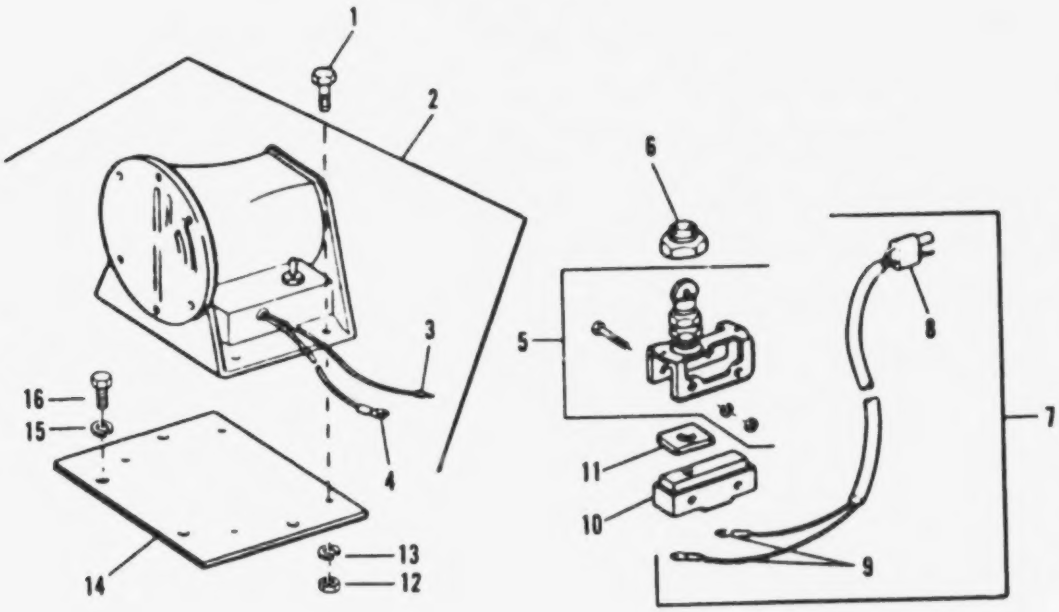

FIGURE 88. BACK UP WARNING SYSTEM

(1) ITEM NO	(2) SMR CODE	(3) CAGEC	(4) PART NUMBER	(5) DESCRIPTION AND USABLE ON CODES(UOC)	(6) QTY
				GROUP 0611: HORN,SIREN	
				FIG. 88 BACK UP WARNING SYSTEM	
1	PAOZZ	96906	MS90728-34	BOLT,MACHINE........................ UOC:V53	4
2	XDOOO	11083	8P3497	ALARM,BACK UP....................... UOC:V53	1
3	XBFZZ	11083	6K1827	.CONNECTOR,PLUG,ELEC................ UOC:V53	1
4	PAOZZ	96906	MS25036-109	.TERMINAL,LUG....................... UOC:V53	1
5	PAOZZ	91929	BZ-2R55-A2-S	SWITCH,SENSITIVE.................... UOC:V53	1
6	XDOZZ	11083	2V6077	ADAPTER............................. UOC:V53	1
7	PAFZZ	11083	2V7616	WIRING HARNESS,BRAN................. UOC:V53	1
8	PFFZZ	79550	19191	.CONNECTOR,PLUG,ELEC................ UOC:V53	1
9	PAOZZ	96906	MS25036-153	.TERMINAL,LUG....................... UOC:V53	2
10	PAOZZ	91929	MD3211-C	ADAPTER,SWITCH ACTU................. UOC:V53	1
11	PAOZZ	11083	5V965	GASKET.............................. UOC:V53	1
12	PAOZZ	23040	33797S36	NUT,PLAIN,HEXAGON................... UOC:V53	4
13	PAOZZ	96906	MS35338-45	WASHER,LOCK......................... UOC:V53	4
14	XDOZZ	11083	3V2738	PLATE............................... UOC:V53	1
15	PAOZZ	96906	MS35338-45	WASHER,LOCK......................... UOC:V53	2
16	PAOZZ	96906	MS18154-58	SCREW,CAP,HEXAGON H................. UOC:V53	2

END OF FIGURE

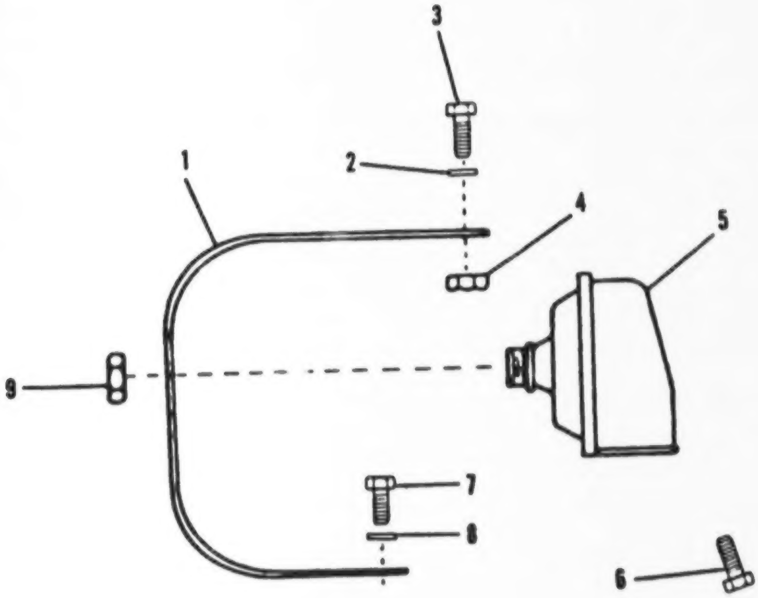

FIGURE 89. ELECTRIC HORN GROUP

(1) ITEM NO	(2) SMR CODE	(3) CAGEC	(4) PART NUMBER	(5) DESCRIPTION AND USABLE ON CODES(UOC)	(6) QTY
				GROUP 0611: HORN, SIREN	
				FIG. 89 ELECTRIC HORN GROUP	
1	XDOZZ	11083	2V7050	BRACKET............................ UOC:V53	2
2	PAOZZ	11083	5P1075	WASHER,SQUARE CONE................. UOC:V53	6
3	PAOZZ	11083	0L1351	BOLT,MACHINE....................... UOC:V53	2
4	PAOZZ	15564	1377A	NUT,PLAIN,HEXAGON.................. UOC:V53	2
5	PAOZZ	11083	7N1138	HORN,ELECTRICAL.................... UOC:V53	2
6	PAOZZ	11083	0S1594	BOLT,MACHINE....................... UOC:V53	4
7	PAOZZ	96906	MS90728-113	SCREW,CAP,HEXAGON H................ UOC:V53	2
8	PAOZZ	11083	5P1076	WASHER,SHOULDERED A................ UOC:V53	4
9	PAOZZ	96906	MS51967-14	NUT,PLAIN,HEXAGON.................. UOC:V53	2

END OF FIGURE

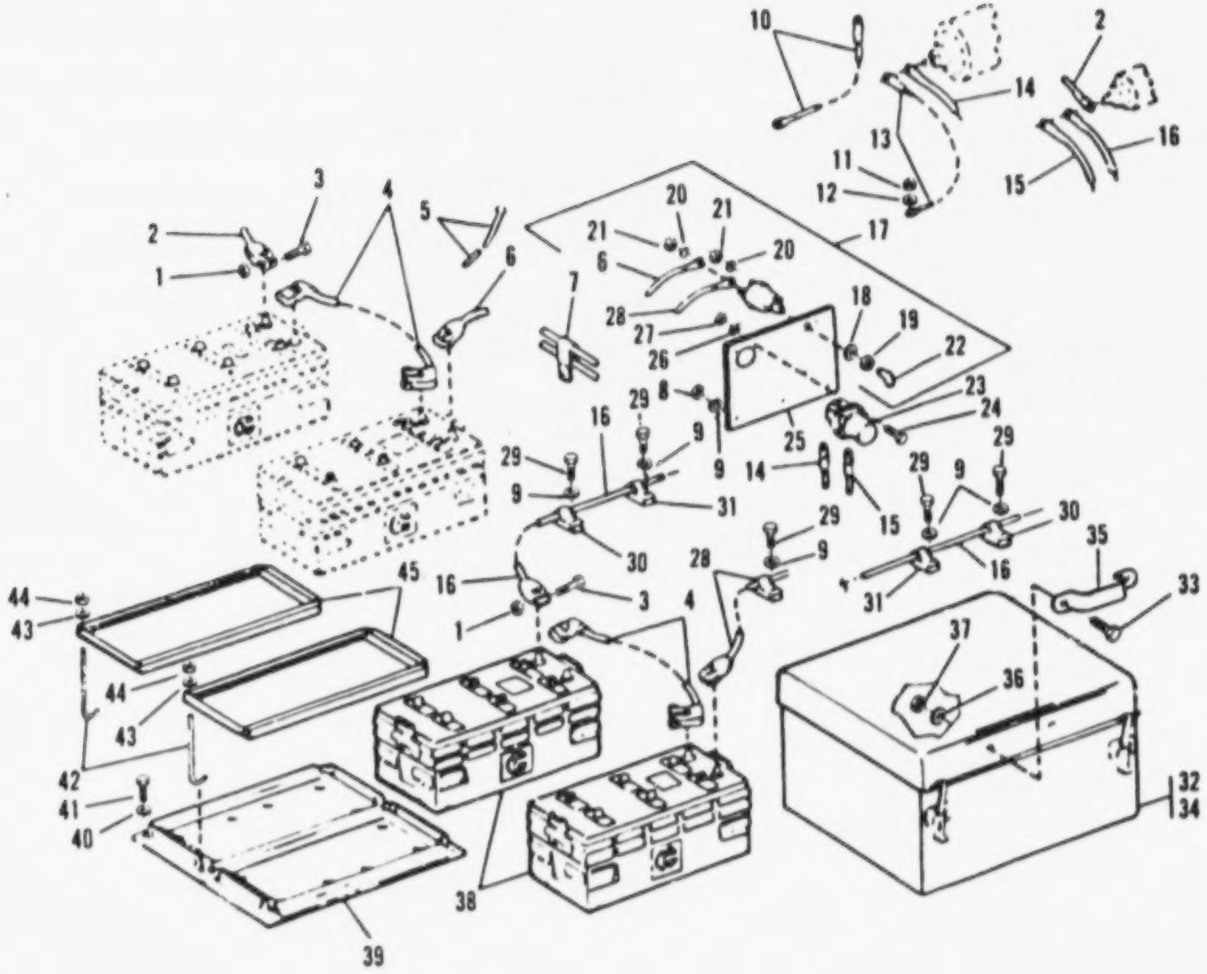

FIGURE 90. BATTERIES AND DISCONNECT SWITCH

(1) ITEM NO	(2) SMR CODE	(3) CAGEC	(4) PART NUMBER	(5) DESCRIPTION AND USABLE ON CODES(UOC)	(6) QTY
				GROUP 0612: BATTERIES	
				FIG. 90 BATTERIES AND DISCONNECT SWITCH	
1	PAOZZ	11083	1M6120	NUT,SLEEVE................................ UOC:V53	4
2	XDOOO	11083	8A2071	CABLE ASSY................................ UOC:V53	1
3	PAOZZ	11083	1M6119	BOLT,MACHINE.............................. UOC:V53	4
4	XDOOO	11083	2V7397	CABLE ASSY,BETWN BA....................... UOC:V53	2
5	PAOZZ	11083	6K8C6	TIE....................................... UOC:V53	8
6	XDOZZ	11083	3V8325	CABLE ASSY................................ UOC:V53	1
7	PAOZZ	11083	6K8178	CLIP...................................... UOC:V53	8
8	PAOZZ	15564	1377A	NUT,PLAIN,HEXAGON......................... UOC:V53	3
9	PAOZZ	11083	5M2894	WASHER,FLAT............................... UOC:V53	7
10	XDOOO	11083	2V7396	CABLE ASSY................................ UOC:V53	1
11	PAOZZ	96906	MS51967-14	NUT,PLAIN,HEXAGON......................... UOC:V53	1
12	PAOZZ	11083	4B4280	WASHER,FLAT............................... UOC:V53	1
13	PFOZZ	11083	2V9043	WIRE ASSY................................. UOC:V53	1
14	PFOZZ	11083	5R4524	CABLE ASSEMBLY,POWE....................... UOC:V53	1
15	PFOZZ	11083	5R4525	LEAD,ELECTRICAL........................... UOC:V53	1
16	PAOZZ	11083	9D2449	CABLE ASSEMBLY............................ UOC:V53	1
17	PAOZZ	11083	7N718	SWITCH,LOCK,IGNITIO....................... UOC:V53	1
18	PAOZZ	11083	7F7259	.WASHER,LOCK.............................. UOC:V53	4
19	PAOZZ	11083	6F7045	.NUT,PLAIN,HEXAGON........................ UOC:V53	4
20	PAOZZ	11083	2H3922	.WASHER,LOCK.............................. UOC:V53	1
21	PAOZZ	11083	8H5303	.NUT...................................... UOC:V53	1
22	PAOZZ	13445	8398	.SWITCH,LOCK.............................. UOC:V53	1
23	PAOZZ	28275	11674728B	CONNECTOR,RECEPTACL....................... UOC:V53	1
24	PAOZZ	11083	4B1247	SCREW,MACHINE.............................	4

(1) ITEM NO	(2) SMR CODE	(3) CAGEC	(4) PART NUMBER	(5) DESCRIPTION AND USABLE ON CODES(UOC)	(6) QTY
				UOC:V53	
25	XDOZZ	11083	5R4468	PLATE.................................. UOC:V53	1
26	PAOZZ	11083	3B4503	WASHER,LOCK........................ UOC:V53	4
27	PAOZZ	11083	4B2051	NUT,PLAIN,HEXAGON................. UOC:V53	4
28	XD000	11083	2V7394	CABLE ASSY.......................... UOC:V53	1
29	PAOZZ	96906	MS18154-58	SCREW,CAP,HEXAGON H............... UOC:V53	4
30	PAOZZ	11083	9M8406	CLIP.................................. UOC:V53	4
31	PAOZZ	11083	2Y1834	CLAMP,LOOP.......................... UOC:V53	1
32	PAOZZ	11083	5R4299	BATTERY BOX......................... UOC:V53	1
33	PAOZZ	96906	MS90728-5	SCREW,CAP,HEXAGON H............... UOC:V53	4
34	PFFZZ	11083	5R4299	BATTERY BOX......................... UOC:V53	1
35	XBOZZ	11083	9M3903	.HANDLE.............................. UOC:V53	2
36	PAOZZ	75418	3058-00843-06	WASHER,FLAT......................... UOC:V53	4
37	PAFZZ	11083	1B4430	NUT, PLAIN HEX.....................	1
38	PACZZ	11083	4S9219	BATTERY,STORAGE.................... UOC:V53	4
39	XDFZZ	11083	2V5455	TRAY ASSY........................... UOC:V53	2
40	PAOZZ	11083	8M7145	WASHER,FLAT......................... UOC:V53	12
41	PAFZZ	11083	T768	BOLT,MACHINE....................... UOC:V53	6
42	PAFZZ	11083	5V625	BOLT,HOOK........................... UOC:V53	16
43	PAFZZ	11083	8M2337	WASHER,FLAT......................... UOC:V53	16
44	PAFZZ	72962	21NU040	NUT,SELF-LOCKING,HE............... UOC:V53	16
45	XDFZZ	11083	4D1936	HOLD-DOWN ASSY,BATT............... UOC:V53	4

END OF FIGURE

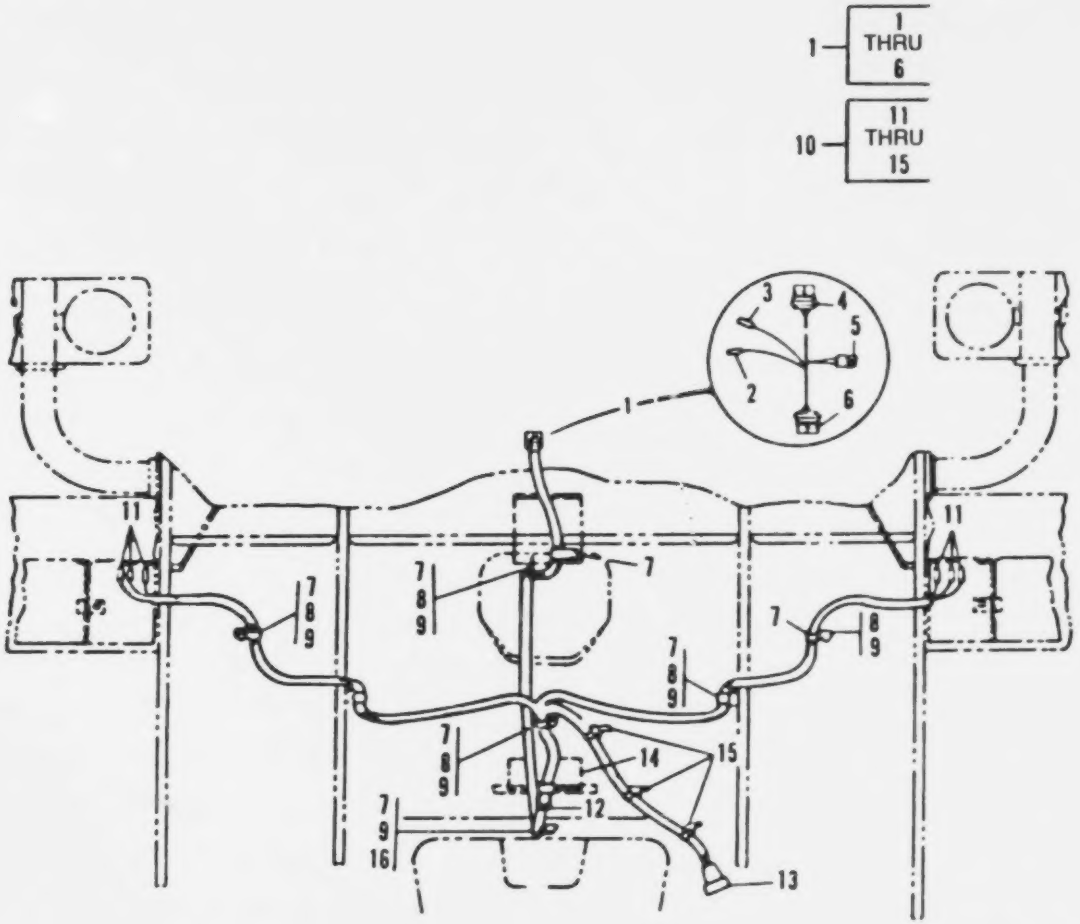

FIGURE 91. FRONT WIRING HARNESS ASSEMBLY

(1) ITEM NO	(2) SMR CODE	(3) CAGEC	(4) PART NUMBER	(5) DESCRIPTION AND USABLE ON CODES(UOC)	(6) QTY
				GROUP 0613: HULL OR CHASSIS WIRING HARNESS	
				FIG. 91 FRONT WIRING HARNESS ASSEMBLY	
1	PAFFF	11083	5R4543	WIRING HARNESS,BRAN.................. UOC:V53	1
2	PAOZZ	79550	17510	.CONNECTOR,PLUG,ELEC................ UOC:V53	1
3	PAOZZ	79550	11856	.TERMINAL,QUICK DISC................ UOC:V53	1
4	PAOZZ	79550	19189C	.CONNECTOR,PLUG,ELEC................ UOC:V53	1
5	PFFZZ	79550	19191	.CONNECTOR,PLUG,ELEC................ UOC:V53	1
6	PAOZZ	79550	19189D	.CONNECTOR,PLUG,ELEC................ UOC:V53	1
7	PBOZZ	11083	4D7754	CLAMP,LOOP.......................... UOC:V53	9
8	PAOZZ	96906	MS18154-58	SCREW,CAP,HEXAGON H................. UOC:V53	6
9	PAOZZ	96906	MS35338-45	WASHER,LOCK......................... UOC:V53	7
10	XBFFF	11083	5R4544	HARNESS ASSY........................ UOC:V53	1
11	PAOZZ	79550	17510	.CONNECTOR,PLUG,ELEC................ UOC:V53	6
12	PAOZZ	79550	19189C	.CONNECTOR,PLUG,ELEC................ UOC:V53	1
13	PAOZA	96906	MS3451W24-10S	.CONNECTOR,PLUG,ELEC................ UOC:V53	1
14	XDOZZ	11083	9K0700	GROMMET............................. UOC:V53	1
15	PAOZZ	11083	3S2093	STRAP............................... UOC:V53	3
16	PAOZZ	15564	1377A	NUT,PLAIN,HEXAGON................... UOC:V53	1

END OF FIGURE

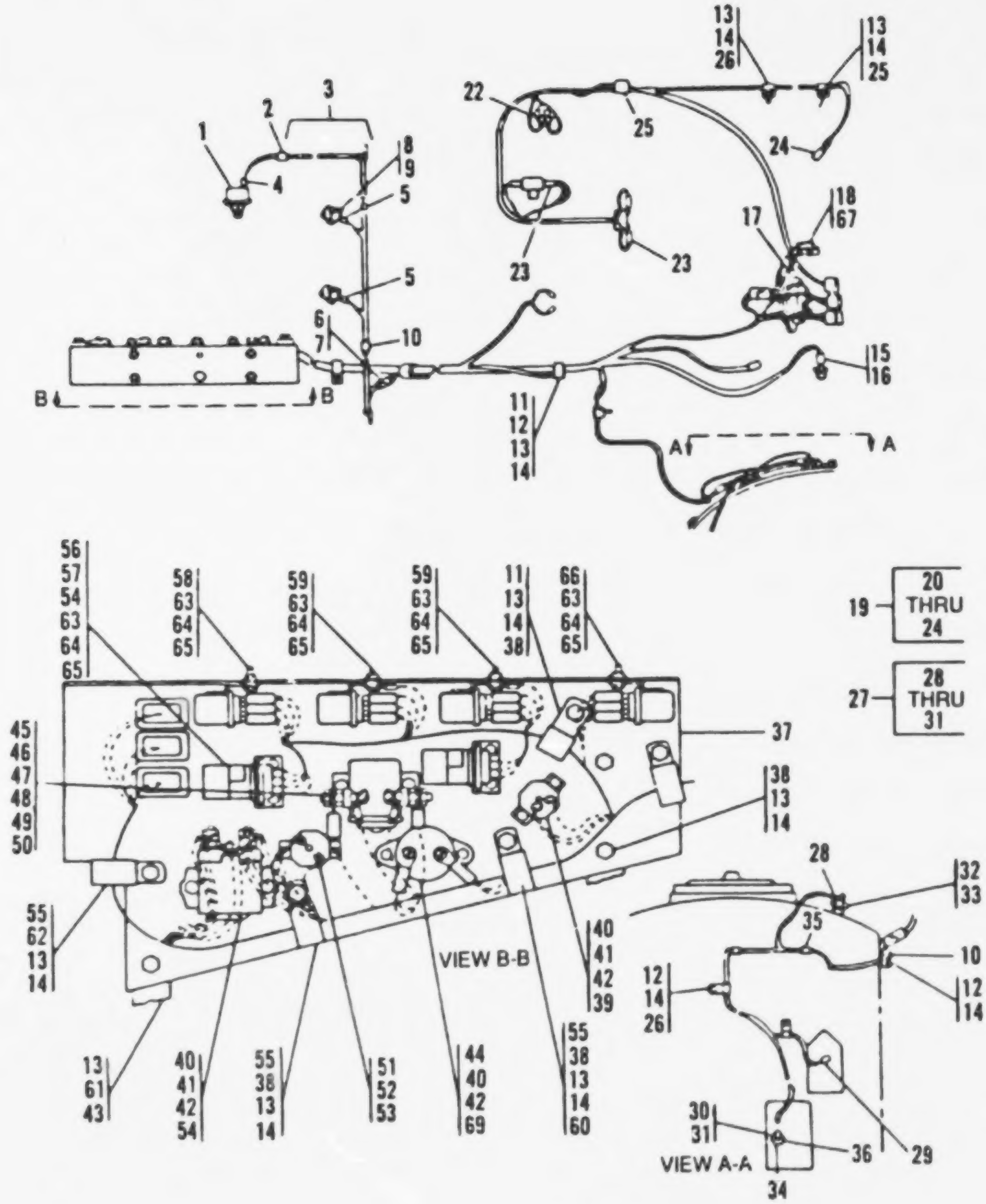

FIGURE 92. REAR WIRING ASSEMBLY

(1) ITEM NO	(2) SMR CODE	(3) CAGEC	(4) PART NUMBER	(5) DESCRIPTION AND USABLE ON CODES(UOC)	(6) QTY
				GROUP 0613: HULL OR CHASSIS WIRING HARNESS	
				FIG. 92 REAR WIRING ASSEMBLY	
1	PAOZZ	11083	7N4351	SWITCH,PRESSURE........................ UOC:V53	1
2	PAOZZ	11083	8M2772	CLAMP,LOOP............................. UOC:V53	2
3	XDFOO	11083	5V3994	HARNESS ASSY........................... UOC:V53	1
4	PAOZZ	11083	5P1475	.TERMINAL,LUG.......................... UOC:V53	1
5	PAOZZ	11083	6K1828	.CONNECTOR,PLUG,ELEC................... UOC:V53	2
6	PAOZZ	79550	19188A	.CONNECTOR,PLUG,ELEC................... UOC:V53	1
7	PAOZZ	79550	11856	.TERMINAL,QUICK DISC................... UOC:V53	2
8	XDOFF	11083	6P5443	SWITCH,FLTR BYP........................ UOC:V53	2
9	PAOZZ	99517	A180-119MILP2573 2	PACKING,PREFORMED...................... UOC:V53	2
10	PBOZZ	11083	4D7794	CLAMP,LOOP............................. UOC:V53	5
11	PFOZZ	11083	1S1015	CLAMP,LOOP............................. UOC:V53	6
12	PAOZZ	11083	0T0102	SCREW, CAP HEX.........................	2
13	PAOZZ	15564	1377A	NUT,PLAIN,HEXAGON...................... UOC:V53	8
14	PAOZZ	11083	9F5644	WASHER, LOCK...........................	6
15	PAOZZ	91929	BZ-2R55-A2-S	SWITCH,SENSITIVE....................... UOC:V53	1
16	XDOZZ	11083	2V6077	ADAPTER................................ UOC:V53	1
17	PAOZZ	11083	7K0447	HORN,ELECTRICAL........................ UOC:V53	1
18	PAOZZ	96906	MS90728-32	BOLT,MACHINE........................... UOC:V53	2
19	PFFFF	11083	5V4041	WIRING HARNESS,BRAN.................... UOC:V53	1
20	PFFZZ	79550	19191	.CONNECTOR,PLUG,ELEC................... UOC:V53	1
21	PAOZZ	96906	MS25036-110	.TERMINAL,LUG.......................... UOC:V53	1
22	PAOZZ	59730	RB-2207	.TERMINAL,LUG.......................... UOC:V53	2
23	PAOZZ	79550	19189C	.CONNECTOR,PLUG,ELEC................... UOC:V53	2
24	PAOZZ	79550	11856	.TERMINAL,QUICK DISC................... UOC:V53	4
25	PBOZZ	11083	8M2770	CLAMP,LOOP.............................	2

(1) ITEM NO	(2) SMR CODE	(3) CAGEC	(4) PART NUMBER	(5) DESCRIPTION AND USABLE ON CODES(UOC)	(6) QTY
				UOC:V53	
26	PBOZZ	11083	4D8123	CLAMP,LOOP........................... UOC:V53	5
27	MFFOO	11083	4V4042	HARNESS ASSY MAKE FROM WIRE P/N 5P674.............................. UOC:V53	1
28	PAOZZ	11083	2L8074	.TERMINAL,LUG........................ UOC:V53	1
29	PFOZZ	79550	19192	.LEAD ASSEMBLY,ELECT................. UOC:V53	1
30	XAOZZ	79550	413472	.TERMINAL,MALE....................... UOC:V53	1
31	PAOZZ	11083	5P1475	.TERMINAL,LUG........................ UOC:V53	1
32	PAOZZ	11083	7N5380	TRANSMITTER,PRESSUR.................. UOC:V53	1
33	PAOZZ	81349	M83248/2-910	PACKING,PREFORMED.................... UOC:V53	1
34	PAOZZ	11083	4D2297	PACKING,PREFORMED.................... UOC:V53	2
35	XDOZZ	78553	C40699-017	CLIP................................. UOC:V53	2
36	XDOZZ	11083	2V5116	SWITCH,TEMP.......................... UOC:V53	1
37	XDOZZ	11083	5V3832	SHEET................................ UOC:V53	1
38	PAOZZ	11083	0S1594	BOLT,MACHINE......................... UOC:V53	3
39	PAOZZ	11083	3R8920	CIRCUIT BREAKER...................... UOC:V53	1
40	PAOZZ	11083	9B7233	WASHER,LOCK.......................... UOC:V53	2
41	PAOZZ	11083	3D9799	SCREW,MACHINE........................ UOC:V53	2
42	PAOZZ	11083	4B4863	WASHER,FLAT.......................... UOC:V53	2
43	XDOZZ	11083	2V7993	BAR.................................. UOC:V53	2
44	XDOZZ	11083	2V2380	CIRCUIT BREAKER,60................... UOC:V53	1
45	PAOZZ	16764	001481	RELAY,ELECTROMAGNET.................. UOC:V53	1
46	PAOZZ	96906	MS35691-13	NUT,PLAIN,HEXAGON.................... UOC:V53	4
47	PAOZZ	11083	4M62	WASHER,LOCK.......................... UOC:V53	4
48	PAOZZ	11083	8F0908	WASHER,SPECIAL....................... UOC:V53	4
49	PAOZZ	24617	103092	NUT,PLAIN,HEXAGON.................... UOC:V53	4
50	PAOZZ	96906	MS35338-42	WASHER,LOCK.......................... UOC:V53	4

(1) ITEM NO	(2) SMR CODE	(3) CAGEC	(4) PART NUMBER	(5) DESCRIPTION AND USABLE ON CODES(UOC)	(6) QTY
51	PAOZZ	11083	9M9085	CIRCUIT BREAKER........................ UOC:V53	1
52	PAOZZ	24617	103092	NUT,PLAIN,HEXAGON................. UOC:V53	2
53	PAOZZ	11083	8F1434	WASHER,LOCK....................... UOC:V53	2
54	PAOZZ	11083	7N5933	RELAY,ELECTROMAGNET................ UOC:V53	1
55	PBOZZ	75272	COV-2113	CLAMP,LOOP......................... UOC:V53	4
56	XDOZZ	11083	3V6176	BRACKET............................ UOC:V53	2
57	PAOZZ	11083	2V9473	SEMICONDUCTOR DEVIC................ UOC:V53	2
58	PAOZZ	11083	8N2390	RELAY,ELECTROMAGNET................ UOC:V53	1
59	PAOZZ	20308	PH-23	RELAY,ELECTROMAGNET................ UOC:V53	2
60	XDOZZ	11083	3S8536	SPACER............................. UOC:V53	2
61	PAOZZ	11083	9L9132	WASHER............................. UOC:V53	4
62	PAOZZ	11083	0S1594	BOLT,MACHINE....................... UOC:V53	1
63	PAOZZ	96906	MS90728-5	SCREW,CAP,HEXAGON H................ UOC:V53	16
64	XDOZZ	11083	1H3244	LOCKWASHER......................... UOC:V53	16
65	PAOZZ	24617	426376	NUT,PLAIN,HEXAGON.................. UOC:V53	16
66	PAOZZ	11083	9D8661	RELAY.............................. UOC:V53	1
67	PAOZZ	11083	3F9556	WASHER,LOCK........................ UOC:V53	2
68	PAOZZ	11083	2S9556	SCREW,CAP,HEXAGON H................ UOC:V53	2
69	XDOZZ	11083	4B2049	NUT,PLAIN,HEXAGON.................. UOC:V53	2
70	PFOZZ	11083	4B4278	WASHER,FLAT........................ UOC:V53	1
71	XDFZZ	70611	3000M362B-3	TERMINAL........................... UOC:V53	1
72	PAFZZ	11083	9G2399	SCREW,CAP,HEXAGON H................ UOC:V53	1
73	PAFZZ	11083	3F3711	WASHER,FLAT........................ UOC:V53	1
74	PAFZZ	96906	MS21044N3	NUT,SELF-LOCKING,HE................ UOC:V53	1

END OF FIGURE

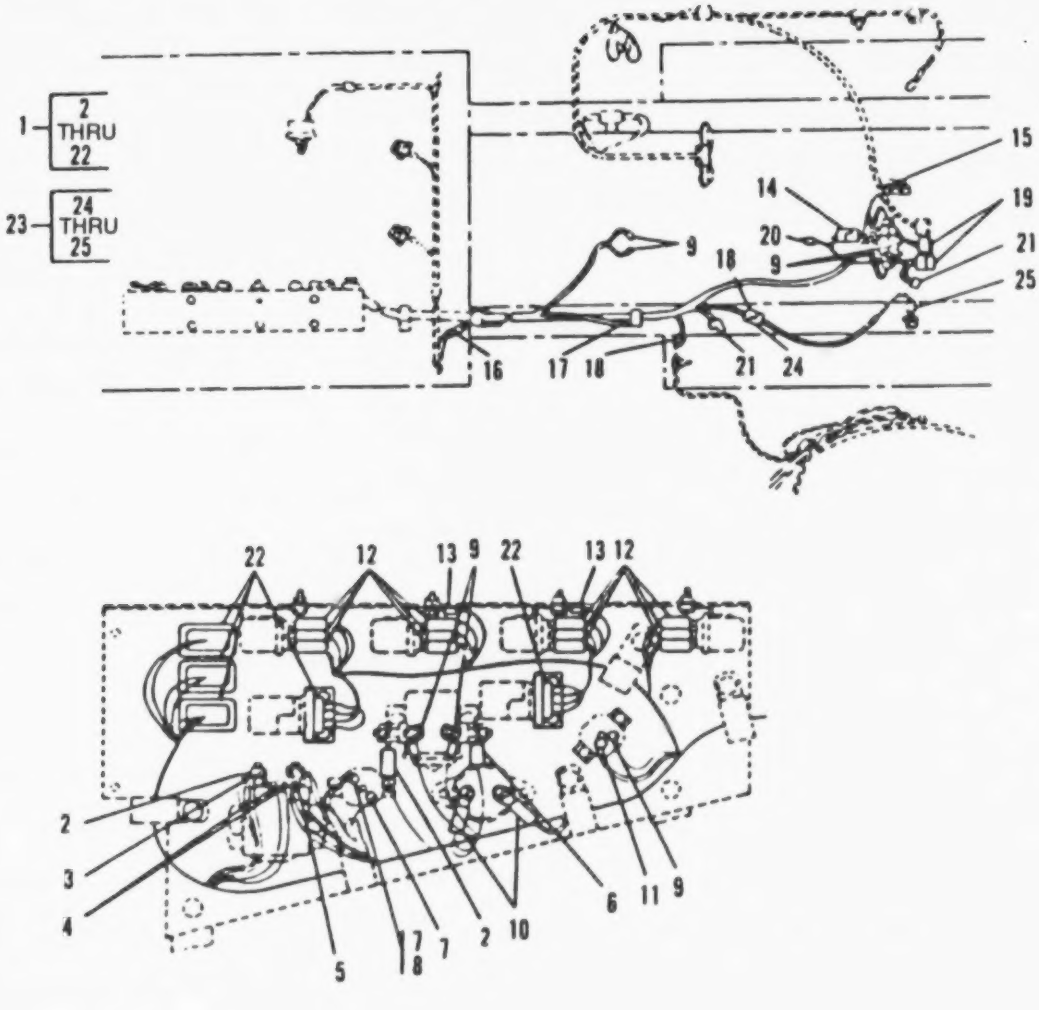

FIGURE 93. REAR WIRING HARNESS ASSEMBLY

SECTION II

(1) ITEM NO	(2) SMR CODE	(3) CAGEC	(4) PART NUMBER	(5) DESCRIPTION AND USABLE ON CODES(UOC)	(6) QTY
				GROUP 0613: HULL OF CHASSIS WIRING HARNESS	
				FIG. 93 REAR WIRING HARNESS ASSEMBLY	
1	PAFFF	11083	5R4569	WIRING HARNESS,BRAN.................. UOC:V53	1
2	PAOZZ	96906	MS25036-117	.TERMINAL,LUG........................ UOC:V53	2
3	XDOZZ	11083	2L8051	.TERMINAL,LUG........................ UOC:V53	1
4	PAOZZ	96906	MS25036-108	.TERMINAL,LUG........................ UOC:V53	2
5	PAOZZ	96906	MS25036-124	.TERMINAL,LUG........................ UOC:V53	1
6	PAOZZ	96906	MS25036-113	.TERMINAL,LUG........................ UOC:V53	2
7	PAOZZ	96906	MS25036-153	.TERMINAL,LUG........................ UOC:V53	2
8	PAOZZ	96906	MS25036-156	.TERMINAL,LUG........................ UOC:V53	1
9	PAOZZ	11083	5P1475	.TERMINAL,LUG........................ UOC:V53	7
10	PAOZZ	96906	MS25036-120	.TERMINAL,LUG........................ UOC:V53	2
11	PAOZZ	11083	5P1477	.TERMINAL,LUG........................ UOC:V53	1
12	PAOZZ	79550	11856	.TERMINAL,QUICK DISC................ UOC:V53	17
13	PAOZZ	11083	2L8077	.TERMINAL............................ UOC:V53	2
14	PAOZZ	79550	191890	.CONNECTOR,PLUG,ELEC................ UOC:V53	1
15	PAOZZ	96906	MS25036-109	.TERMINAL,LUG........................ UOC:V53	1
16	PAOZZ	79550	191888	.CONNECTOR,PLUG,ELEC................ UOC:V53	1
17	PAOZZ	96906	MS25036-154	.TERMINAL,LUG........................ UOC:V53	1
18	PAOZZ	79550	19193	.CONNECTOR,PLUG,ELEC................ UOC:V53	2
19	PAOZZ	11083	5P3160	.CONNECTOR,PLUG,ELEC................ UOC:V53	3
20	PAOZZ	79550	11851	.TERMINAL,QUICK DISC................ UOC:V53	1
21	PFFZZ	79550	19191	.CONNECTOR,PLUG,ELEC................ UOC:V53	2
22	PAOZZ	79550	16274	.CONNECTOR,RECEPTACL................ UOC:V53	5
23	MOOOO	11083	5V6834	HARNESS ASSY MAKE FROM WIRE P/N 5P680............................ UOC:V53	1

(1) ITEM NO	(2) SMR CODE	(3) CAGEC	(4) PART NUMBER	(5) DESCRIPTION AND USABLE ON CODES(UOC)	(6) QTY
24	PAOZZ	11083	6K6383	.CONNECTOR,PLUG,ELEC................ UOC:V53	1
25	PAOZZ	96906	MS25036-153	.TERMINAL,LUG..................... UOC:V53	2

END OF FIGURE

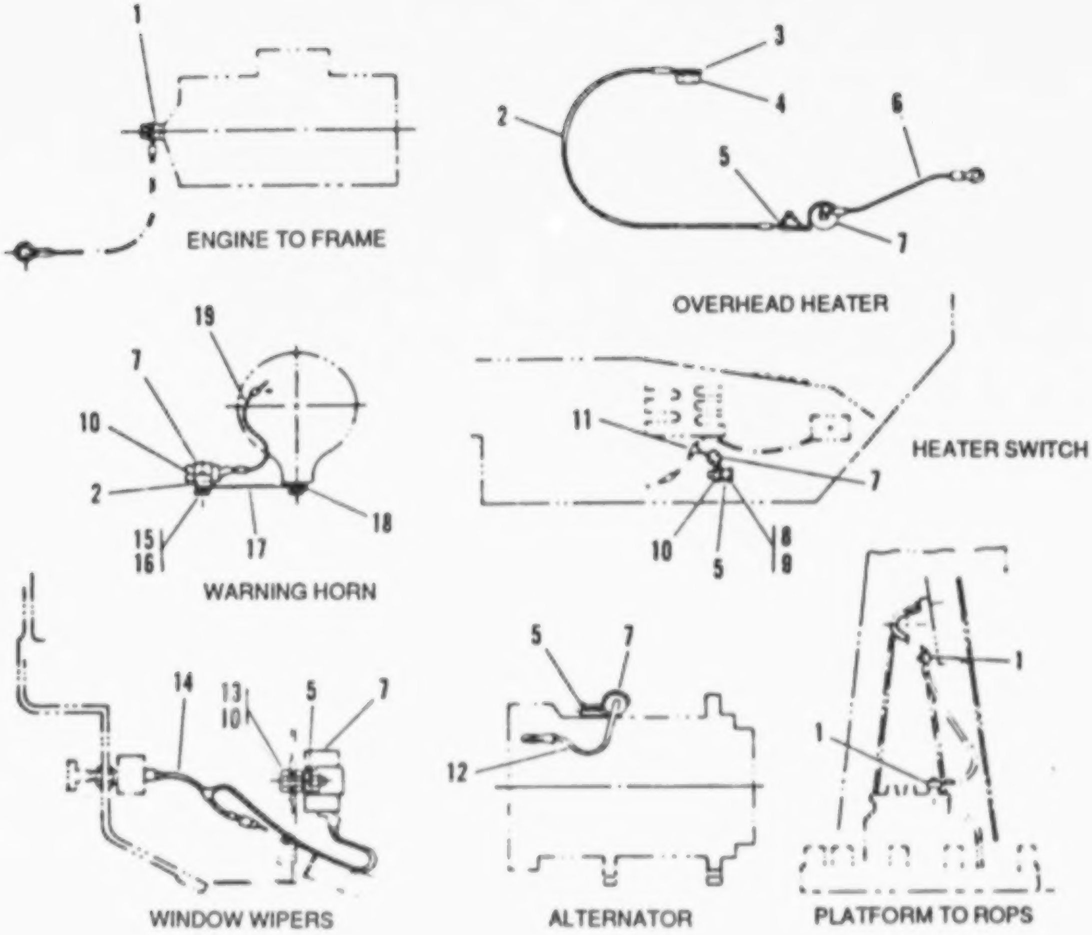

FIGURE 94. RADIO INTERFERENCE SUPPRESSION SYSTEM

(1) ITEM NO	(2) SMR CODE	(3) CAGEC	(4) PART NUMBER	(5) DESCRIPTION AND USABLE ON CODES(UOC)	(6) QTY
				GROUP 0615: RADIO INTERFERENCE SUPPRESSION	
				FIG. 94 RADIO INTERFERENCE SUPPRESSION SYSTEM	
1	PAOZZ	96906	MS35335-37	WASHER,LOCK........................ UOC:V53	4
2	PAOZZ	11083	5R4690	LEAD,ELECTRICAL.................... UOC:V53	1
3	PAOZZ	45152	EE45626	WASHER,LOCK........................ UOC:V53	1
4	PAOZZ	15564	1377A	NUT,PLAIN,HEXAGON.................. UOC:V53	1
5	PAOZZ	11083	1H3338	LOCKWASHER......................... UOC:V53	9
6	PAOZZ	11083	5R4691	LEAD,ELECTRICAL.................... UOC:V53	1
7	PAOZZ	11083	5R4610	CAPACITOR.......................... UOC:V53	3
8	PAOZZ	53711	5979393-1	SCREW,CAP,HEXAGON H................ UOC:V53	1
9	PAOZZ	78189	WD23875	WASHER,SPRING TENSI................ UOC:V53	1
10	PAOZZ	24617	426376	NUT,PLAIN,HEXAGON.................. UOC:V53	2
11	XDCOO	11083	5R4688	WIRE ASSY.......................... UOC:V53	1
12	PAOZZ	11083	5R4686	LEAD,ELECTRICAL.................... UOC:V53	1
13	PAOZZ	80020	8775C-25	BOLT,MACHINE....................... UOC:V53	1
14	XDCOO	11083	5R4689	WIRE ASSY.......................... UOC:V53	1
15	PAOZZ	11083	51615	BOLT,MACHINE....................... UOC:V53	1
16	PAOZZ	11083	5P0537	WASHER............................. UOC:V53	1
17	XDOZZ	11083	3M2452	STRIP.............................. UOC:V53	1
18	PAOZZ	96906	MS35335-34	WASHER,LOCK........................ UOC:V53	2
19	XDOOO	11083	5R4687	WIRE ASSY.......................... UOC:V53	1

END OF FIGURE

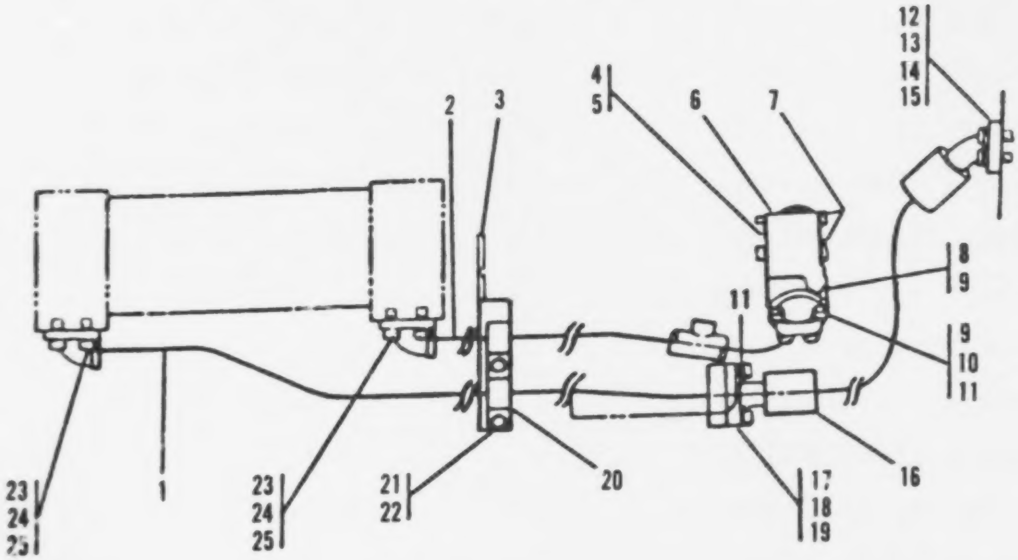

FIGURE 95. TORQUE CONVERTER LINES

(1) ITEM NO	(2) SMR CODE	(3) CAGEC	(4) PART NUMBER	(5) DESCRIPTION AND USABLE ON CODES(UOC)	(6) QTY
				GROUP 07: TRANSMISSION	
				GROUP 0708: TORQUE CONVERTER	
				FIG. 95 TORQUE CONVERTER LINES	
1	XDFZZ	11083	2V2258	TUBE ASSY.......................... UOC:V53	1
2	XDFZZ	11083	2V2541	TUBE ASSY.......................... UOC:V53	1
3	XDFZZ	11083	3VC729	BRACKET ASSY....................... UOC:V53	1
4	PAFZZ	11083	8M4443	PACKING,PREFORMED.................. UOC:V53	1
5	PAFZZ	11083	8M8157	PACKING,PREFORMED.................. UOC:V53	1
6	XDFFF	11083	8P1471	VALVE,RLF.......................... UOC:V53	1
7	PAFZZ	11083	T65	BOLT,MACHINE....................... UOC:V53	3
8	PAFZZ	11083	1P37C5	SEAL............................... UOC:V53	1
9	XDFZZ	11083	1P5762	FLANGE,HALF........................ UOC:V53	2
10	PAFZZ	11083	1A1460	BOLT,MACHINE....................... UOC:V53	4
11	PAFZZ	11083	5P8245	WASHER,FLAT........................ UOC:V53	8
12	PAFZZ	11083	4J0522	PACKING,PREFORMED.................. UOC:V53	1
13	XDFZZ	11083	1P44578	FLANGE,HALF........................ UOC:V53	2
14	PAFZZ	96906	MS90728-89	SCREW,CAP,HEXAGON H................ UOC:V53	4
15	PAFZZ	11083	5P8244	WASHER,FLAT........................ UOC:V53	4
16	MFFFF	11083	2V5040	HOSE ASSY MAKE FROM HOSE P/N 5P182. UOC:V53	1
17	PAFZZ	11083	4J0524	PACKING,PREFORMED.................. UOC:V53	1
18	PFFZZ	11083	1P4579	FLANGE............................. UOC:V53	2
19	PAFZZ	11083	S1587	BOLT,MACHINE....................... UOC:V53	4
20	PAFZZ	11083	2V2792	STRAP,RETAINING.................... UOC:V53	1
21	PAFZZ	11083	0L1351	BOLT,MACHINE....................... UOC:V53	2
22	PAFZZ	11083	5M2894	WASHER,FLAT........................ UOC:V53	2
23	PAFZZ	11083	4J0527	SEAL-O-RING........................ UOC:V53	2

(1) ITEM NO	(2) SMR CODE	(3) CAGEC	(4) PART NUMBER	(5) DESCRIPTION AND USABLE ON CODES(UOC)	(6) QTY
24	PAFZZ	11083	7B3235	BOLT,MACHINE........................ UOC:V53	8
25	PAFZZ	96906	MS35338-48	WASHER,LOCK........................ UOC:V53	8

END OF FIGURE

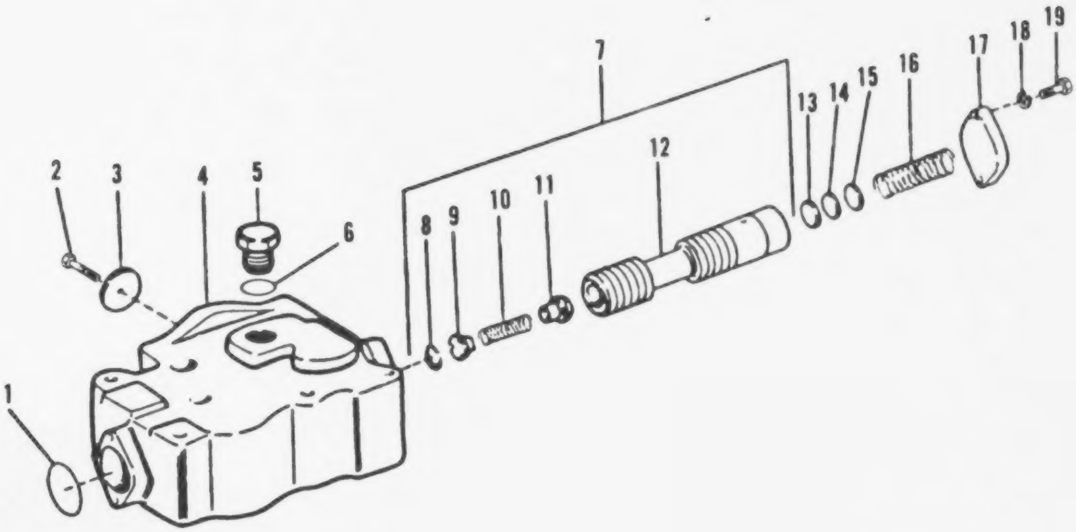

FIGURE 96. PRESSURE RELIEF VALVE ASSEMBLY

(1) ITEM NO	(2) SMR CODE	(3) CAGEC	(4) PART NUMBER	(5) DESCRIPTION AND USABLE ON CODES(UOC)	(6) QTY
				GROUP 0708: TORQUE CONVERTER	
				FIG. 96 PRESSURE RELIEF VALVE ASSEMBLY	
1	PAHZZ	11083	8M4986	PACKING,PREFORMED.................... UOC:V53	2
2	PAHZZ	11083	7B3028	SCREW,DRIVE.......................... UOC:V53	1
3	XBHZZ	11083	7G8964	PLATE,IDENT.......................... UOC:V53	1
4	XAHZZ	11083	8P1455	BODY,RV.............................. UOC:V53	1
5	PAHZZ	11083	9S4191	PLUG,MACHINE THREAD.................. UOC:V53	2
6	PBHZZ	25184	906-737-70	PACKING,PREFORMED.................... UOC:V53	2
7	XAHZZ	11083	2P4538	SPOOL ASSY,RLF....................... UOC:V53	1
8	XAHZZ	80756	RR75	.RING,RTNG........................... UOC:V53	1
9	XAHZZ	11083	8M2537	.RETAINER............................ UOC:V53	1
10	PAFZZ	11083	5M9548	.SPRING,HELICAL,COMP................. UOC:V53	1
11	XAHZZ	11083	9M4313	.POPPET.............................. UOC:V53	1
12	XAHZZ	11083	2P4539	.SPOOL............................... UOC:V53	1
13	PAHZZ	11083	5M9624	SPACER............................... UOC:V53	V
14	PAHZZ	11083	5M9623	WASHER BLANK......................... UOC:V53	V
15	PAHZZ	11083	5M9622	SPACER,PLATE......................... UOC:V53	V
16	PAHZZ	11083	8M8627	SPRING,HELICAL,COMP.................. UOC:V53	1
17	XAHZZ	11083	4M8239	COVER,ACCESS......................... UOC:V53	2
18	PAHZZ	96906	MS35338-45	WASHER,LOCK.......................... UOC:V53	4
19	PAHZZ	11083	0S1594	BOLT,MACHINE......................... UOC:V53	4

END OF FIGURE

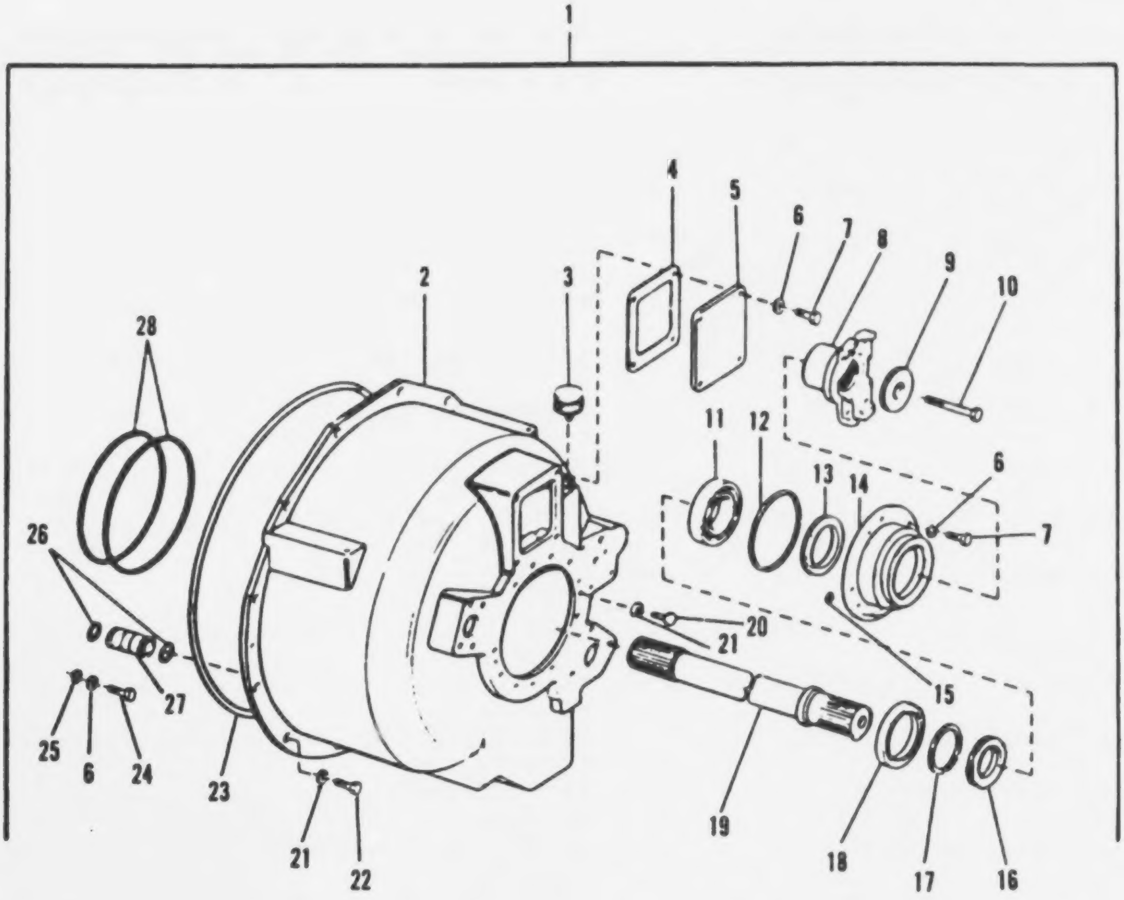

FIGURE 97. TORQUE CONVERTER

(1) ITEM NO	(2) SMR CODE	(3) CAGEC	(4) PART NUMBER	(5) DESCRIPTION AND USABLE ON CODES(UOC)	(6) QTY
				GROUP 0708: TORQUE CONVERTER	
				FIG. 97 TORQUE CONVERTER	
1	XDFHH	11083	5R4358	CONVERTER,TORQUE........................ UOC:V53	1
2	XDHZZ	11083	2P5806	.COVER,TORQUE CONV................. UOC:V53	1
3	PAOZZ	11083	8S5820	.BREATHER.......................... UOC:V53	1
4	PAHZZ	11083	4D8621	.GASKET............................ UOC:V53	1
5	XDHZZ	11083	5D6535	.COVER............................. UOC:V53	1
6	PAHZZ	96906	MS35338-45	.WASHER,LOCK....................... UOC:V53	11
7	PAHZZ	11083	1A2029	.BOLT,MACHINE...................... UOC:V53	10
8	XDHZZ	11083	1P7521	.YOKE.............................. UOC:V53	1
9	XDHZZ	11083	4S5838	.RETAINER.......................... UOC:V53	1
10	PAHZZ	11083	L1558	.BOLT,MACHINE...................... UOC:V53	1
11	PBHZZ	12603	214596	.BEARING,BALL,ANNULA............... UOC:V53	1
12	PAHZZ	11083	4S5898	.PACKING,PREFORMED................. UOC:V53	1
13	PAHZZ	11083	5P713	.SEAL,PLAIN........................ UOC:V53	1
14	XDHZZ	11083	8P2934	.CARRIER,BEARING................... UOC:V53	1
15	PAHZZ	11083	8M8282	.SEAL.............................. UOC:V53	1
16	XDHZZ	11083	5S0928	.CARRIER,SEAL RING................. UOC:V53	1
17	PBHZZ	11083	1M3937	.SEAL RING,METAL................... UOC:V53	1
18	PAHZZ	11083	5S927	.RING,WEARING...................... UOC:V53	1
19	XDHZZ	11083	7G2608	.SHAFT,CENTER...................... UOC:V53	1
20	PAHZZ	11083	7B3235	.BOLT,MACHINE...................... UOC:V53	11
21	PAHZZ	96906	MS35338-48	.WASHER,LOCK....................... UOC:V53	22
22	PAHZZ	96906	MS90728-113	.SCREW,CAP,HEXAGON H............... UOC:V53	11
23	PAHZZ	11083	4H6730	.PACKING,PREFORMED................. UOC:V53	1
24	PAHZZ	11083	0L1351	.BOLT,MACHINE...................... UOC:V53	1

(1) ITEM NO	(2) SMR CODE	(3) CAGEC	(4) PART NUMBER	(5) DESCRIPTION AND USABLE ON CODES(UOC)	(6) QTY
25	PAHZZ	11083	6P8339	.LOCKING PLATE,NUT A................ UOC:V53	1
26	PAHZZ	11083	8M4433	.PACKING,PREFORMED.................. UOC:V53	2
27	XDHZZ	11083	6P8340	.SLEEVE............................. UOC:V53	1
28	PAHZZ	11083	8L3017	.SEAL,PLAIN......................... UOC:V53	2

END OF FIGURE

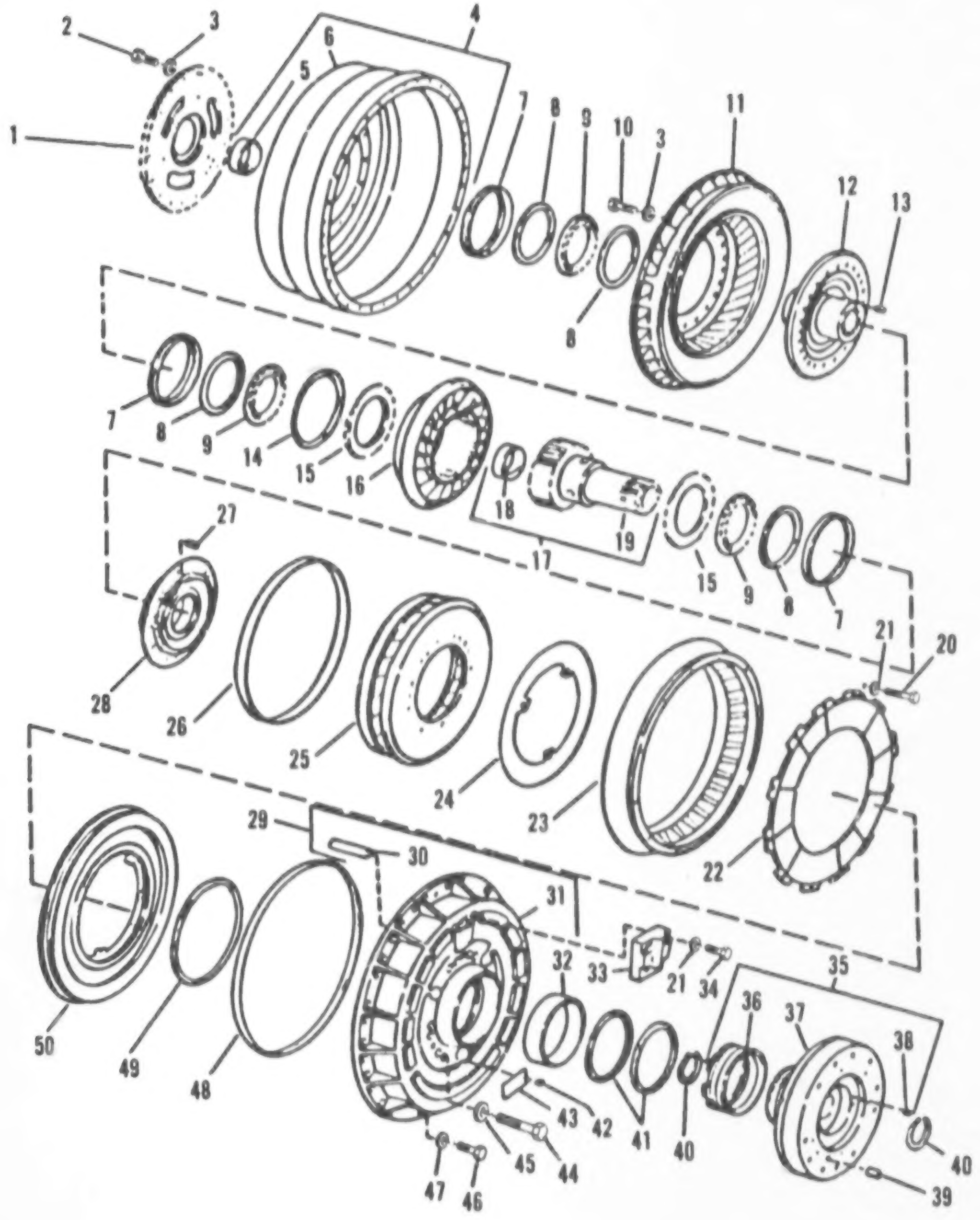

FIGURE 98. TORQUE CONVERTER ASSEMBLY

(1) ITEM NO	(2) SMR CODE	(3) CAGEC	(4) PART NUMBER	(5) DESCRIPTION AND USABLE ON CODES(UOC)	(6) QTY
				GROUP 0708: TORQUE CONVERTER	
				FIG. 98 TORQUE CONVERTER ASSEMBLY	
1	XDHZZ	61208	217506	SPICER,DRIVE........................ UOC:V53	1
2	PAHZZ	96906	MS90728-113	SCREW,CAP,HEXAGON H................. UOC:V53	18
3	PFFZZ	11083	2M849	WASHER,FLAT......................... UOC:V53	24
4	XDHHH	11083	2P5861	HOUSING ASSY,ROT.................... UOC:V53	1
5	PFHZZ	75174	LSB25	.BEARING,SLEEVE..................... UOC:V53	1
6	XAHZZ	11083	2P4394	.HOUSING............................ UOC:V53	1
7	XDHZZ	11083	1T0806	RETAINER,THRUST BRG................. UOC:V53	3
8	XDHZZ	61208	M-2086-AC	BEARING,RACE,THRUST................. UOC:V53	4
9	XDHZZ	11083	1T0786	RETAINER AND ROLLER................. UOC:V53	3
10	PAHZZ	11083	0S1595	BOLT,MACHINE........................ UOC:V53	24
11	XDHZZ	11083	2P4470	TURBINE,CONV........................ UOC:V53	1
12	XDHZZ	11083	2P0768	HUB,TURBINE......................... UOC:V53	1
13	XDHZZ	61208	211444-A	PIN,THRUST RACE..................... UOC:V53	1
14	XDHZZ	61208	A-2669-DS	RING,RETAINING...................... UOC:V53	2
15	XDHZZ	61208	204151-B	PLATE............................... UOC:V53	2
16	XDHZZ	11083	3P7230	STATOR,CONV......................... UOC:V53	1
17	XDHHH	11083	2P4389	CARRIER ASSY,STATOR................. UOC:V53	1
18	PFHZZ	11083	1T0766	.BEARING,SLEEVE..................... UOC:V53	1
19	XAHZZ	11083	7G2318	.CARRIER,STATOR..................... UOC:V53	1
20	PAHZZ	96906	MS90728-33	BOLT,MACHINE........................ UOC:V53	12
21	PAHZZ	11083	9M1974	WASHER,FLAT......................... UOC:V53	16
22	XDHZZ	11083	2P9336	DISC ASSY,CLUTCH.................... UOC:V53	1
23	XAHZZ	11083	2P9187	IMPELLER,CONV OUTER................. UOC:V53	1
24	XDHZZ	11083	2P5698	PLATE,REACTION...................... UOC:V53	1

(1) ITEM NO	(2) SMR CODE	(3) CAGEC	(4) PART NUMBER	(5) DESCRIPTION AND USABLE ON CODES(UOC)	(6) QTY
25	XDHZZ	11083	8P6836	IMPELLER,CONV........................ UOC:V53	1
26	XDHZZ	11083	2P9334	RING,PLASTIC.......................... UOC:V53	1
27	PAHZZ	11083	2K9062	PIN.................................... UOC:V53	3
28	XAHZZ	11083	9G1904	HUB,IMPELLER.......................... UOC:V53	1
29	XDHHH	11083	8P6839	HOUSING ASSY,CLUTCH................... UOC:V53	1
30	PAHZZ	11083	1M3151	.PIN,STRAIGHT,HEADLE.................. UOC:V53	3
31	XAHZZ	11083	8P6838	.HOUSING............................... UOC:V53	1
32	XDHZZ	11083	2P5697	.BEARING,SLEEVE....................... UOC:V53	1
33	XDHZZ	11083	6P0384	COVER.................................. UOC:V53	1
34	PAHZZ	11083	1T414	BOLT,MACHINE.......................... UOC:V53	4
35	XDHHH	11083	2P4448	CARRIER ASSY.......................... UOC:V53	1
36	XAHZZ	11083	6P6241	.CARRIER,RING......................... UOC:V53	1
37	XDHZZ	11083	8P8952	.CARRIER,BRG.......................... UOC:V53	1
38	PAHZZ	19207	7373635	.PLUG,EXPANSION....................... UOC:V53	2
39	PAHZZ	11083	2H2255	.PIN,STRAIGHT,HEADLE.................. UOC:V53	1
40	XDHZZ	11083	5P9506	RING,RING,EXT......................... UOC:V53	2
41	XDHZZ	11083	3P3673	RING,SEAL............................. UOC:V53	2
42	PAFZZ	96906	MS21318-21	SCREW,DRIVE........................... UOC:V53	2
43	XDFZZ	11083	3P8963	PLATE,NAME............................ UOC:V53	1
44	PAHZZ	11083	310228	SCREW,MACHINE......................... UOC:V53	12
45	PAHZZ	19207	6299613	WASHER,FLAT........................... UOC:V53	12
46	PAHZZ	11083	1A2029	BOLT,MACHINE.......................... UOC:V53	36
47	PAHZZ	11083	5M2894	WASHER,FLAT........................... UOC:V53	36
48	PAHZZ	11083	3S1284	RING................................... UOC:V53	1
49	PFHZZ	11083	3S1282	RING................................... UOC:V53	1
50	XDHZZ	11083	2P9193	PISTON,CLUTCH......................... UOC:V53	1

END OF FIGURE

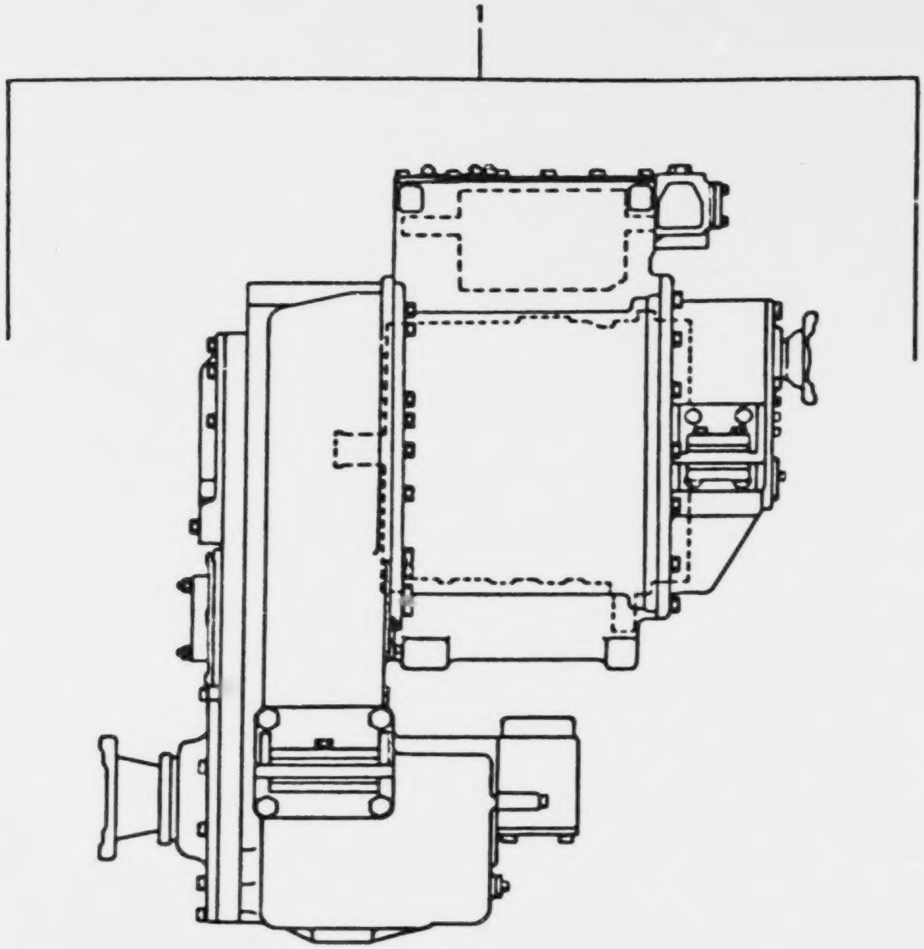

FIGURE 99. TRANSMISSION ARRANGEMENT

(1) ITEM NO	(2) SMR CODE	(3) CAGEC	(4) PART NUMBER	(5) DESCRIPTION AND USABLE ON CODES(UOC)	(6) QTY
				GROUP 0710: TRANSMISSION ASSEMBLY (HYDRAULIC)	
				FIG. 99 TRANSMISSION ARRANGEMENT	
1	PBFHH	11083	3P9094	TRANSMISSION,HYDRAU.................. UOC:V53	1

END OF FIGURE

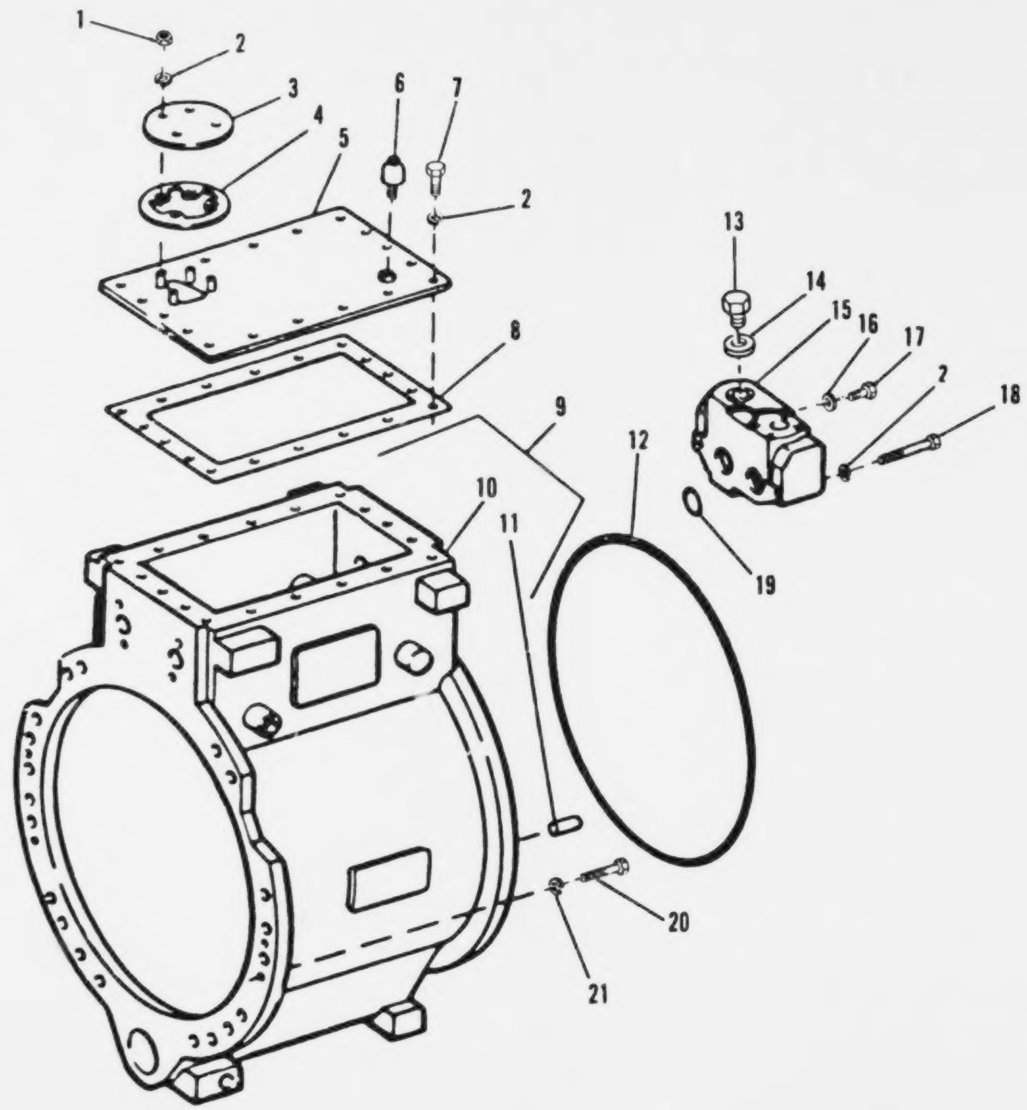

FIGURE 100. TRANSMISSION CASE ASSEMBLY

(1) ITEM NO	(2) SMR CODE	(3) CAGEC	(4) PART NUMBER	(5) DESCRIPTION AND USABLE ON CODES(UOC)	(6) QTY
				GROUP 0710: TRANSMISSION ASSEMBLY (HYDRAULIC)	
				FIG. 100 TRANSMISSION CASE ASSEMBLY	
1	PAHZZ	15564	1377A	NUT,PLAIN,HEXAGON.................... UOC:V53	4
2	PAHZZ	96906	MS35338-45	WASHER,LOCK........................ UOC:V53	25
3	XDHZZ	11083	3S1372	COVER............................ UOC:V53	1
4	PAHZZ	11083	3S1373	GASKET........................... UOC:V53	1
5	XDHZZ	11083	3P3596	COVER ASSY,XMSN.................. UOC:V53	1
6	PAOZZ	55355	1577AL	BREATHER......................... UOC:V53	1
7	PAHZZ	11083	0S1594	BOLT,MACHINE..................... UOC:V53	18
8	PAHZZ	11083	3P3461	GASKET........................... UOC:V53	1
9	XDFHH	11083	7G7135	CASE ASSY,XMSN................... UOC:V53	1
10	XAHZZ	11083	7G7134	.CASE............................ UOC:V53	1
11	PBHZZ	11083	1A2223	.PIN,STRAIGHT,HEADLE............. UOC:V53	2
12	PAHZZ	11083	5P2587	PACKING,PREFORMED................ UOC:V53	1
13	PBHZZ	11083	9S4183	PLUG,ASSEMBLY.................... UOC:V53	1
14	PAHZZ	99517	A180-115MILP2573 2	PACKING,PREFORMED................ UOC:V53	1
15	XDHZZ	11083	3P9922	MANIFOLD......................... UOC:V53	1
16	PAHZZ	25184	906-737-70	PACKING,PREFORMED................ UOC:V53	2
17	PBHZZ	11083	9S4191	PLUG,MACHINE THREAD.............. UOC:V53	2
18	PAHZZ	11083	2M3403	BOLT,MACHINE..................... UOC:V53	3
19	PAHZZ	11083	8M4986	PACKING,PREFORMED................ UOC:V53	2
20	PAHZZ	11083	S1587	BOLT,MACHINE..................... UOC:V53	2
21	PAHZZ	96906	MS35338-48	WASHER,LOCK...................... UOC:V53	2

END OF FIGURE

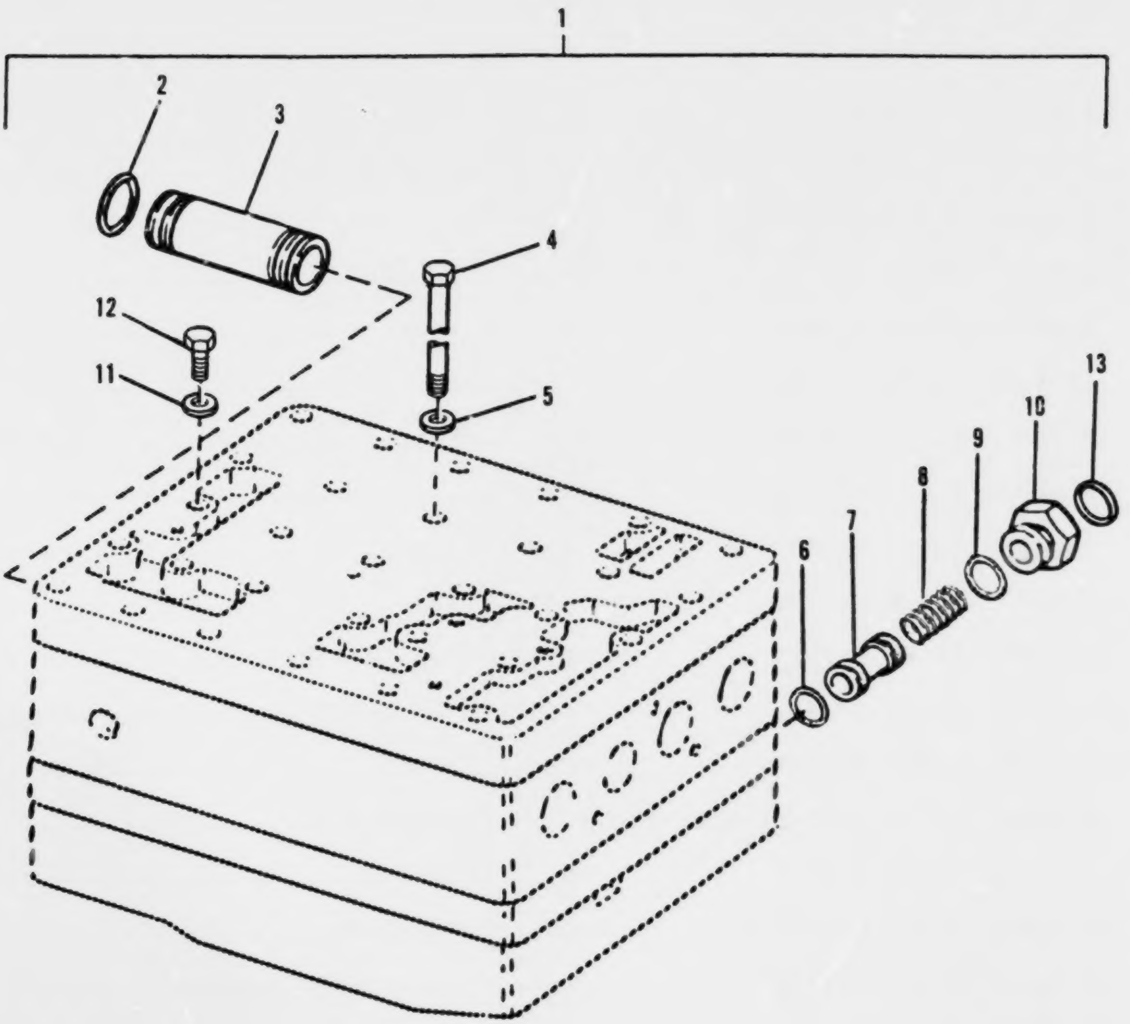

FIGURE 101. TRANSMISSION CONTROL ASSEMBLY

(1) ITEM NO	(2) SMR CODE	(3) CAGEC	(4) PART NUMBER	(5) DESCRIPTION AND USABLE ON CODES(UOC)	(6) QTY
				GROUP 0710: TRANSMISSION ASSEMBLY (HYDRAULIC)	
				FIG. 101 TRANSMISSION CONTROL ASSEMBLY	
1	XDFHH	11083	6P5139	CONTROL,XMSN HYD...................... UOC:V53	1
2	PAHZZ	11083	8M4432	.PACKING,PREFORMED.................. UOC:V53	4
3	PBHZZ	11083	6P4977	.BUSHING,SLEEVE..................... UOC:V53	2
4	PAHZZ	11083	6B1557	.BOLT,MACHINE....................... UOC:V53	4
5	PAHZZ	11083	5M2894	.WASHER,FLAT........................ UOC:V53	4
6	PAHZZ	11083	3P647	.PACKING,PREFORMED.................. UOC:V53	2
7	XDHZZ	11083	6P4979	.SLEEVE............................. UOC:V53	1
8	PAHZZ	11083	4B8710	.SPRING,HELICAL,COMP................ UOC:V53	1
9	PAHZZ	99517	A180-115MILP25732	.PACKING,PREFORMED.................. UOC:V53	1
10	PAHZZ	11083	6P4975	.ADAPTER BUSHING.................... UOC:V53	1
11	PFHZZ	18876	8519718	.WASHER,FLAT........................ UOC:V53	1
12	PAHZZ	11083	8L5922	.BOLT,SELF-LOCKING.................. UOC:V53	1
13	PAHZZ	11083	3J7354	.PACKING,PREFORMED.................. UOC:V53	1

END OF FIGURE

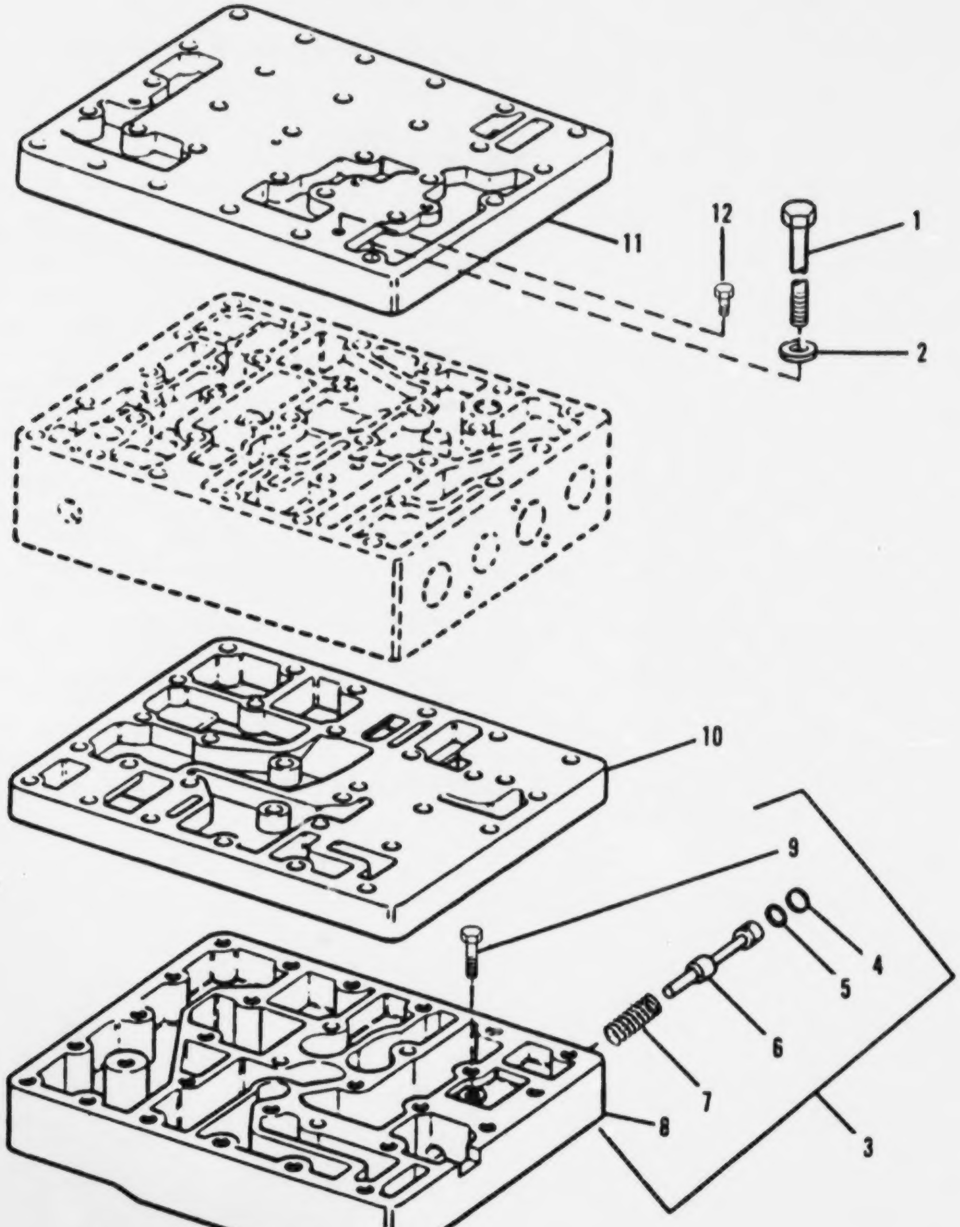

FIGURE 102. NEUTRALIZER VALVE ASSEMBLY

(1) ITEM NO	(2) SMR CODE	(3) CAGEC	(4) PART NUMBER	(5) DESCRIPTION AND USABLE ON CODES(UOC)	(6) QTY
				GROUP 0710: TRANSMISSION ASSEMBLY (HYDRAULIC)	
				FIG. 102 NEUTRALIZER VALVE ASSEMBLY	
1	XDHZZ	11083	5L1761	BOLT,MACHINE........................ UOC:V53	26
2	PAHZZ	11083	9M1974	WASHER,FLAT......................... UOC:V53	26
3	XDHHH	11083	6P5141	VALVE GRP,NEUTRAL................... UOC:V53	1
4	PAHZZ	11083	6P4973	.PACKING,PREFORMED.................. UOC:V53	1
5	PAHZZ	11083	5H8853	.PACKING,PREFORMED.................. UOC:V53	1
6	XAHZZ	11083	6P4969	.SPOOL.............................. UOC:V53	1
7	PAHZZ	11083	8P1556	.SPRING,HELICAL,COMP................ UOC:V53	1
8	XAHZZ	11083	6P4501	.MANIFOLD........................... UOC:V53	1
9	PAHZZ	11083	1K6978	.BOLT,MACHINE....................... UOC:V53	1
10	XAHZZ	11083	6P4459	PLATE,DIVIDER....................... UOC:V53	1
11	XDHZZ	11083	6P4458	MANIFOLD............................ UOC:V53	1
12	PBHZZ	11083	5M6214	PLUG,PIPE........................... UOC:V53	4

END OF FIGURE

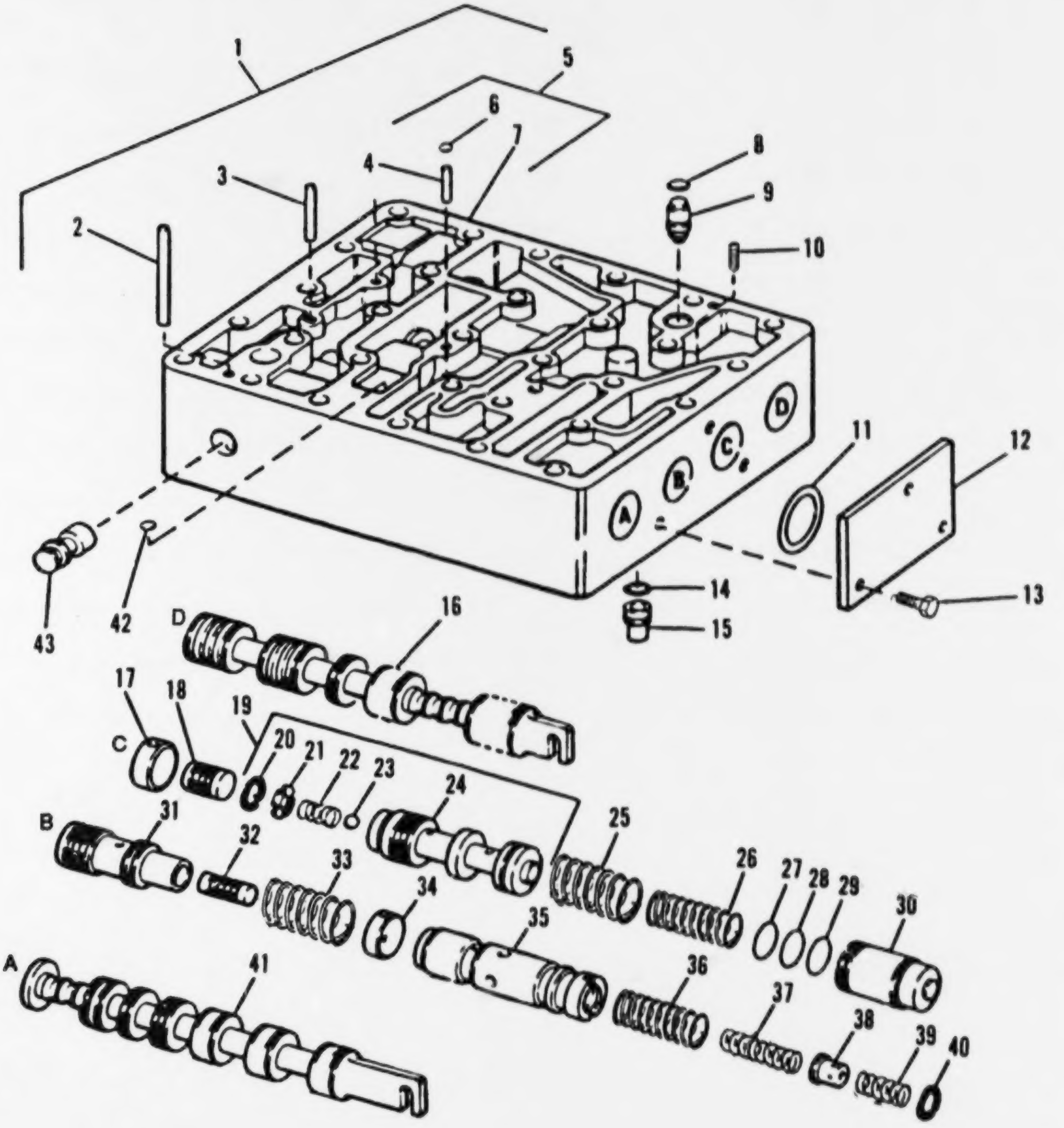

FIGURE 103. SELECTION AND PRESSURE CONTROL VALVE

(1) ITEM NO	(2) SMR CODE	(3) CAGEC	(4) PART NUMBER	(5) DESCRIPTION AND USABLE ON CODES(UOC)	(6) QTY
				GROUP 0710: TRANSMISSION ASSEMBLY (HYDRAULIC)	
				FIG. 103 SELECTION AND PRESSURE CONTROL VALVE	
1	XBHHH	11083	7G9570	VALVE GRP,SEL&PRESS.................. UOC:V53	1
2	PAHZZ	11083	1J5353	.PIN,STRAIGHT,HEADLE.............. UOC:V53	2
3	PAHZZ	11083	8P6321	.PIN,STRAIGHT,HEADLE.............. UOC:V53	1
4	PAHZZ	11083	2S696	.DOWEL............................ UOC:V53	2
5	XAHHH	11083	7G9565	.HOUSING,MECHANICAL............... UOC:V53	1
6	PAHZZ	11083	7G9562	..PLUG,EXPANSION.................. UOC:V53	1
7	XAHZZ	11083	7G9564	..BODY,PRESS SEL.................. UOC:V53	1
8	PAHZZ	11083	1P8116	.PACKING,PREFORMED................ UOC:V53	4
9	PBHZZ	11083	7S4607	.DETENT ASSEMBLY.................. UOC:V53	4
10	PAHZZ	11083	2H2995	.SETSCREW......................... UOC:V53	1
11	PAHZZ	11083	6F6673	.PACKING,PREFORMED................ UOC:V53	2
12	PAHZZ	11083	6P4938	.COVER,ACCESS..................... UOC:V53	1
13	PAHZZ	96906	MS90728-33	.BOLT,MACHINE..................... UOC:V53	3
14	PAHZZ	11083	5H8853	.PACKING,PREFORMED................ UOC:V53	1
15	XDHZZ	11083	9P5476	.ORIFICE,SCREEN................... UOC:V53	1
16	XDHZZ	11083	6P4935	.SPOOL,SP SEL..................... UOC:V53	1
17	PAHZZ	11083	6P4940	.SPACER,SLEEVE.................... UOC:V53	1
18	PAHZZ	11083	2M7041	.SLUG............................. UOC:V53	1
19	PBHZZ	11083	7G4291	.VALVE,RELIEF,PRESSU.............. UOC:V53	1
20	PAHZZ	96906	MS16625-1062	..RING,RETAINING.................. UOC:V53	1
21	PAHZZ	11083	8M1013	..RETAINER........................ UOC:V53	1
22	PAHZZ	11083	4M2381	..SPRING,SPECIAL.................. UOC:V53	1
23	PAHZZ	11083	4B9880	..BALL,BEARING.................... UOC:V53	1

(1) ITEM NO	(2) SMR CODE	(3) CAGEC	(4) PART NUMBER	(5) DESCRIPTION AND USABLE ON CODES(UOC)	(6) QTY
24	XAHZZ	11083	7G4030	..SPOOL,RELIEF........................ UOC:V53	1
25	PAHZZ	11083	7G4842	.SPRING,HELICAL COMP................. UOC:V53	1
26	PAHZZ	11083	9P3041	.SPRING,HELICAL,COMP................. UOC:V53	1
27	PBHZZ	11083	5M9622	.SPACER,PLATE........................ UOC:V53	1
28	PFHZZ	11083	5M9623	.WASHER BLANK........................ UOC:V53	1
29	PBHZZ	11083	5M9624	.SPACER.............................. UOC:V53	1
30	XDHZZ	11083	6P4939	.PISTON.............................. UOC:V53	1
31	PFHZA	11083	6P4943	.SPOOL,RATIO......................... UOC:V53	1
32	PBHZZ	11083	5S7816	.SLUG................................ UOC:V53	1
33	PAHZZ	11083	6P4978	.SPRING,HELICAL,COMP................. UOC:V53	1
34	PBHZZ	11083	2S4872	.STOP................................ UOC:V53	1
35	PBHZZ	11083	7G9563	.SPOOL,SELECTOR VALV................. UOC:V53	1
36	PAHZZ	11083	6P9784	.SPRING,HELICAL,COMP................. UOC:V53	1
37	PAHZZ	11083	6P9783	.SPRING,HELICAL,COMP................. UOC:V53	1
38	PAHZZ	11083	6P9786	.SEAT,HELICAL COMPRE................. UOC:V53	1
39	PAHZZ	11083	6P9785	.SPRING,HELICAL,COMP................. UOC:V53	1
40	PAHZZ	72800	NAN68	.RING,RETAINING...................... UOC:V53	1
41	PBHZZ	11083	7G2546	.SLIDE,DIRECTIONAL C................. UOC:V53	1
42	PBHZZ	19207	7373635	.PLUG,EXPANSION...................... UOC:V53	1
43	PAHZZ	11083	6P4971	.SLIDE,DIRECTIONAL C................. UOC:V53	2

END OF FIGURE

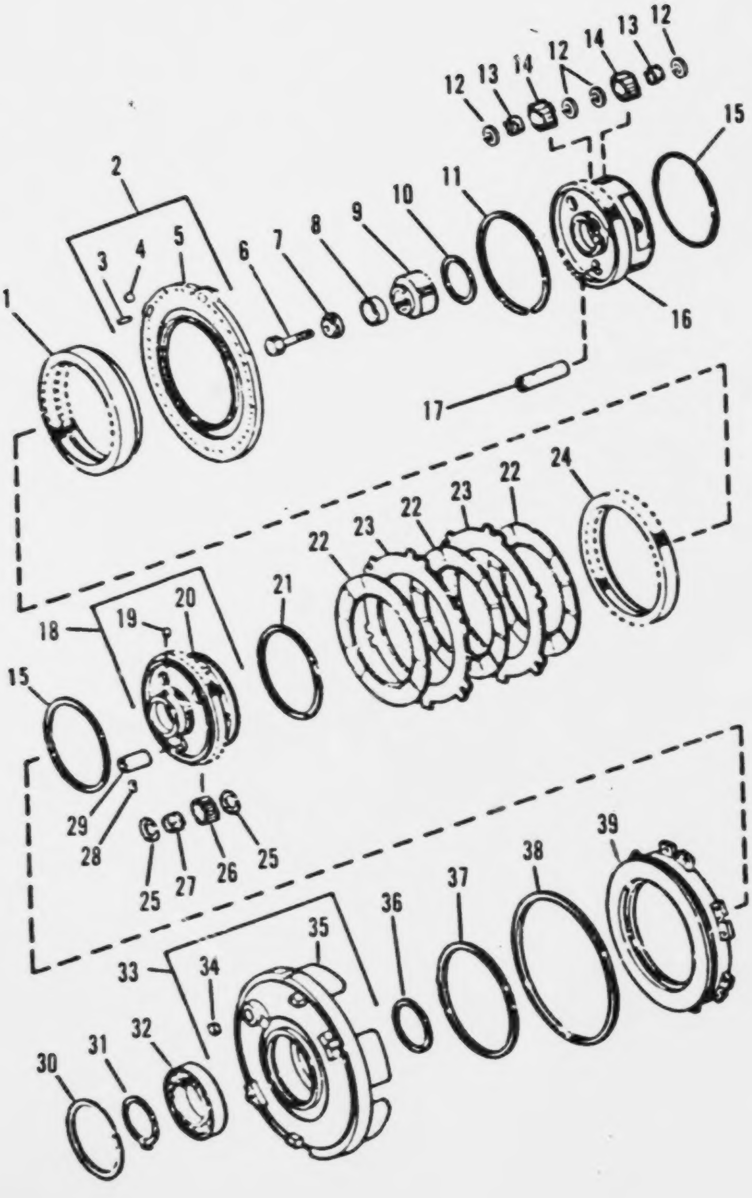

FIGURE 104. PLANETARY GEARS (NO. 1CLUTCH)

(1) ITEM NO	(2) SMR CODE	(3) CAGEC	(4) PART NUMBER	(5) DESCRIPTION AND USABLE ON CODES(UOC)	(6) QTY
				GROUP 0710: TRANSMISSION ASSEMBLY (HYDRAULIC), (HYDRAMATIC), (HYDROSTATIC), (TORQUMATIC), (ALLISON), AND ASSOCIATED PARTS	
				FIG. 104 PLANETARY GEARS (NO. 1 CLUTCH)	
1	PBHZZ	11083	3P3418	GEAR,SPUR............................ UOC:V53	1
2	XDHHH	11083	3P3737	PLATE ASSY........................... UOC:V53	1
3	PBHZZ	11083	7M8479	.PIN,STRAIGHT,HEADLE................. UOC:V53	2
4	XDHZZ	11083	2J8466	.BALL................................ UOC:V53	2
5	XAHZZ	11083	3P3097	.PLATE,CTR........................... UOC:V53	1
6	PAHZZ	11083	L2315	SCREW,CAP,HEXAGON H.................. UOC:V53	1
7	XDHZZ	11083	7G2928	PLATE,RTAR........................... UOC:V53	1
8	XDHZZ	11083	3P4051	SPACER............................... UOC:V53	1
9	XDHZZ	11083	3P2983	GEAR,SUN............................. UOC:V53	1
10	XDHZZ	11083	9F3788	SEAL RING,METAL...................... UOC:V53	1
11	XDHZZ	11083	3P3708	RING,LOCK............................ UOC:V53	1
12	XDHZZ	11083	7G0897	WASHER,FLAT.......................... UOC:V53	12
13	PBHZZ	11083	5M7925	RETAINER AND ROLLER.................. UOC:V53	6
14	XDHZZ	11083	7G3457	GEAR,PLANET.......................... UOC:V53	6
15	XDHZZ	11083	3P3321	SEAL RING,METAL...................... UOC:V53	2
16	XDHZZ	11083	3P2684	CARRIER,PLANET....................... UOC:V53	1
17	XDHZZ	11083	3P3245	SHAFT,PLANET......................... UOC:V53	3
18	XDHHH	11083	3P3739	CARRIER ASSY......................... UOC:V53	1
19	PBHZZ	11083	4S8537	.DOWEL............................... UOC:V53	1
20	XAHZZ	11083	3P2683	.CARRIER,PLANET...................... UOC:V53	1
21	XDHZZ	11083	8P4617	SEAL RING,METAL...................... UOC:V53	1
22	PBHZZ	11083	9G5287	DISK,CLUTCH.......................... UOC:V53	8

(1) ITEM NO	(2) SMR CODE	(3) CAGEC	(4) PART NUMBER	(5) DESCRIPTION AND USABLE ON CODES(UOC)	(6) QTY
23	XDHZZ	11083	3P7447	PLATE,CLUTCH........................ UOC:V53	9
24	XDHZZ	11083	3P2810	GEAR,RING........................... UOC:V53	1
25	PAHZZ	11083	7G899	BEARING,WASHER,THRU................. UOC:V53	6
26	PBHZZ	11083	7G3458	GEAR,INTERNAL....................... UOC:V53	3
27	PAHZZ	11083	1P3958	BEARING,ROLLER,NEED................. UOC:V53	3
28	PAHZZ	11083	3S2708	PIN................................. UOC:V53	13
29	PBHZZ	11083	3P3246	PIN,HOLLOW.......................... UOC:V53	3
30	PAHZZ	72800	7948	RING,RETAINING...................... UOC:V53	3
31	PAHZZ	96906	MS16624-1450	RING,RETAINING...................... UOC:V53	2
32	PAHZZ	11083	4S8546	BEARING,BALL........................ UOC:V53	3
33	XDHFF	11083	6P7392	HOUSING ASSY,CLUTCH................. UOC:V53	1
34	PBHZZ	11083	9S1343	.PLUG,EXPANSION..................... UOC:V53	1
35	XAHZZ	11083	3P2760	.HOUSING,CLUTCH..................... UOC:V53	1
36	PBHZZ	11083	6F0156	RING,PISTON......................... UOC:V53	1
37	PAHZZ	11083	3P2795	SEAL,PLAIN.......................... UOC:V53	1
38	PAHZZ	11083	3P2793	SEAL,PLAIN.......................... UOC:V53	1
39	XDHZZ	11083	3P9367	PISTON,CLUTCH....................... UOC:V53	1

END OF FIGURE

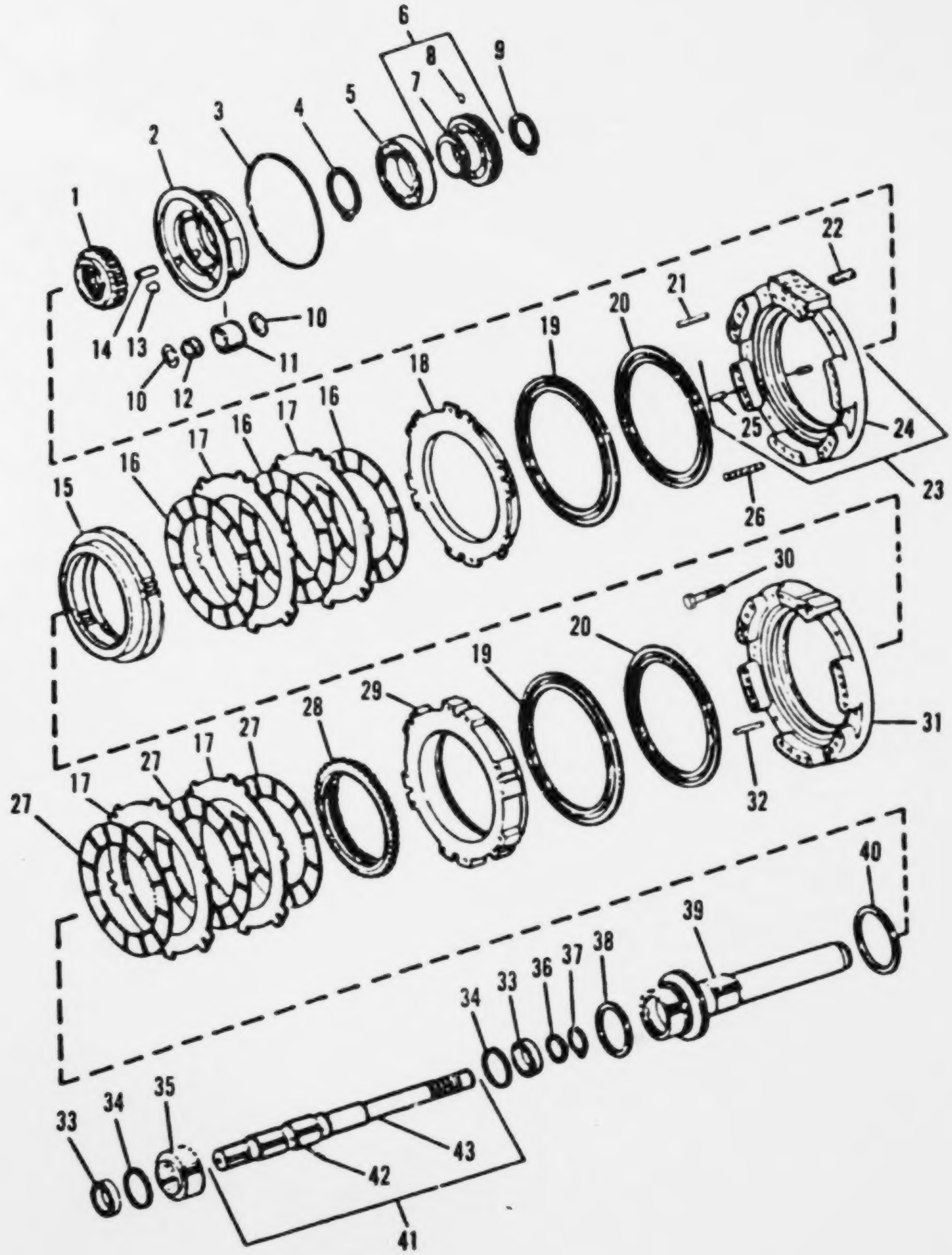

FIGURE 105. PLANETARY GEARS (NO. 2 AND 3 CLUTCH)

(1) ITEM NO	(2) SMR CODE	(3) CAGEC	(4) PART NUMBER	(5) DESCRIPTION AND USABLE ON CODES(UOC)	(6) QTY
				GROUP 0710: TRANSMISSION ASSEMBLY (HYDRAUIC), (HYDRAMATIC), (HYDRO-STATIC), (TORQUMATIC), (ALLISON), AND ASSOCIATED PARTS	
				FIG. 105 PLANETARY GEARS (NO. 2 AND 3 CLUTCH)	
1	XDHZZ	11083	3P3096	GEAR,SUN........................... UOC:V53	1
2	XDHZZ	11083	3P2759	CARRIER,PLANET..................... UOC:V53	1
3	XDHZZ	11083	3P3707	RING,LOCK.......................... UOC:V53	1
4	PAHZZ	96906	MS16624-1450	RING,RETAINING..................... UOC:V53	2
5	PAHZZ	11083	4S8546	BEARING,BALL....................... UOC:V53	3
6	XDHHH	11083	6P5554	HUB ASSY........................... UOC:V53	1
7	XAHZZ	11083	6P3153	.HUB............................... UOC:V53	1
8	PBHZZ	11083	4S8537	.DOWEL............................. UOC:V53	1
9	PAHZZ	96906	MS16624-1362	RING,RETAINING..................... UOC:V53	1
10	PAHZZ	11083	7G0894	BEARING,WASHER,THRU................ UOC:V53	14
11	PFHZZ	11083	7G2476	GEAR,SPUR.......................... UOC:V53	3
12	PBHZZ	11083	5M6126	RETAINER AND ROLLER................ UOC:V53	3
13	PAHZZ	11083	3S2708	PIN................................ UOC:V53	13
14	XDHZZ	11083	3S8038	SHAFT,PLANET....................... UOC:V53	3
15	XDHZZ	11083	3P3098	GEAR,RING.......................... UOC:V53	1
16	PAHZZ	11083	9G5287	DISK,CLUTCH........................ UOC:V53	3
17	XDHZZ	11083	3P7447	PLATE,CLUTCH....................... UOC:V53	9
18	XDHZZ	11083	3P2685	PISTON,CLUTCH...................... UOC:V53	3
19	PAHZZ	11083	3P2793	SEAL,PLAIN......................... UOC:V53	5
20	XDHZZ	11083	3P2794	SEAL RING,INT,PLSTC................ UOC:V53	4
21	PAHZZ	11083	9H5546	PIN................................ UOC:V53	6
22	PAHZZ	11083	9M4355	DAMPER,BOLT,TRANSMI................ UOC:V53	20

(1) ITEM NO	(2) SMR CODE	(3) CAGEC	(4) PART NUMBER	(5) DESCRIPTION AND USABLE ON CODES(UOC)	(6) QTY
23	XDHHH	11083	3P3738	HOUSING ASSY........................... UOC:V53	1
24	XAHZZ	11083	3P2413	.HOUSING,CLUTCH........................ UOC:V53	1
25	PBHZZ	11083	7M8480	.PIN,STRAIGHT,HEADLE................. UOC:V53	4
26	PAHZZ	11083	2P5755	SPRING,HELICAL,COMP................ UOC:V53	12
27	PAHZZ	11083	9G5287	DISK,CLUTCH........................... UOC:V53	3
28	XDHZZ	11083	3P3180	GEAR,RING.............................. UOC:V53	2
29	XDHZZ	11083	3P9366	PISTON,CLUTCH......................... UOC:V53	1
30	PAHZZ	96906	MS90728-78	SCREW,CAP,HEXAGON H................ UOC:V53	2
31	XDHZZ	11083	3P2414	HOUSING,CLUTCH,FWD.................. UOC:V53	1
32	PAHZZ	11083	9M1990	PIN,STRAIGHT,HEADLE................. UOC:V53	6
33	XDHZZ	11083	5P0546	BEARING,SPL BALL..................... UOC:V53	2
34	PAHZZ	80756	RRT393	RING,RETAINING....................... UOC:V53	2
35	XDHZZ	11083	3P3059	GEAR,SUN................................ UOC:V53	1
36	XDHZZ	11083	8P1419	SPACER................................... UOC:V53	1
37	PAHZZ	96906	MS16624-1255	RING,RETAINING....................... UOC:V53	1
38	PAHZZ	11083	5M6187	SEAL...................................... UOC:V53	1
39	XDHZZ	11083	3P4054	SHAFT ASSY,OUTPUT.................... UOC:V53	1
40	PAHZZ	11083	9M1503	SEAL RING,METAL....................... UOC:V53	1
41	XDHHH	11083	6P1543	SHAFT ASSY,INP........................ UOC:V53	1
42	PBHZZ	11083	9M2001	.PIN,STRAIGHT,HEADLE................. UOC:V53	2
43	XAHZZ	11083	3P3821	SHAFT, XMSN INP.......................	1

END OF FIGURE

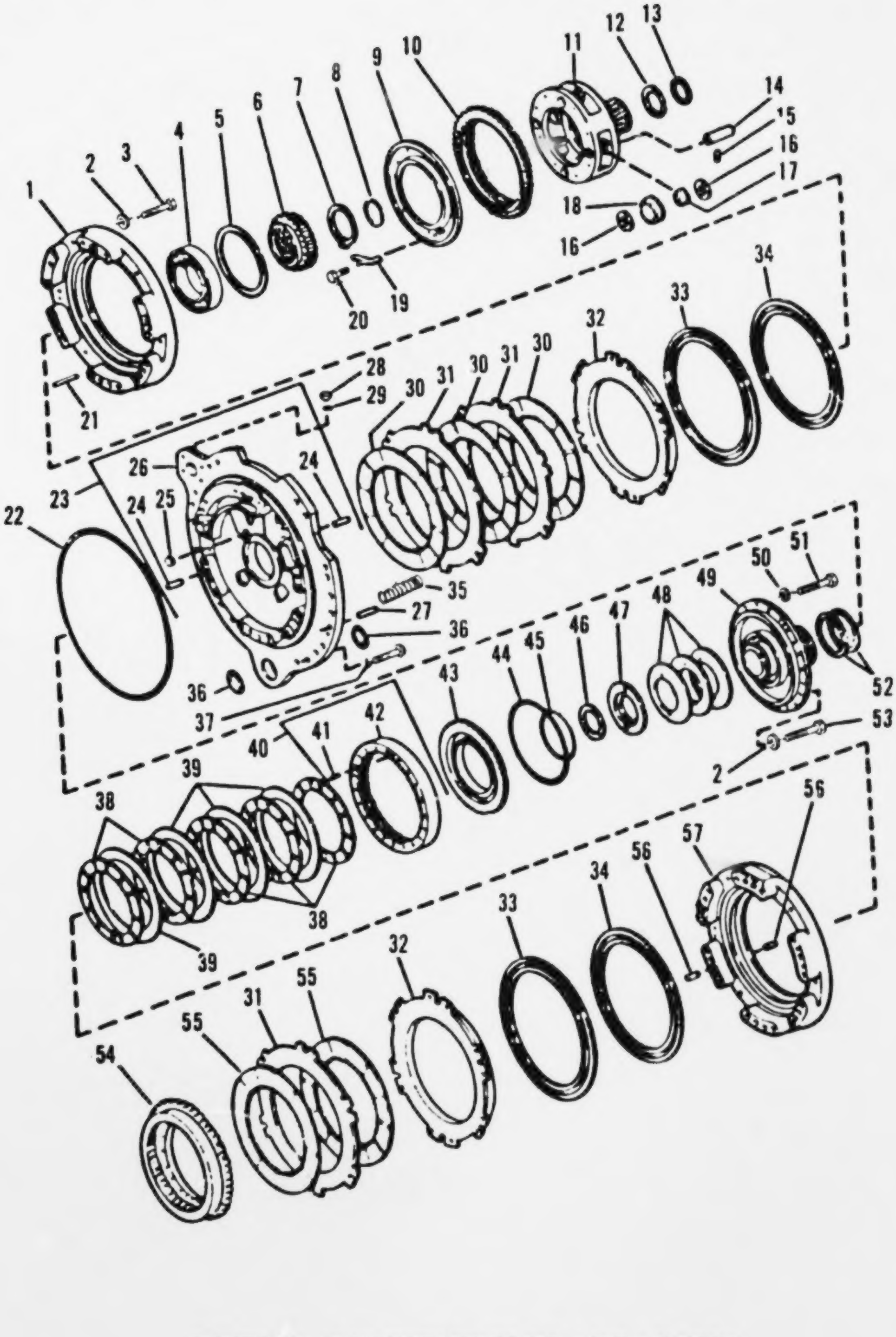

FIGURE 106. PLANETARY GEARS (NO. 4 AND 6 CLUTCH)

(1) ITEM NO	(2) SMR CODE	(3) CAGEC	(4) PART NUMBER	(5) DESCRIPTION AND USABLE ON CODES(UOC)	(6) QTY
				GROUP 0710: TRANSMISSION ASSEMBLY (HYDRAULIC), (HYDRAMATIC), (HYDRO-STATIC), (TORQUMATIC), (ALLISON), AND ASSOCIATED PARTS	
				FIG. 106 PLANETARY GEARS (NO. 4 AND 6 CLUTCH)	
1	XDHZZ	11083	3P2761	HOUSING,CLUTCH........................ UOC:V53	1
2	PAHZZ	11083	5M2894	WASHER,FLAT........................... UOC:V53	38
3	PAHZZ	11083	6J6721	BOLT,MACHINE.......................... UOC:V53	18
4	PAHZZ	11083	4S6546	BEARING,BALL.......................... UOC:V53	3
5	PAHZZ	72800	7948	RING,RETAINING........................ UOC:V53	3
6	XDHZZ	11083	3P3060	GEAR,SUN.............................. UOC:V53	1
7	PBHZZ	96906	MS16624-1425	RING,RETAINING........................ UOC:V53	1
8	XDHZZ	11083	1P0014	RING,LOCK............................. UOC:V53	1
9	XDHZZ	11083	6P5725	SLINGER............................... UOC:V53	1
10	XDHZZ	11083	3P3180	GEAR,RING............................. UOC:V53	2
11	XDHZZ	11083	3P2415	CARRIER,PLANET........................ UOC:V53	1
12	XDHZZ	11083	3P4050	SPACER................................ UOC:V53	1
13	PBHZZ	79136	5100-287MD	RING,RETAINING........................ UOC:V53	1
14	XDHZZ	11083	3P3242	SHAFT,PLANET.......................... UOC:V53	4
15	PAHZZ	11083	3S2708	PIN................................... UOC:V53	13
16	PAHZZ	11083	6T7799	BEARING,WASHER,THRU................... UOC:V53	14
17	PBHZZ	11083	5M2054	RETAINER AND ROLLER................... UOC:V53	8
18	XBHZZ	11083	7G2486	GEAR,PLANET........................... UOC:V53	2
19	PAHZZ	11083	6P5724	LOCKING PLATE,NUT A................... UOC:V53	4
20	PAHZZ	11083	3H6591	SCREW,CAP,HEXAGON H................... UOC:V53	8
21	PFHZZ	11083	1S9989	PIN,STRAIGHT,HEADLE................... UOC:V53	6
22	PAHZZ	11083	2D8363	SEAL,PLAIN............................ UOC:V53	1

(1) ITEM NO	(2) SMR CODE	(3) CAGEC	(4) PART NUMBER	(5) DESCRIPTION AND USABLE ON CODES(UOC)	(6) QTY
23	XDHHH	11083	7G7139	MANIFOLD ASSY......................... UOC:V53	1
24	PBHZZ	11083	7M8480	.PIN,STRAIGHT,HEADLE................. UOC:V53	4
25	PAHZZ	11083	4K86C3	.PLUG............................... UOC:V53	1
26	XAHZZ	11083	7G7138	.MANIFOLD........................... UOC:V53	1
27	PAHZZ	11083	3F3442	.PIN,STRAIGHT,HEADLE................. UOC:V53	1
28	PBHZZ	11083	9S4191	PLUG,MACHINE THREAD.................. UOC:V53	1
29	PAHZZ	25184	906-737-70	PACKING,PREFORMED.................... UOC:V53	1
30	PAHZZ	11083	9G5287	DISK,CLUTCH.......................... UOC:V53	3
31	XDHZZ	11083	3P7447	PLATE,CLUTCH......................... UOC:V53	9
32	XDHZZ	11083	3P2685	PISTON,CLUTCH........................ UOC:V53	3
33	PAHZZ	11083	3P2793	SEAL, PLAIN..........................	5
34	XDHZZ	11083	3P2794	SEAL RING,INT,PLSTC.................. UOC:V53	4
35	PAHZZ	11083	9H5537	SPRING,HELICAL,COMP.................. UOC:V53	36
36	PAHZZ	11083	7F2122	RETAINER,PACKING..................... UOC:V53	2
37	PAHZZ	11083	5J5794	SCREW,CAP,SOCKET HE.................. UOC:V53	2
38	XDHZZ	11083	3P5431	DISC ASSY,CLUTCH..................... UOC:V53	5
39	XDHZZ	11083	3P7489	PLATE,CLUTCH......................... UOC:V53	4
40	XDHHH	11083	6P7379	HOUSING ASSY......................... UOC:V53	1
41	PBHZZ	11083	8B1312	.PIN,STRAIGHT,HEADLE................. UOC:V53	3
42	XAHZZ	11083	6P5752	.HOUSING,ROTATING.................... UOC:V53	1
43	XDHZZ	11083	3P2768	PISTON,CLUTCH........................ UOC:V53	1
44	PAHZZ	11083	3P2792	SEAL,PLAIN........................... UOC:V53	1
45	PBHZZ	11083	1P9261	RING................................. UOC:V53	1
46	XDHZZ	80756	RST400	RING,RTNG,EXT........................ UOC:V53	1
47	XDHZZ	11083	3P3304	PLATE,RTNR........................... UOC:V53	1
48	XDHZZ	11083	3P3635	SPRING,CONED DISC.................... UOC:V53	3
49	XDHZZ	11083	3P3735	HOUSING ASSY.........................	1

(1) ITEM NO	(2) SMR CODE	(3) CAGEC	(4) PART NUMBER	(5) DESCRIPTION AND USABLE ON CODES(UOC)	(6) QTY
				UOC:V53	
50	PFFZZ	11083	2M845	WASHER,FLAT.......................... UOC:V53	2
51	PAHZZ	11083	8S6212	BOLT,MACHINE......................... UOC:V53	2
52	XDHZZ	11083	3P3673	RING,SEAL............................ UOC:V53	2
53	PAHZZ	11083	2M3403	BOLT,MACHINE......................... UOC:V53	20
54	XDHZZ	11083	6P5751	GEAR,RING............................ UOC:V53	1
55	PAHZZ	11083	9G5287	DISK,CLUTCH.......................... UOC:V53	3
56	PBHZZ	11083	7M8480	PIN,STRAIGHT,HEADLE.................. UOC:V53	4
57	XDHZZ	11083	3P2751	HOUSING,CLUTCH....................... UOC:V53	1

END OF FIGURE

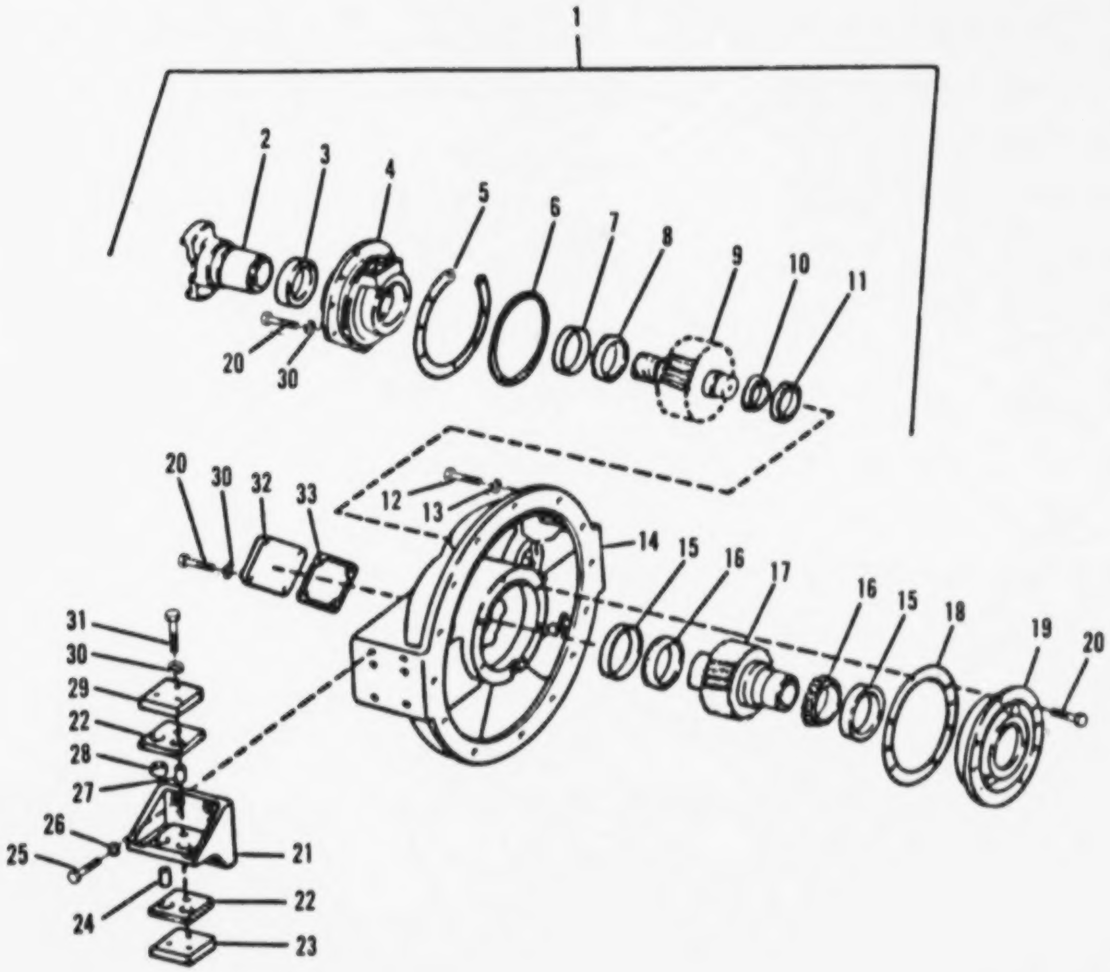

FIGURE 107. INPUT TRANSFER GEARS

(1) ITEM NO	(2) SMR CODE	(3) CAGEC	(4) PART NUMBER	(5) DESCRIPTION AND USABLE ON CODES(UOC)	(6) QTY
				GROUP 0710: TRANSMISSION ASSEMBLY (HYDRAULIC), (HYDRAMATIC), (HYDRO-STATIC), (TORQUMATIC), (ALLISON), AND ASSOCIATED PARTS	
				FIG. 107 INPUT TRANSFER GEARS	
1	XDHHH	11083	3P3473	GEAR GRP,INP,XFR..................... UOC:V53	1
2	XDHZZ	11083	1P7522	.YOKE ASSY........................... UOC:V53	1
3	PAHZZ	11083	4K7463	.SEAL,PLAIN ENCASED.................. UOC:V53	1
4	XDHZZ	11083	3P3349	.CAGE................................ UOC:V53	1
5	PAHZZ	11083	3P3495	.SHIM................................ UOC:V53	1
6	PAHZZ	11083	2K8257	.PACKING,PREFORMED................... UOC:V53	1
7	PAHZZ	11083	6B3224	.CUP,TAPERED ROLLER.................. UOC:V53	1
8	PAHZZ	11083	4B7255	.CONE AND ROLLERS,TA................. UOC:V53	1
9	PBHZZ	11083	3P6037	.GEAR,HELICAL........................ UOC:V53	1
10	PAHZZ	11083	3N6412	.CONE AND ROLLERS,TA................. UOC:V53	1
11	PAHZZ	11083	3N6411	.CUP,TAPERED ROLLER.................. UOC:V53	1
12	PAHZZ	96906	MS90728-113	.SCREW,CAP,HEXAGON H................. UOC:V53	12
13	PAHZZ	96906	MS35338-48	.WASHER,LOCK......................... UOC:V53	12
14	XDHZZ	11083	3P2408	.CASE,TRANSFER,INPUT................. UOC:V53	1
15	PAHZZ	11083	9S7949	.CUP................................. UOC:V53	2
16	PAHZZ	11083	9S7950	.CONE................................ UOC:V53	2
17	PBHZZ	11083	3P6038	.GEAR,HELICAL........................ UOC:V53	1
18	PAHZZ	11083	3P9658	.SHIM................................ UOC:V53	1
19	PAHZZ	11083	3P9600	.PLATE,RETAINING,BEA................. UOC:V53	1
20	PAHZZ	11083	0S1594	.BOLT,MACHINE........................ UOC:V53	16
21	XDHFF	11083	3P3475	.BRACKET ASSY,MTG.................... UOC:V53	2
22	XDHZZ	11083	3P3499	.PAD,UPPER........................... UOC:V53	4
23	XDHZZ	11083	3P3501	.PLATE,LOWER.........................	2

(1) ITEM NO	(2) SMR CODE	(3) CAGEC	(4) PART NUMBER	(5) DESCRIPTION AND USABLE ON CODES(UOC)	(6) QTY
				UOC:V53	
24	XDHZZ	11083	3P3567	.SLEEVE................................ UOC:V53	4
25	PAHZZ	96906	MS90728-163	.SCREW,CAP,HEXAGON H................ UOC:V53	8
26	PAHZZ	96906	MS35340850	.WASHER,LOCK......................... UOC:V53	8
27	XDHZZ	11083	3P3515	.SLEEVE................................ UOC:V53	2
28	XDHZZ	11083	3P3566	.SLEEVE................................ UOC:V53	4
29	XDHZZ	11083	3P3498	.PLATE,UPPER......................... UOC:V53	2
30	PAHZZ	96906	MS35338-45	.WASHER,LOCK......................... UOC:V53	6
31	PAHZZ	11083	L2070	.BOLT,MACHINE....................... UOC:V53	2
32	PAHZZ	11083	2N0822	.COVER,ACCESS....................... UOC:V53	1
33	PAHZZ	11083	3P6061	.GASKET............................... UOC:V53	1

END OF FIGURE

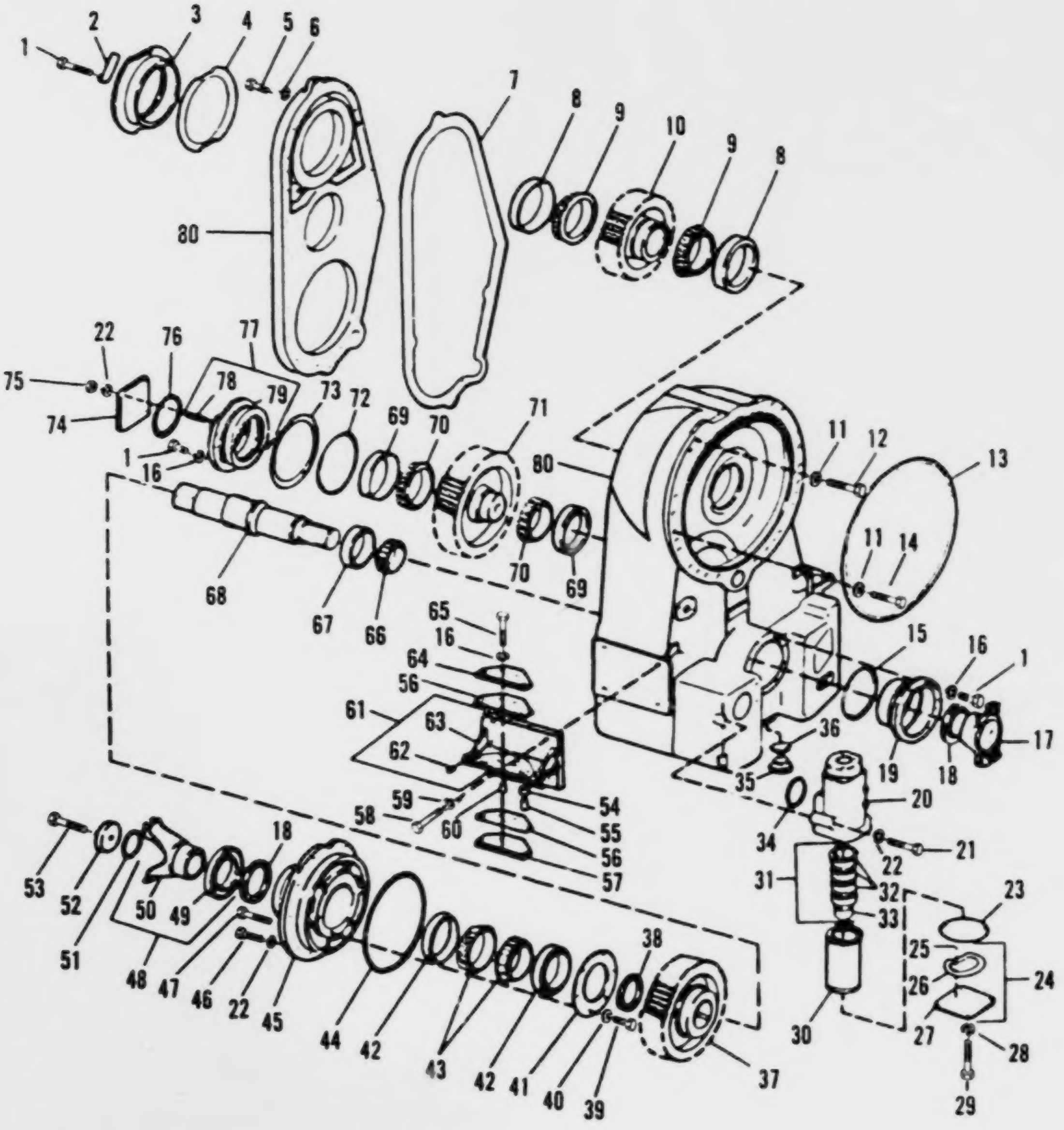

FIGURE 108. OUTPUT TRANSFER GEARS

(1) ITEM NO	(2) SMR CODE	(3) CAGEC	(4) PART NUMBER	(5) DESCRIPTION AND USABLE ON CODES(UOC)	(6) QTY
				GROUP 0710: TRANSMISSION ASSEMBLY (HYDRAULIC), (HYDRAMATIC), (HYDROSTATIC), (TORQUMATIC), (ALLISON) AND ASSOCIATED PARTS	
				FIG. 108 OUTPUT TRANSFER GEARS	
1	PAHZZ	11083	1A2029	BOLT,MACHINE.......................... UOC:V53	23
2	PAHZZ	11083	1A7458	LOCKING PLATE,NUT A................... UOC:V53	4
3	PAHZZ	11083	3P3429	PLATE,RETAINING,BEA................... UOC:V53	1
4	PAHZZ	11083	3P2922	SHIM.................................. UOC:V53	1
5	PAHZZ	11083	2B947	BOLT,MACHINE.......................... UOC:V53	15
6	PAHZZ	96906	MS35338-48	WASHER,LOCK........................... UOC:V53	30
7	PAHZZ	11083	3P2893	GASKET................................ UOC:V53	1
8	PAHZZ	11083	4F2041	CUP,TAPERED ROLLER.................... UOC:V53	2
9	PAHZZ	11083	2D9457	CONE AND ROLLERS,TA................... UOC:V53	2
10	PBHZZ	11083	3P3355	GEAR,SPUR............................. UOC:V53	1
11	PAHZZ	11083	5P8247	WASHER,FLAT........................... UOC:V53	20
12	PAHZZ	11083	1A8651	BOLT,MACHINE.......................... UOC:V53	2
13	PAHZZ	11083	5P2587	SEAL,PLAIN............................ UOC:V53	1
14	PAHZZ	11083	1B4367	BOLT,MACHINE.......................... UOC:V53	18
15	PAHZZ	11083	2K4472	PACKING,PREFORMED..................... UOC:V53	1
16	PAHZZ	96906	MS35338-45	WASHER,LOCK........................... UOC:V53	14
17	PBHZZ	11083	8P514	YOKE,UNIVERSAL JOIN................... UOC:V53	1
18	PAHZZ	11083	2D8540	SEAL,PLAIN ENCASED.................... UOC:V53	2
19	PAHZZ	11083	1P4082	CAGE,BEARING.......................... UOC:V53	1
20	XDHZZ	11083	3P8186	HOUSING,SCREEN........................ UOC:V53	1
21	PAHZZ	11083	1D4566	BOLT,MACHINE.......................... UOC:V53	3
22	PAHZZ	96906	MS35338-48	WASHER,LOCK........................... UOC:V53	3
23	PAOZZ	11083	5F0149	RING..................................	1

(1) ITEM NO	(2) SMR CODE	(3) CAGEC	(4) PART NUMBER	(5) DESCRIPTION AND USABLE ON CODES(UOC)	(6) QTY
				UOC:V53	
24	XDHZZ	11083	6P4903	PLATE ASSY..............................	1
				UOC:V53	
25	PAOZZ	11083	7B3028	.SCREW,DRIVE............................	2
				UOC:V53	
26	PAOZZ	11083	7S2962	.WASHER.................................	1
				UOC:V53	
27	XDHZZ	11083	6P4904	.PLATE..................................	1
				UOC:V53	
28	PAOZZ	96906	MS35338-45	WASHER,LOCK.............................	7
				UOC:V53	
29	PAOZZ	11083	0S1594	BOLT,MACHINE............................	4
				UOC:V53	
30	PBOZZ	11083	4S8598	SCREEN,SUCTION..........................	1
				UOC:V53	
31	PBOZZ	11083	4S8603	TUBE....................................	1
				UOC:V53	
32	PAOZZ	11083	8M7160	.MAGNET.................................	3
				UOC:V53	
33	XAHZZ	11083	4S8602	.TUBE ASSY..............................	1
				UOC:V53	
34	PAHZZ	11083	2H2665	PACKING,PREFORMED.......................	1
				UOC:V53	
35	PBHZZ	11083	4B2363	PLUG,MACHINE THREAD.....................	1
				UOC:V53	
36	PAHZZ	11083	6F4868	GASKET..................................	1
				UOC:V53	
37	PBHZZ	11083	3P3357	GEAR,SPUR...............................	1
				UOC:V53	
38	XDHZZ	11083	1P4078	SPACER..................................	1
				UOC:V53	
39	PAHZZ	11083	2A4639	BOLT,MACHINE............................	6
				UOC:V53	
40	PAHZZ	11083	5M2894	WASHER,FLAT.............................	6
				UOC:V53	
41	XDHZZ	11083	6P4947	RETAINER................................	1
				UOC:V53	
42	PAHZZ	11083	1P7834	CUP.....................................	2
				UOC:V53	
43	PAHZZ	11083	1P7835	CONE....................................	2
				UOC:V53	
44	PAHZZ	11083	5J1086	PACKING,PREFORMED.......................	1
				UOC:V53	
45	PAHZZ	11083	1P4079	RING,BEARING,OUTER......................	1
				UOC:V53	
46	PAHZZ	11083	7B3235	BOLT,MACHINE............................	3
				UOC:V53	
47	PAHZZ	11083	L1329	BOLT,MACHINE............................	8
				UOC:V53	
48	PBHZZ	11083	6P2923	YOKE,UNIVERSAL JOIN.....................	1
				UOC:V53	
49	PBHZZ	11083	3S9880	.CAP,PROTECTIVE,DUST....................	1

(1) ITEM NO	(2) SMR CODE	(3) CAGEC	(4) PART NUMBER	(5) DESCRIPTION AND USABLE ON CODES(UOC)	(6) QTY
				UOC:V53	
50	XAHZZ	11083	3P3504	.YOKE	1
				UOC:V53	
51	PAHZZ	11083	7F2122	RETAINER,PACKING	1
				UOC:V53	
52	XDHZZ	11083	7K1695	RETAINER	1
				UOC:V53	
53	PAOZZ	11083	S1607	BOLT,MACHINE	1
				UOC:V53	
54	XDHZZ	11083	3P3566	SLEEVE	8
				UOC:V53	
55	XDHZZ	11083	3P3567	SLEEVE	8
				UOC:V53	
56	XDHZZ	11083	3P3513	PAD	4
				UOC:V53	
57	XDHZZ	11083	3P3514	PLATE	2
				UOC:V53	
58	PAHZZ	11083	0L1178	BOLT,MACHINE	8
				UOC:V53	
59	PAHZZ	96906	MS35338-51	WASHER,LOCK	8
				UOC:V53	
60	XDHZZ	11083	3P3515	SLEEVE	2
				UOC:V53	
61	XDHHH	11083	3P3506	BRACKET ASSY,MTG	2
				UOC:V53	
62	PAHZZ	11083	1A2223	.PIN,STRAIGHT,HEADLE	2
				UOC:V53	
63	XAHZZ	11083	3P3507	.BRACKET ASSY	1
				UOC:V53	
64	XDHZZ	11083	3P3511	PLATE	2
				UOC:V53	
65	PAHZZ	11083	L2070	BOLT,MACHINE	2
				UOC:V53	
66	PAHZZ	11083	2H6490	RING,BEARING,INNER	1
				UOC:V53	
67	PAHZZ	11083	2H6489	RING,BEARING,OUTER	1
				UOC:V53	
68	PBHZZ	11083	3P3560	SHAFT,SHOULDERED	1
				UOC:V53	
69	PAHZZ	11083	6D7690	RING,BEARING,OUTER	2
				UOC:V53	
70	PAHZZ	60038	HM218248-4-468	CONE AND ROLLER,TA	2
				UOC:V53	
71	PBHZZ	11083	3P3356	GEAR,SPUR	1
				UOC:V53	
72	PAHZZ	11083	7L2181	PACKING,PREFORMED	1
				UOC:V53	
73	PAHZZ	11083	3P3503	SHIM	1
				UOC:V53	
74	XBHZZ	11083	9P1269	COVER	1
				UOC:V53	
75	PAHZZ	96906	MS51967-14	NUT,PLAIN,HEXAGON	4

(1) ITEM NO	(2) SMR CODE	(3) CAGEC	(4) PART NUMBER	(5) DESCRIPTION AND USABLE ON CODES(UOC)	(6) QTY
				UOC:V53	
76	PAHZZ	11083	3F5792	SEAL.................................... UOC:V53	1
77	XDHHZ	11083	3P3556	HOUSING,BEARING UNI................. UOC:V53	1
78	PAHZZ	11083	3D490	.STUD.................................. UOC:V53	4
79	PFHZZ	11083	3P3428	.HOUSING,BEARING UNI................ UOC:V53	1
80	XDHHH	11083	7G7140	CASE ASSY,XFR,OUT................... UOC:V53	1

END OF FIGURE

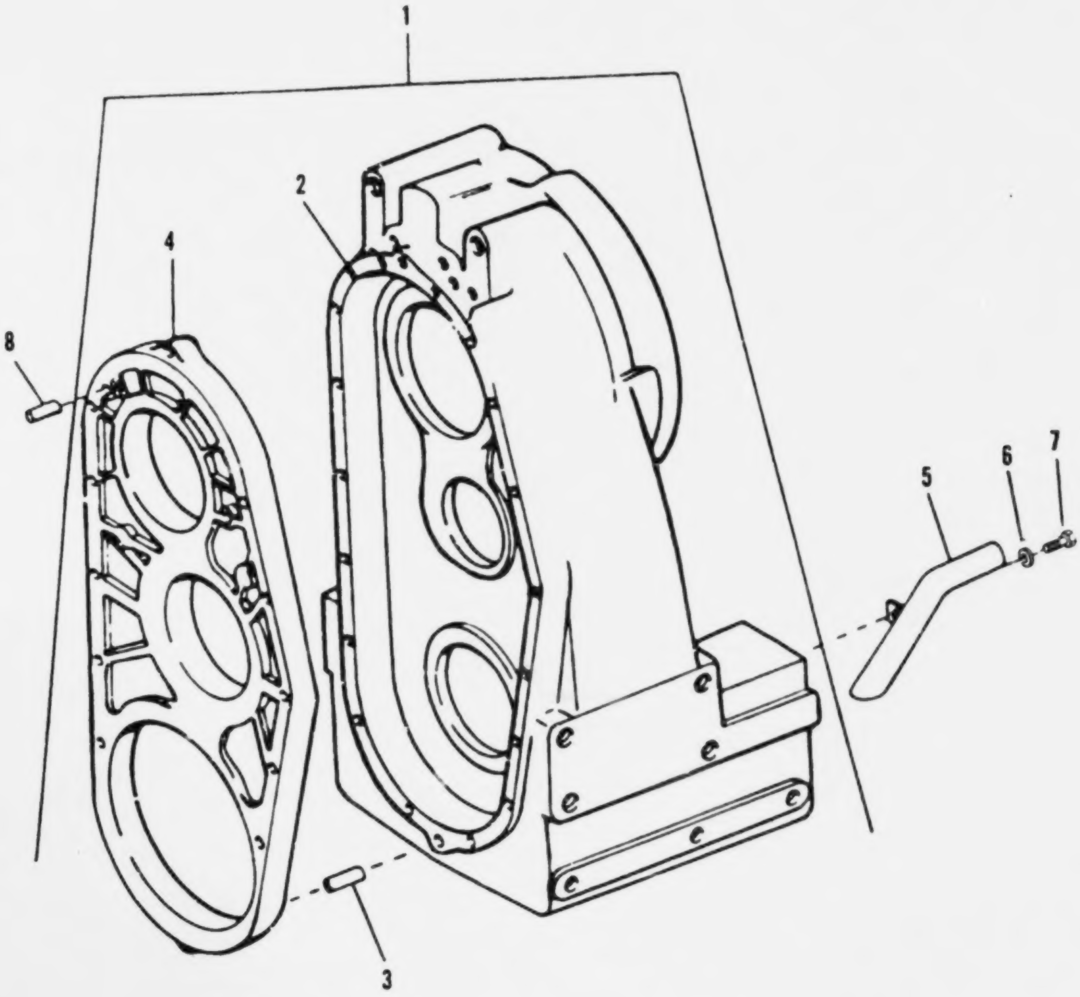

FIGURE 109. TRANSFER CASE ASSEMBLY

(1) ITEM NO	(2) SMR CODE	(3) CAGEC	(4) PART NUMBER	(5) DESCRIPTION AND USABLE ON CODES(UOC)	(6) QTY
				GROUP 0710: TRANSMISSION ASSEMBLY (HYDRAULIC), (HYDRAMATIC), (HYDRO-STATIC), (TORQUMATIC), (ALLISON) AND ASSOCIATED PARTS	
				FIG. 109 TRANSFER CASE ASSEMBLY	
1	XAHZZ	11083	7G7137	CASE ASSY............................ UOC:V53	1
2	XAHZZ	11083	7G7136	.CASE................................ UOC:V53	1
3	PAHZZ	11083	8M8659	.PIN,TRANSFER CASE................... UOC:V53	2
4	XAHZZ	11083	3P2411	.COVER............................... UOC:V53	1
5	XDHZZ	11083	8P8837	TUBE ASSY............................ UOC:V53	1
6	PAHZZ	11083	2S6160	WASHER,FLAT.......................... UOC:V53	1
7	PAHZZ	11083	0S1594	BOLT,MACHINE......................... UOC:V53	1
8	PAHZZ	11083	2A3798	PIN,STRAIGHT,HEADLE.................. UOC:V53	2

END OF FIGURE

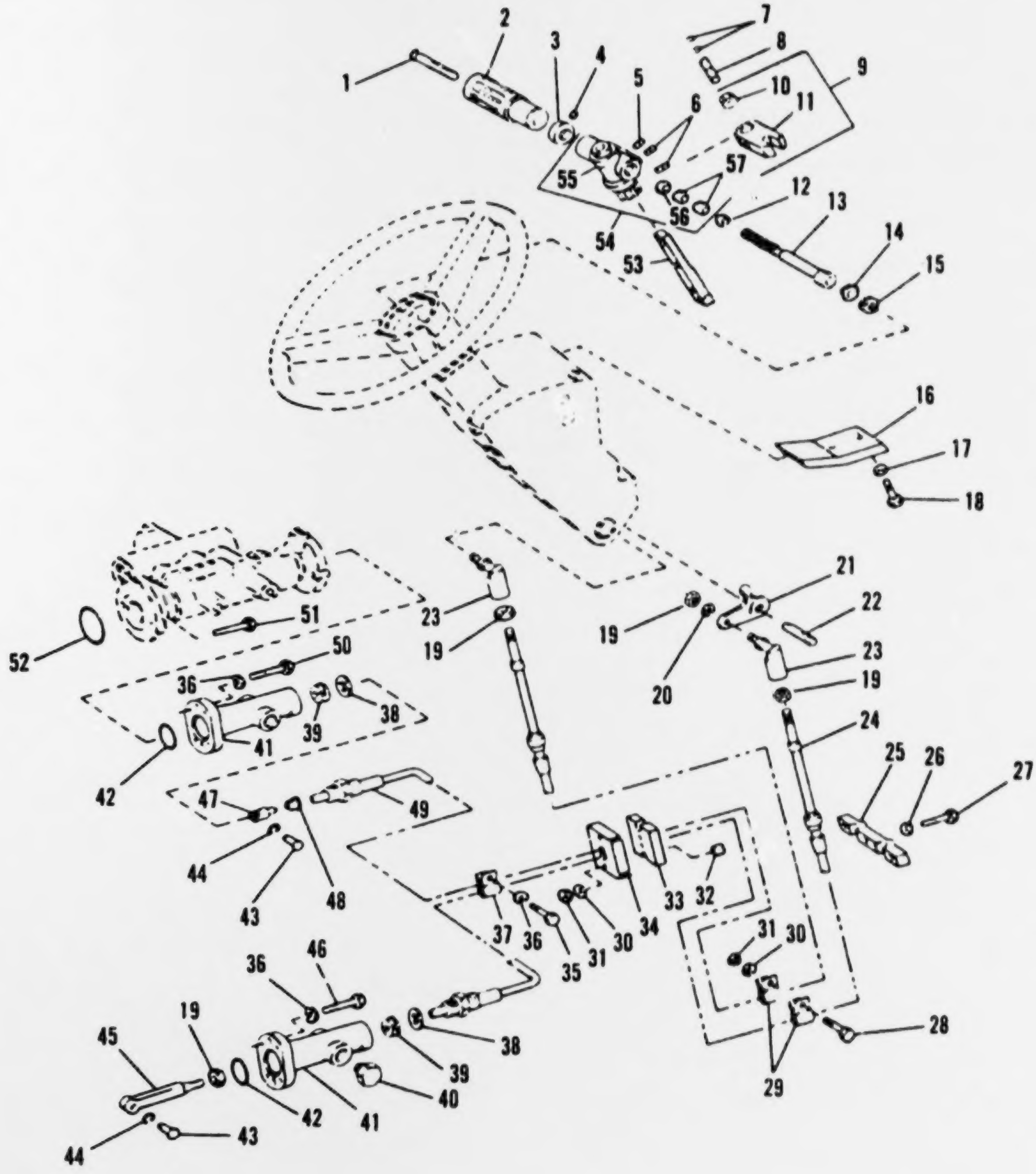

FIGURE 110. TRANSMISSION CONTROL ASSEMBLY

(1) ITEM NO	(2) SMR CODE	(3) CAGEC	(4) PART NUMBER	(5) DESCRIPTION AND USABLE ON CODES(UOC)	(6) QTY
				GROUP 0710: TRANSMISSION ASSEMBLY (HYDRAULIC), (HYDRAMATIC), (HYDRO-STATIC), (TORQUMATIC), (ALLISON), AND ASSOCIATED PARTS	
				FIG. 110 TRANSMISSION CONTROL ASSEMBLY	
1	PAFZZ	11083	3K1644	SCREW,MACHINE.......................... UOC:V53	2
2	PFFZZ	11083	6K5177	HANDLE,SHIFT........................... UOC:V53	1
3	XBFZZ	11083	1V6346	DIAL,SCALE............................. UOC:V53	1
4	PAFZZ	96906	MS51965-40	SETSCREW............................... UOC:V53	1
5	PAFZZ	11083	102571	SETSCREW............................... UOC:V53	3
6	PAFZZ	11083	102570	SETSCREW............................... UOC:V53	2
7	PAFZZ	96906	MS16632-1050	RING,RETAINING......................... UOC:V53	2
8	XBFZZ	11083	1V6348	PIN.................................... UOC:V53	1
9	PAFZZ	11083	1V6342	GEAR,SPUR.............................. UOC:V53	1
10	PAFZZ	11083	1V5326	.BEARING,SLEEVE........................ UOC:V53	1
11	XAFZZ	11083	1V5324	.GEAR,SECTOR........................... UOC:V53	1
12	PAFZZ	11083	9K6605	SPACER,RING............................ UOC:V53	1
13	XDFZZ	11083	1V6347	SHAFT.................................. UOC:V53	1
14	PAFZZ	11083	1V9809	PLUG,PROTECTIVE,DUS.................... UOC:V53	1
15	PAFZZ	80756	RR112CD	RING,RETAINING......................... UOC:V53	1
16	XDFZZ	11083	2V3713	STOP................................... UOC:V53	1
17	PAFZZ	11083	5P1075	WASHER,SQUARE CONE..................... UOC:V53	2
18	PAFZZ	11083	0S1594	BOLT,MACHINE........................... UOC:V53	2
19	PAFZZ	24617	120613	NUT,PLAIN,HEXAGON...................... UOC:V53	4
20	XDFZZ	83355	1-4INNVYLKWASH	WASHER,LOCK............................ UOC:V53	1
21	XDFZZ	11083	4V3059	BELLCRANK.............................. UOC:V53	1
22	XDFZZ	11083	4V3058	PIN.................................... UOC:V53	1

(1) ITEM NO	(2) SMR CODE	(3) CAGEC	(4) PART NUMBER	(5) DESCRIPTION AND USABLE ON CODES(UOC)	(6) QTY
23	PAFZZ	11083	9L2685	BALL JOINT............................ UOC:V53	2
24	XDFZZ	03039	56-3331-2096	CABLE ASSY............................ UOC:V53	1
25	XDFZZ	11083	4V0031	CLAMP................................. UOC:V53	1
26	PAFZZ	11083	5P0537	WASHER................................ UOC:V53	3
27	PAFZZ	80020	8775C-25	BOLT,MACHINE.......................... UOC:V53	3
28	PAFZZ	11083	S1615	BOLT,MACHINE.......................... UOC:V53	1
29	PAFZZ	75272	COV-C709	HOOK,SUPPORT.......................... UOC:V53	2
30	PAFZZ	11083	1H3338	LOCKWASHER............................ UOC:V53	3
31	PAFZZ	24617	426376	NUT,PLAIN,HEXAGON..................... UOC:V53	3
32	PBFZZ	11083	1B79C4	SPACER................................ UOC:V53	2
33	PAFZZ	11083	2V3215	SEAL,RUBBER SPECIAL................... UOC:V53	1
34	PBFZZ	11083	2V3222	PLATE,RESILIENT MOU................... UOC:V53	1
35	PAFZZ	96906	MS18154-58	SCREW,CAP,HEXAGON H................... UOC:V53	1
36	PAFZZ	96906	MS35338-45	WASHER,LOCK........................... UOC:V53	5
37	PAFZZ	11083	4D7794	CLAMP,LOOP............................ UOC:V53	1
38	PAFZZ	11083	4D3704	WASHER,FLAT........................... UOC:V53	2
39	PAFZZ	83259	75C0-5/8	PACKING WITH RETAIN................... UOC:V53	2
40	PBFZZ	11083	9S4190	PLUG.................................. UOC:V53	2
41	XDFZZ	11083	2V6078	BRACKET............................... UOC:V53	2
42	PAFZZ	11083	4F7952	PACKING,PREFORMED..................... UOC:V53	2
43	PAFZZ	11083	8D5295	PIN................................... UOC:V53	2
44	PAFZZ	96906	MS16633-1025	RING,RETAINING........................ UOC:V53	2
45	PAFZZ	11083	8B3768	CLEVIS,ROD END........................ UOC:V53	1
46	PAFZZ	11083	0L1351	BOLT,MACHINE.......................... UOC:V53	2
47	XDFZZ	11083	4V0074	END,YOKE.............................. UOC:V53	1
48	XDFZZ	11083	2V6076	CAM................................... UOC:V53	1

(1) ITEM NO	(2) SMR CODE	(3) CAGEC	(4) PART NUMBER	(5) DESCRIPTION AND USABLE ON CODES(UOC)	(6) QTY
49	XDFZZ	03C39	56-3331-2111	CABLE ASSY.............................. UOC:V53	1
50	PAFZZ	11083	1A2029	BOLT,MACHINE........................... UOC:V53	2
51	PFFZZ	11083	1TC765	BOLT,MACHINE........................... UOC:V53	2
52	PAFZZ	11083	1H9656	PACKING,PREFORMED..................... UOC:V53	1
53	XDFZZ	11083	2V90C9	BACK................................... UOC:V53	1
54	XDFFF	11083	1V6343	LEVER ASSY............................. UOC:V53	1
55	XAFZZ	11083	4VC212	.LEVER................................. UOC:V53	1
56	PAFZZ	11083	2M2489	.SEAL,PLAIN ENCASED................... UOC:V53	1
57	PAFZZ	11083	1V5326	.BEARING,SLEEVE....................... UOC:V53	2

END OF FIGURE

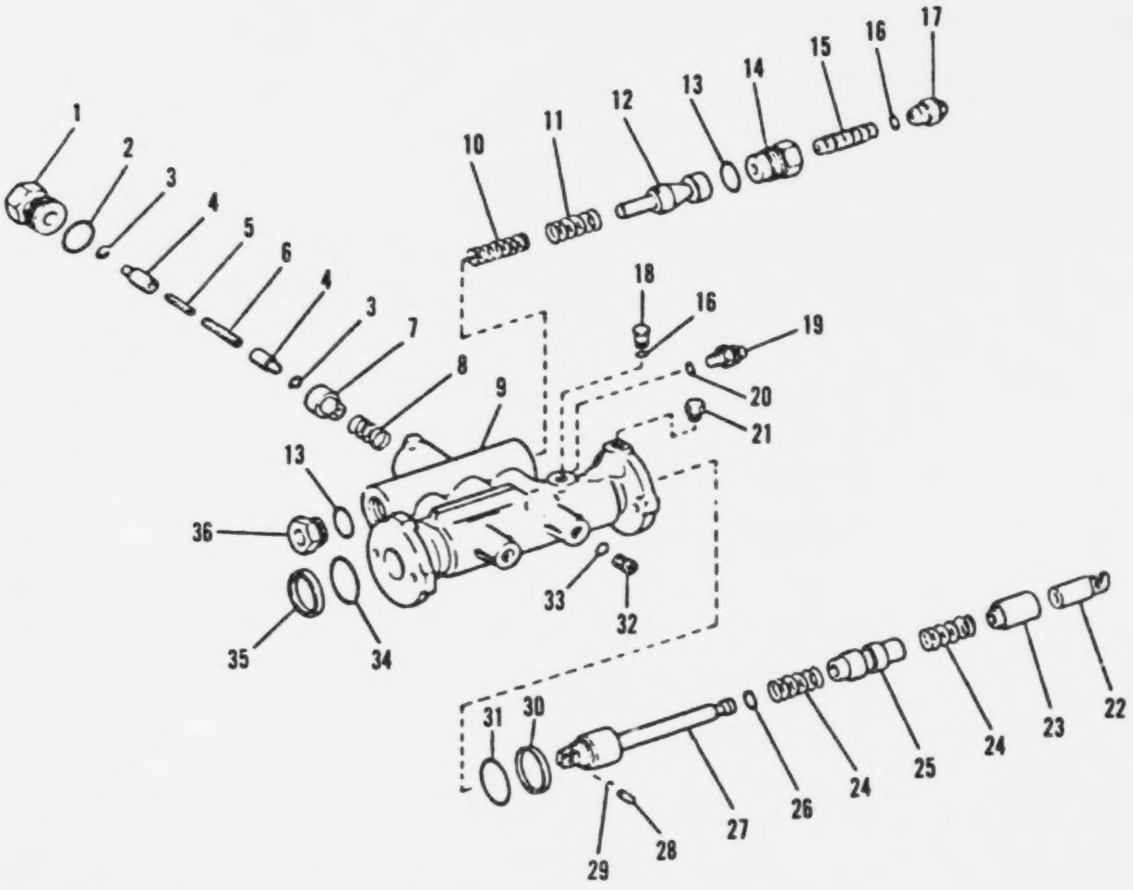

FIGURE 111. TRANSMISSION LOCK ASSEMBLY

(1) ITEM NO	(2) SMR CODE	(3) CAGEC	(4) PART NUMBER	(5) DESCRIPTION AND USABLE ON CODES(UOC)	(6) QTY
				GROUP 0710: TRANSMISSION ASSEMBLY (HYDRAULIC), (HYDRAMATIC), (HYDRO-STATIC), (TORQUMATIC), (ALLISON), AND ASSOCIATED PARTS	
				FIG.111 TRANSMISSION LOCK ASSEMBLY	
1	PBFZZ	11083	9S6130	PLUG,MACHINE THREAD................ UOC:V53	1
2	PAFZZ	11083	2S4078	PACKING,PREFORMED.................. UOC:V53	1
3	PAFZZ	79136	N5000-77	RING,RETAINING..................... UOC:V53	2
4	XDFZZ	11083	2V7364	PLUNGER ASSY....................... UOC:V53	2
5	XDFZZ	11083	2V7247	SPRING............................. UOC:V53	1
6	XDFZZ	11083	2V7225	SPRING............................. UOC:V53	1
7	XDFZZ	11083	3V8513	SLEEVE............................. UOC:V53	1
8	XDFZZ	11083	2V7246	SPRING............................. UOC:V53	1
9	PAFZZ	11083	2V7469	HOUSING,MECHANICAL................. UOC:V53	1
10	XDFZZ	11083	2V7249	SPRING............................. UOC:V53	1
11	XDFZZ	11083	2V7248	SPRING............................. UOC:V53	1
12	XDFZZ	11083	2V7254	PLUNGER............................ UOC:V53	1
13	PAFZZ	11083	7M8485	SEAL,ADAPTER,MOTOR................. UOC:V53	2
14	XDFZZ	11083	2V7367	CYLINDER........................... UOC:V53	1
15	XDFZZ	11083	2V7366	PISTON............................. UOC:V53	1
16	PAFZZ	25184	906-737-70	PACKING,PREFORMED.................. UOC:V53	2
17	PAFZZ	96906	MS51525A6	ADAPTER,STRAIGHT,TU................ UOC:V53	1
18	XDFZZ	11083	5P4482	PLUG,STR THD....................... UOC:V53	1
19	PFFZZ	11083	3J7352	ADAPTER,STRAIGHT,TU................ UOC:V53	1
20	PAFZZ	11083	3J7354	PACKING,PREFORMED.................. UOC:V53	1
21	XDFZZ	31408	ASP-1BV	FILTER,AIR......................... UOC:V53	1
22	XDFZZ	11083	2V7253	NUT,SPCL........................... UOC:V53	1
23	PAFZZ	11083	2V7252	SPACER,STEPPED.....................	1

(1) ITEM NO	(2) SMR CODE	(3) CAGEC	(4) PART NUMBER	(5) DESCRIPTION AND USABLE ON CODES(UOC)	(6) QTY
				UOC:V53	
24	XDFZZ	11083	5V1698	SPRING................................. UOC:V53	2
25	XDFZZ	11083	2V7237	SLEEVE................................. UOC:V53	1
26	PAFZZ	11083	8F3469	PACKING,PREFORMED...................... UOC:V53	1
27	XDFZZ	11083	4V2677	RAIL................................... UOC:V53	1
28	XDFZZ	11083	4V2678	PIN.................................... UOC:V53	1
29	PBFZZ	11083	8D5294	RING................................... UOC:V53	1
30	PAFZZ	09257	S32573-123	SPACER,RING............................ UOC:V53	1
31	PAFZZ	11083	6J2419	PACKING,PREFORMED...................... UOC:V53	1
32	PAFZZ	30780	5HP5N	PLUG,MACHINE THREAD.................... UOC:V53	2
33	PAFZZ	81349	M83248/2-905	PACKING,PREFORMED...................... UOC:V53	2
34	PAFZZ	11083	2S4663	GASKET................................. UOC:V53	1
35	PAFZZ	09257	S32573-123	SPACER,RING............................ UOC:V53	1
36	XDFZZ	11083	8J4645	PLUG,STR THD........................... UOC:V53	1

END OF FIGURE

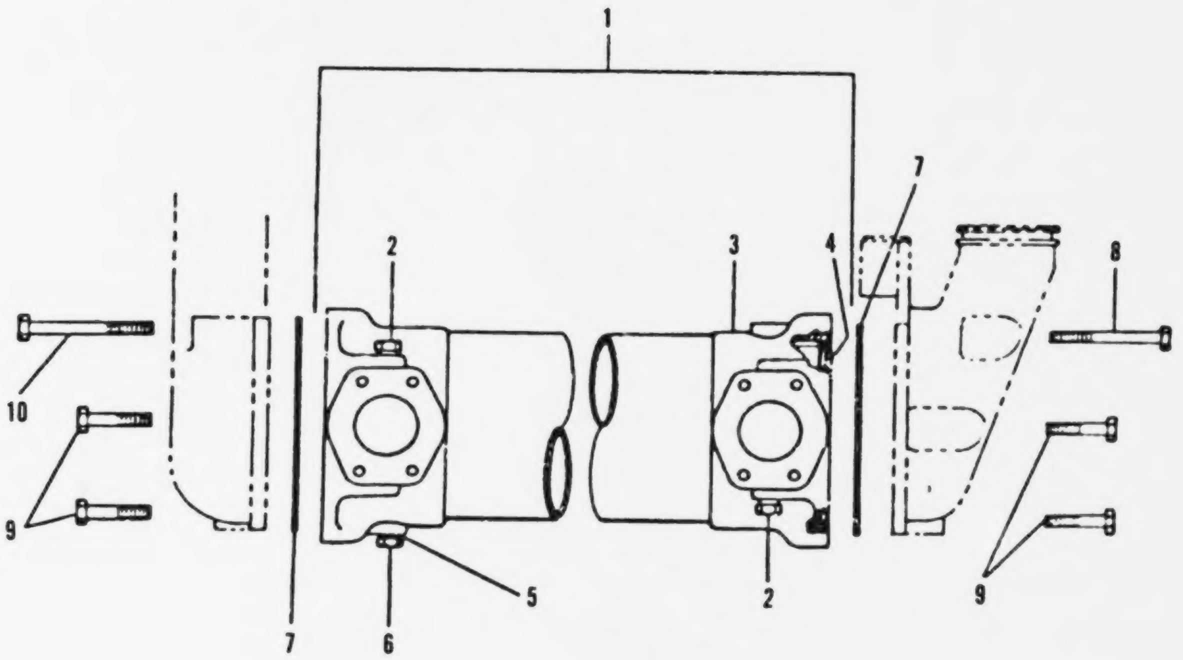

FIGURE 112. TRANSMISSION OIL COOLER

(1) ITEM NO	(2) SMR CODE	(3) CAGEC	(4) PART NUMBER	(5) DESCRIPTION AND USABLE ON CODES(UOC)	(6) QTY
				GROUP 0721: COOLERS, PUMPS, MOTORS	
				FIG. 112 TRANSMISSION OIL COOLER	
1	PAFFF	11083	7W02C5	CORE ASSEMBLY,COOLE.................. UOC:V53	1
2	PAFZZ	11083	5M6214	.PLUG,PIPE........................... UOC:V53	2
3	XAFZZ	11083	7S5428	.SHELL ASSY.......................... UOC:V53	1
4	XAFZZ	11083	7N2110	.BUNDLE ASSY,TUBE.................... UOC:V53	1
5	PAFZZ	11083	6F7062	.WASHER,FLAT......................... UOC:V53	1
6	PAFZZ	11083	8M93C7	.PLUG,MACHINE THREAD................. UOC:V53	1
7	PAFZZ	11083	2S795	GASKET PART OF KIT P/N 5R4553 PART OF KIT P/N 6V236.................... UOC:V53	2
8	PAFZZ	11083	L1329	BOLT,MACHINE......................... UOC:V53	2
9	PAFZZ	11083	0S1595	BOLT,MACHINE......................... UOC:V53	8
10	PAFZZ	96906	MS90728-120	SCREW,CAP,HEXAGON H.................. UOC:V53	2

END OF FIGURE

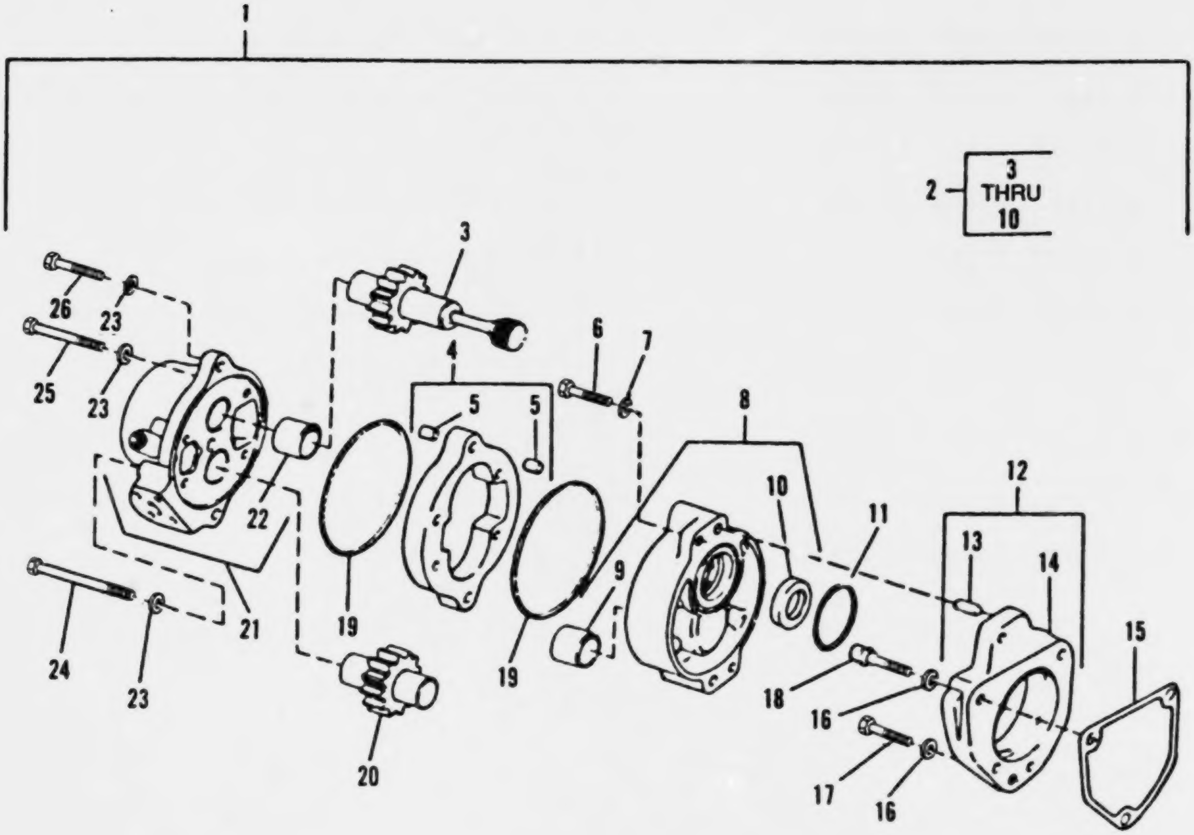

FIGURE 113. TRANSMISSION OIL PUMP

(1) ITEM NO	(2) SMR CODE	(3) CAGEC	(4) PART NUMBER	(5) DESCRIPTION AND USABLE ON CODES(UOC)	(6) QTY
				GROUP 0721: COOLERS, PUMPS, MOTORS	
				FIG. 113 TRANSMISSION OIL PUMP	
1	XDFHH	11083	3P0381	PUMP GRP,GEAR........................ UOC:V53	1
2	PBFHH	11083	3P380	.PUMP,ROTARY.......................... UOC:V53	1
3	XDHZZ	11083	3P0377	..GEAR ASSY,OIL PUMP................. UOC:V53	1
4	XAHHH	11083	2P0268	..BODY ASSY,OIL PUMP................. UOC:V53	1
5	PAHZZ	11083	8M8489	...PIN,HOLLOW........................ UOC:V53	4
6	PAFZZ	11083	1A2029	..BOLT,MACHINE....................... UOC:V53	2
7	PAFZZ	96906	MS35338-45	..WASHER,LOCK........................ UOC:V53	2
8	XDHHH	11083	2P1014	..COVER ASSY,OIL PUMP................ UOC:V53	1
9	PBHZZ	11083	5M3320	...BEARING,SLEEVE.................... UOC:V53	2
10	PAHZZ	11083	5S6622	...PACKING,PREFORMED................. UOC:V53	1
11	PAFZZ	11083	8M5252	.PACKING,PREFORMED................... UOC:V53	1
12	XDFHH	11083	6P1272	.ADAPTER ASSY......................... UOC:V53	1
13	PAHZZ	11083	1H974	..PIN,STRAIGHT,HEADLE................ UOC:V53	8
14	XDHZZ	11083	2P9277	..ADAPTER,OIL PUMP................... UOC:V53	1
15	PAFZZ	11083	2S4080	.GASKET............................... UOC:V53	1
16	PAFZZ	11083	7S9203	.WASHER,FLAT.......................... UOC:V53	3
17	PAFZZ	11083	4K5175	.BOLT,MACHINE......................... UOC:V53	1
18	PAFZZ	11083	5J5793	.BOLT,MACHINE......................... UOC:V53	2
19	PAHZZ	11083	2D8009	.PACKING,PREFORMED.................... UOC:V53	2
20	XDHZZ	11083	4M0503	.GEAR ASSY,OIL PUMP.................. UOC:V53	1
21	XDHZZ	11083	6P4354	.MANIFOLD ASSY,PUMP.................. UOC:V53	1
22	XAHZZ	11083	5M1995	..BEARING,SLEEVE..................... UOC:V53	2
23	PAHZZ	11083	3S4	.WASHER,FLAT.......................... UOC:V53	6
24	PAHZZ	11083	8S9191	.BOLT,MACHINE......................... UOC:V53	2

(1) ITEM NO	(2) SMR CODE	(3) CAGEC	(4) PART NUMBER	(5) DESCRIPTION AND USABLE ON CODES(UOC)	(6) QTY
25	PAHZZ	11083	1A5183	.BOLT,MACHINE........................ UOC:V53	2
26	PAHZZ	11083	0S1619	.BOLT,MACHINE........................ UOC:V53	2

END OF FIGURE

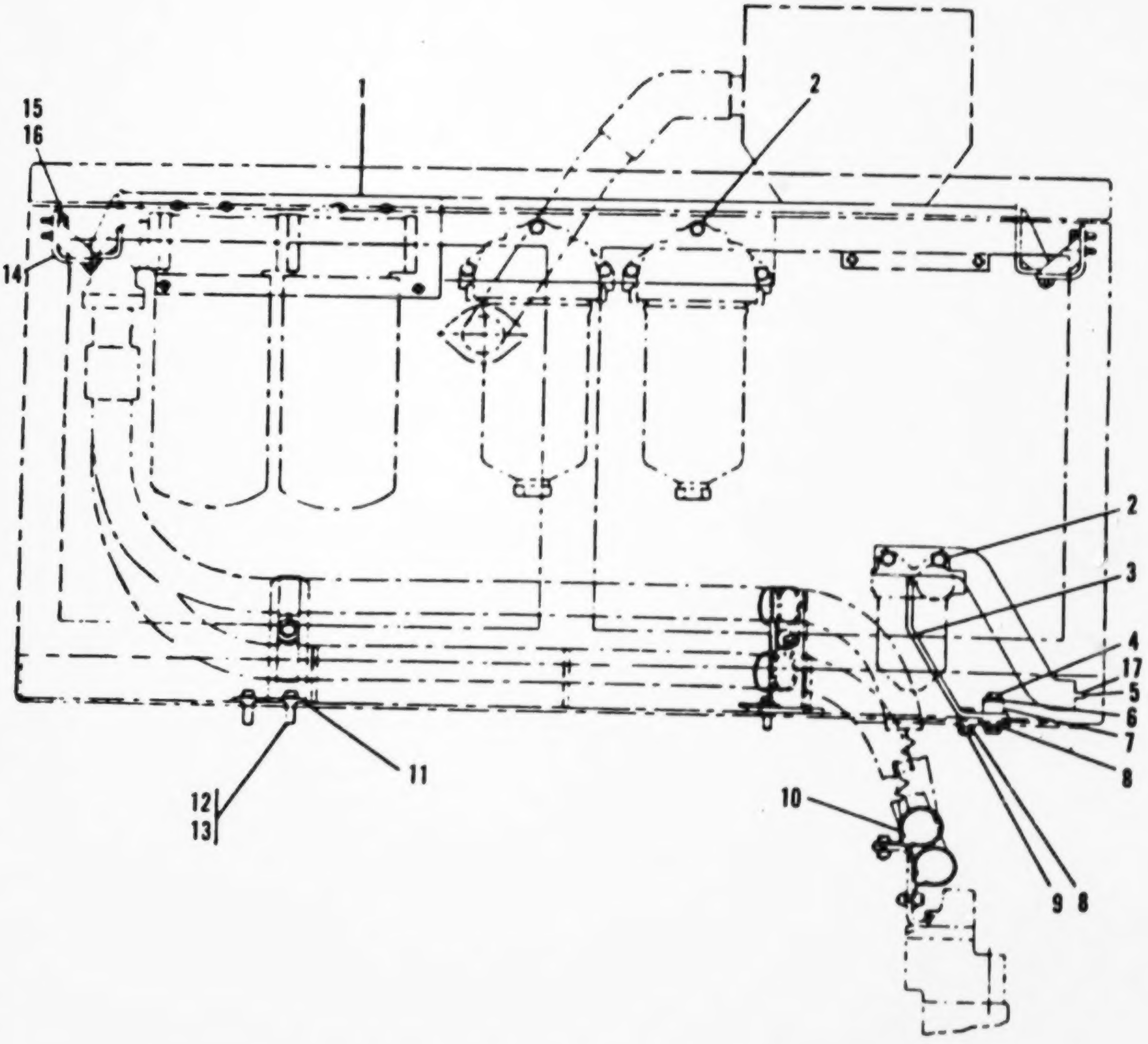

FIGURE 114. TRANSMISSION OIL FILTER SUPPORT

(1) ITEM NO	(2) SMR CODE	(3) CAGEC	(4) PART NUMBER	(5) DESCRIPTION AND USABLE ON CODES(UOC)	(6) QTY
				GROUP 0721: COOLERS, PUMPS, MOTORS	
				FIG. 114 TRANSMISSION OIL FILTER SUPPORT	
1	XDOZZ	11083	5V1884	SUPPORT ASSY........................ UOC:V53	1
2	PAOZZ	11083	1A2029	BOLT,MACHINE........................ UOC:V53	10
3	XDOZZ	11083	5V3837	BRACKET ASSY........................ UOC:V53	1
4	PAOZZ	11083	0S1590	BOLT,MACHINE........................ UOC:V53	1
5	PAOZZ	11083	5M2894	WASHER,FLAT......................... UOC:V53	8
6	XDOZZ	11083	8S9575	SLEEVE.............................. UOC:V53	1
7	PFOZZ	11083	4B4278	WASHER,FLAT......................... UOC:V53	10
8	PAOZZ	15564	1377A	NUT,PLAIN,HEXAGON................... UOC:V53	5
9	PAOZZ	11083	0S1588	BOLT................................ UOC:V53	1
10	XDOZZ	11083	7D1533	CLIP................................ UOC:V53	6
11	XDOZZ	11083	5V1303	BRACKET............................. UOC:V53	2
12	PAOZZ	11083	9M6527	WASHER,FLAT......................... UOC:V53	2
13	PAOZZ	11083	0S1591	SCREW............................... UOC:V53	4
14	XDOZZ	11083	1V9123	BRACKET ASSY........................ UOC:V53	2
15	PAOZZ	11083	6N8863	WASHER,FLAT......................... UOC:V53	6
16	PAOZZ	11083	0S1594	BOLT,MACHINE........................ UOC:V53	10
17	PAOZZ	11083	0L1351	BOLT,MACHINE........................ UOC:V53	2

END OF FIGURE

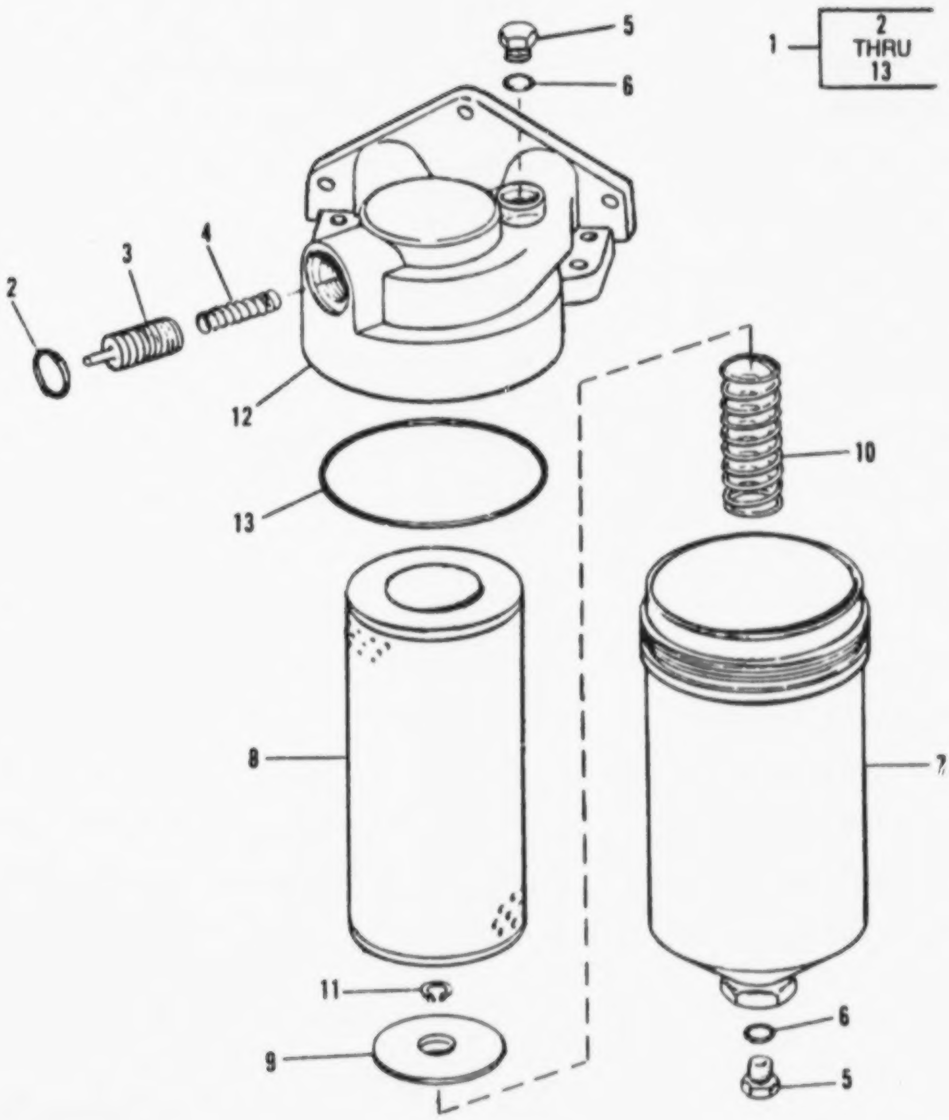

FIGURE 115. TRANSMISSION FILTER ASSEMBLY

(1) ITEM NO	(2) SMR CODE	(3) CAGEC	(4) PART NUMBER	(5) DESCRIPTION AND USABLE ON CODES(UOC)	(6) QTY
				GROUP 0721: COOLERS, PUMPS, MOTORS	
				FIG. 115 TRANSMISSION FILTER ASSEMBLY	
1	XDOOO	11083	6P4603	FILTER GRP,XMSN.................... UOC:V53	2
2	PAOZZ	99517	A180-115MILP25732	.PACKING,PREFORMED.................. UOC:V53	1
3	PBOZZ	11083	1P9600	.SEAL.............................. UOC:V53	1
4	PAOZZ	11083	9M1986	.SPRING,HELICAL,COMP................ UOC:V53	1
5	PAOZZ	11083	9S4191	.PLUG,MACHINE THREAD................ UOC:V53	2
6	PAOZZ	25184	906-737-70	.PACKING,PREFORMED.................. UOC:V53	2
7	PAOZZ	11083	3P0887	.FILTER BODY,FLUID.................. UOC:V53	1
8	PAOZZ	11083	9M9740	.FILTER ELEMENT,FLUI................ UOC:V53	1
9	PAOZZ	11083	7S6745	.RETAINER,PACKING................... UOC:V53	1
10	PBOZZ	11083	3S8652	.SPRING,HELICAL,COMP................ UOC:V53	1
11	PBOZZ	79136	5100-75MD	.RING,RETAINING..................... UOC:V53	1
12	XDOZZ	11083	6P4227	.BASE,XMSN OIL FLTR................. UOC:V53	1
13	PAOZZ	11083	2S8439	.SEAL.............................. UOC:V53	1

END OF FIGURE

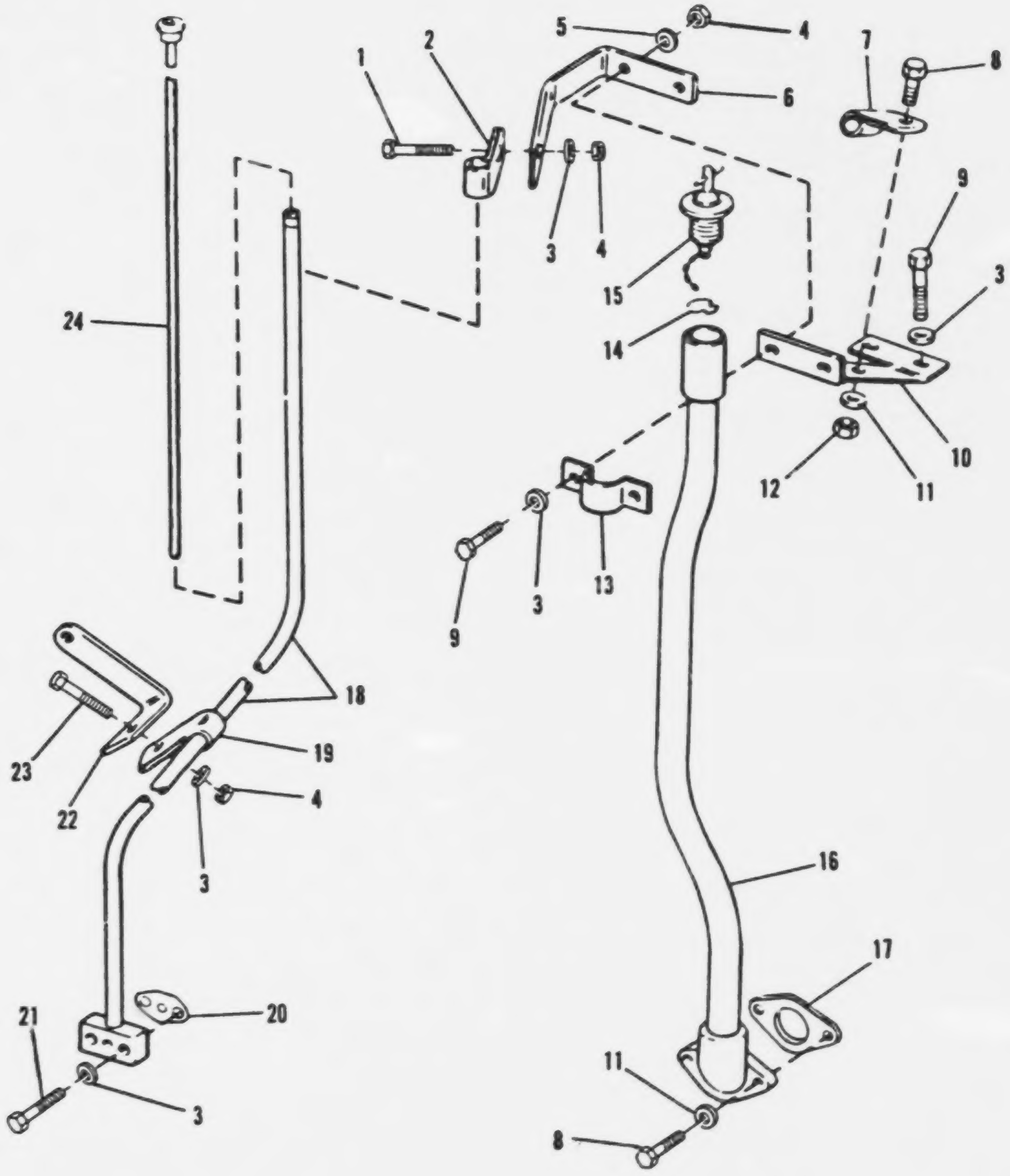

FIGURE 116. TRANSMISSION OIL FILTER

(1) ITEM NO	(2) SMR CODE	(3) CAGEC	(4) PART NUMBER	(5) DESCRIPTION AND USABLE ON CODES(UOC)	(6) QTY
				GROUP 0721: COOLERS, PUMPS, MOTORS	
				FIG. 116 TRANSMISSION OIL FILTER	
1	PAOZZ	96906	MS18154-58	SCREW,CAP,HEXAGON H.................. UOC:V53	1
2	PFOZZ	11083	4B0418	CLIP................................. UOC:V53	1
3	PAOZZ	11083	5M2894	WASHER,FLAT.......................... UOC:V53	8
4	PAOZZ	15564	1377A	NUT,PLAIN,HEXAGON.................... UOC:V53	4
5	PAOZZ	11083	3V3308	WASHER,FLAT.......................... UOC:V53	2
6	XDOZZ	11083	4V5382	BRACKET.............................. UOC:V53	1
7	XDOZZ	11083	1V7287	CLIP................................. UOC:V53	1
8	PAOZZ	11083	7B3235	BOLT,MACHINE......................... UOC:V53	3
9	PAOZZ	11083	0S1588	BOLT,MACHINE......................... UOC:V53	4
10	XDOZZ	11083	2V9054	BRACKET.............................. UOC:V53	1
11	PAOZZ	19207	6299613	WASHER,FLAT.......................... UOC:V53	3
12	PAOZZ	96906	MS5196714	NUT, PLAIN, HEX......................	1
13	XDOZZ	11083	6K3317	CLAMP................................ UOC:V53	1
14	PFOZZ	11083	7S1801	ANCHOR WIRE,SAFETY................... UOC:V53	1
15	PBOZZ	11083	7S1803	CAP,FILLER OPENING................... UOC:V53	1
16	XDOZZ	11083	4V6797	TUBE ASSY............................ UOC:V53	1
17	PAOZZ	11083	2J1799	GASKET............................... UOC:V53	1
18	XDOZZ	11083	2V2167	TUBE ASSY............................ UOC:V53	1
19	PAOZZ	11083	1B3057	CLIP,SPRING TENSION.................. UOC:V53	1
20	PFOZZ	11083	4K5537	GASKET............................... UOC:V53	1
21	PAOZZ	11083	0S1591	SCREW................................ UOC:V53	2
22	XDOZZ	11083	2V9053	ANGLE................................ UOC:V53	1
23	PAOZZ	11083	0S1594	BOLT,MACHINE......................... UOC:V53	1
24	PFOZZ	11083	2V2169	GAGE,OIL LEVEL....................... UOC:V53	1

END OF FIGURE

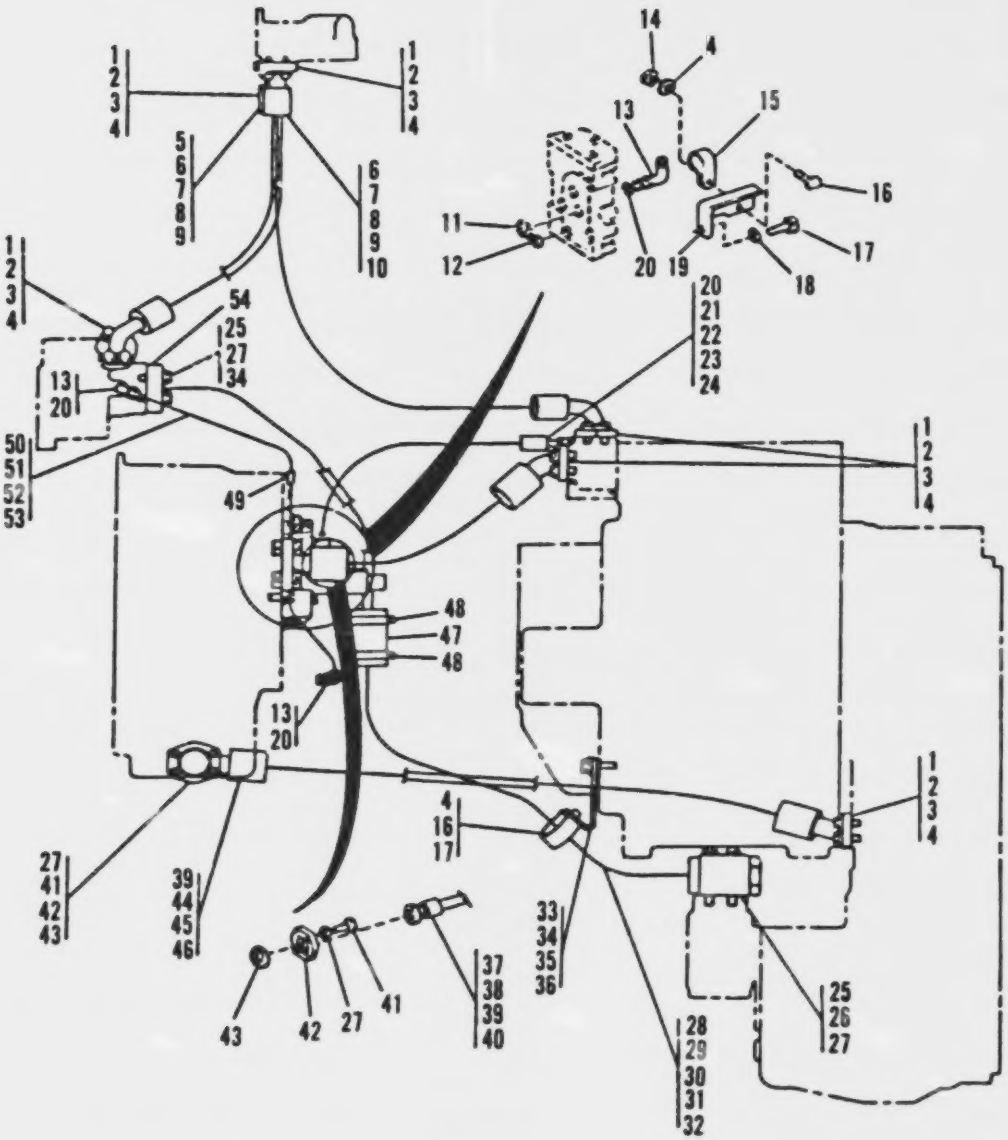

FIGURE 117. TRANSMISSION OIL LINES

(1) ITEM NO	(2) SMR CODE	(3) CAGEC	(4) PART NUMBER	(5) DESCRIPTION AND USABLE ON CODES(UOC)	(6) QTY
				GROUP 0721: COOLERS, PUMPS, MOTORS	
				FIG. 117 TRANSMISSION OIL LINES	
1	PBFZZ	11083	1P4578	FLANGE,PIPE........................... UOC:V53	12
2	PAFZZ	11083	4J0522	PACKING,PREFORMED................. UOC:V53	7
3	PAFZZ	96906	MS90728-89	SCREW,CAP,HEXAGON H................ UOC:V53	28
4	PAFZZ	11083	5P8244	WASHER,FLAT......................... UOC:V53	30
5	MFFFF	11083	2V2934	HOSE ASSY MAKE FROM HOSE P/N 5P181. UOC:V53	1
6	PBFZZ	11083	3S7252	.SLEEVE............................. UOC:V53	4
7	PBFZZ	11083	7S0570	.ADAPTER,STRAIGHT,FL............. UOC:V53	2
8	XDFZZ	11083	7S0575	.STEM ASSY.......................... UOC:V53	2
9	PBFZZ	11083	1P4578	FLANGE,PIPE........................... UOC:V53	6
10	PFOZZ	11083	2V5043	HOSE ASSEMBLY,NONME................ UOC:V53	1
11	PAFZZ	96906	MS9068-214	PACKING,PREFORMED................. UOC:V53	3
12	PAFZZ	11083	8M4447	PACKING,PREFORMED................. UOC:V53	1
13	PBFZZ	96906	MS51527A6	ELBOW,TUBE TO BOSS................ UOC:V53	3
14	PAFZZ	15564	1377A	NUT,PLAIN,HEXAGON................. UOC:V53	1
15	PAFZZ	11083	2V2793	CLAMP,LOOP........................... UOC:V53	2
16	PAFZZ	11083	0L1351	BOLT,MACHINE........................ UOC:V53	1
17	PAFZZ	96906	MS90728-113	SCREW,CAP,HEXAGON H................ UOC:V53	1
18	XBFHH	11083	5R4349	VALVE GRP............................ UOC:V53	1
19	XBFZZ	11083	2V2965	BRACKET.............................. UOC:V53	1
20	PAFZZ	25184	906-737-70	PACKING,PREFORMED................. UOC:V53	4
21	MFFZZ	11083	3V0730	HOSE ASSY MAKE FROM HSE P/N 5V8999. UOC:V53	1
22	PAFZZ	11083	8S6417	.ADAPTER,STRAIGHT,TU............. UOC:V53	2
23	PAFZZ	11083	4S5414	.SLEEVE,HOSE........................ UOC:V53	2
24	PAFZZ	96906	MS51525A6	ADAPTER,STRAIGHT,TU............... UOC:V53	1

) :M	(2) SMR CODE	(3) CAGEC	(4) PART NUMBER	(5) DESCRIPTION AND USABLE ON CODES(UOC)	(6) QTY
'5	PAFZZ	11083	1P3709	PACKING,PREFORMED.................... UOC:V53	2
'6	PAFZZ	11083	1D4569	BOLT,MACHINE......................... UOC:V53	4
7	PAFZZ	11083	5P8245	WASHER,FLAT.......................... UOC:V53	20
8	XDFFF	11083	2V2990	TUBE ASSY............................ UOC:V53	1
'9	PAFZZ	81349	M83248/2-932	PACKING,PREFORMED.................... UOC:V53	1
0	PAFZZ	11083	9S7563	PLUG,MACHINE,THREAD.................. UOC:V53	1
1	XDFZZ	11083	5P9513	ELBOW................................ UOC:V53	1
2	XAFZZ	11083	2V2962	TUBE................................. UOC:V53	1
3	PBFZZ	11083	5S3779	ADAPTER,STRAIGHT,FL.................. UOC:V53	1
4	XDFZZ	11083	2V5036	BRACKET ASSY......................... UOC:V53	1
5	PAFZZ	11083	1A1460	BOLT,MACHINE......................... UOC:V53	6
6	PAFZZ	11083	5P1076	WASHER,SHOULDERED A.................. UOC:V53	1
7	MFFZZ	11083	2V5038	HOSE ASSY MAKE FROM HOSE P/N 5P182. UOC:V53	1
8	PBFZZ	11083	5S3779	ADAPTER..............................	1
9	PBFZZ	11083	3S7116	.SLEEVE.............................. UOC:V53	4
0	PAFZZ	11083	3S8570	.ELBOW,FLANGE TO HOS................. UOC:V53	1
1	PAFZZ	11083	S1587	BOLT,MACHINE......................... UOC:V53	8
2	PBFZZ	11083	1P4579	FLANGE............................... UOC:V53	4
3	PAFZZ	11083	4J0524	PACKING,PREFORMED.................... UOC:V53	2
4	MFFZZ	11083	2V2931	HOSE ASSY MAKE FROM HOSE P/N 5P182. UOC:V53	1
5	PBFZZ	11083	3S8568	ELBOW,FLANGE TO HOS.................. UOC:V53	1
6	PBFZZ	11083	5S3777	.ELBOW,FLANGE TO HOS................. UOC:V53	1
7	PAFZZ	11083	2V2963	HOSE,NONMETALLIC..................... UOC:V53	1
8	XDFZZ	81343	J536S50	CLAMP,HOSE........................... UOC:V53	2
9	PAFZZ	96906	MS21333-57	CLAMP,LOOP........................... UOC:V53	1
0	PAFZZ	11083	2V9667	TUBE ASSEMBLY,METAL.................. UOC:V53	1
1	XAFZZ	11083	5P0078	.TUBE,STEEL..........................	1

(1) ITEM NO	(2) SMR CODE	(3) CAGEC	(4) PART NUMBER	(5) DESCRIPTION AND USABLE ON CODES(UOC)	(6) QTY
				UOC:V53	
52	PAFZZ	10001	12Z6126-6	.NUT,TUBE COUPLING.................. UOC:V53	2
53	PBFZZ	11083	3R4463	.SLEEVE,FLARED,TUBE.................. UOC:V53	2
54	XDFFF	11083	2V2591	TUBE ASSY.......................... UOC:V53	1

END OF FIGURE

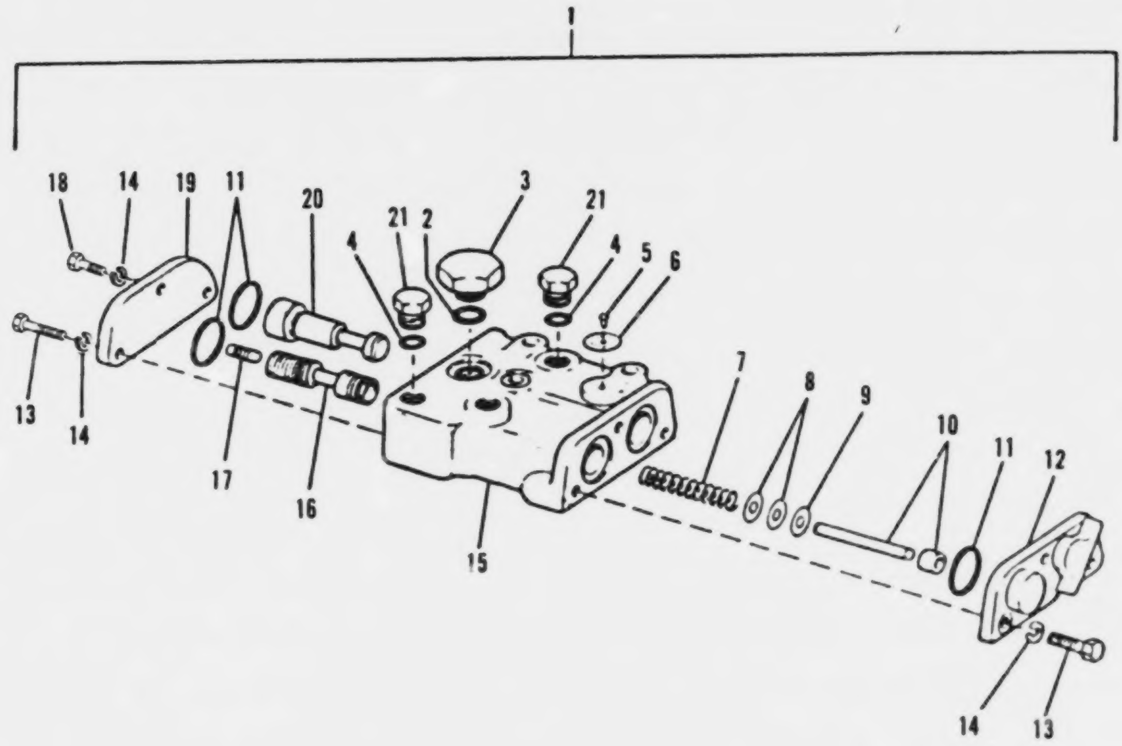

FIGURE 118. SEQUENCE AND PRESSURE CONTROL VALVE ASSEMBLY

(1) ITEM NO	(2) SMR CODE	(3) CAGEC	(4) PART NUMBER	(5) DESCRIPTION AND USABLE ON CODES(UOC)	(6) QTY
				GROUP 0721: COOLERS,PUMPS, MOTORS	
				FIG. 118 SEQUENCE AND PRESSURE CONTROL VALVE ASSEMBLY	
1	XDFZZ	11083	5R4349	VALVE GRP	1
2	PAHZZ	11083	8M8515	.PACKING,PREFORMED UOC:V53	2
3	PAHZZ	11083	5R4384	.PLUG,MACHINE THREAD UOC:V53	2
4	PAHZZ	25184	9C6-737-70	.PACKING,PREFORMED UOC:V53	2
5	PAHZZ	11083	7B3028	.SCREW,DRIVE UOC:V53	1
6	XBHZZ	11083	5R4386	.PLATE,IDENT UOC:V53	1
7	XBHZZ	11083	2P5755	.SPRING,HELICAL,COMP UOC:V53	1
8	PBHZZ	11083	8S6214	.SPACER,RING UOC:V53	4
9	PBHZZ	11083	8S6215	.SPACER,RING UOC:V53	2
10	XBHZZ	11083	6P8528	.STOP ASSY UOC:V53	1
11	PAHZZ	11083	8M5249	.PACKING,PREFORMED UOC:V53	4
12	XAHZZ	11083	5R4356	.COVER UOC:V53	1
13	PAHZZ	11083	1A2029	.BOLT,MACHINE UOC:V53	5
14	PAHZZ	96906	MS35338-45	.WASHER,LOCK UOC:V53	6
15	XAHZZ	11083	2P5746	.BODY,CONTROL VALVE UOC:V53	1
16	XAHZZ	11083	2P5747	.SPOOL,SEQUENCE UOC:V53	1
17	PBHZZ	11083	2M1168	.SLUG UOC:V53	1
18	PAHZZ	11083	0L1351	.BOLT,MACHINE UOC:V53	1
19	XAHZZ	11083	2P5764	.COVER UOC:V53	1
20	XAHZZ	11083	5R4385	.SPOOL UOC:V53	1
21	PAHZZ	11083	9S4191	.PLUG,MACHINE THREAD UOC:V53	2

END OF FIGURE

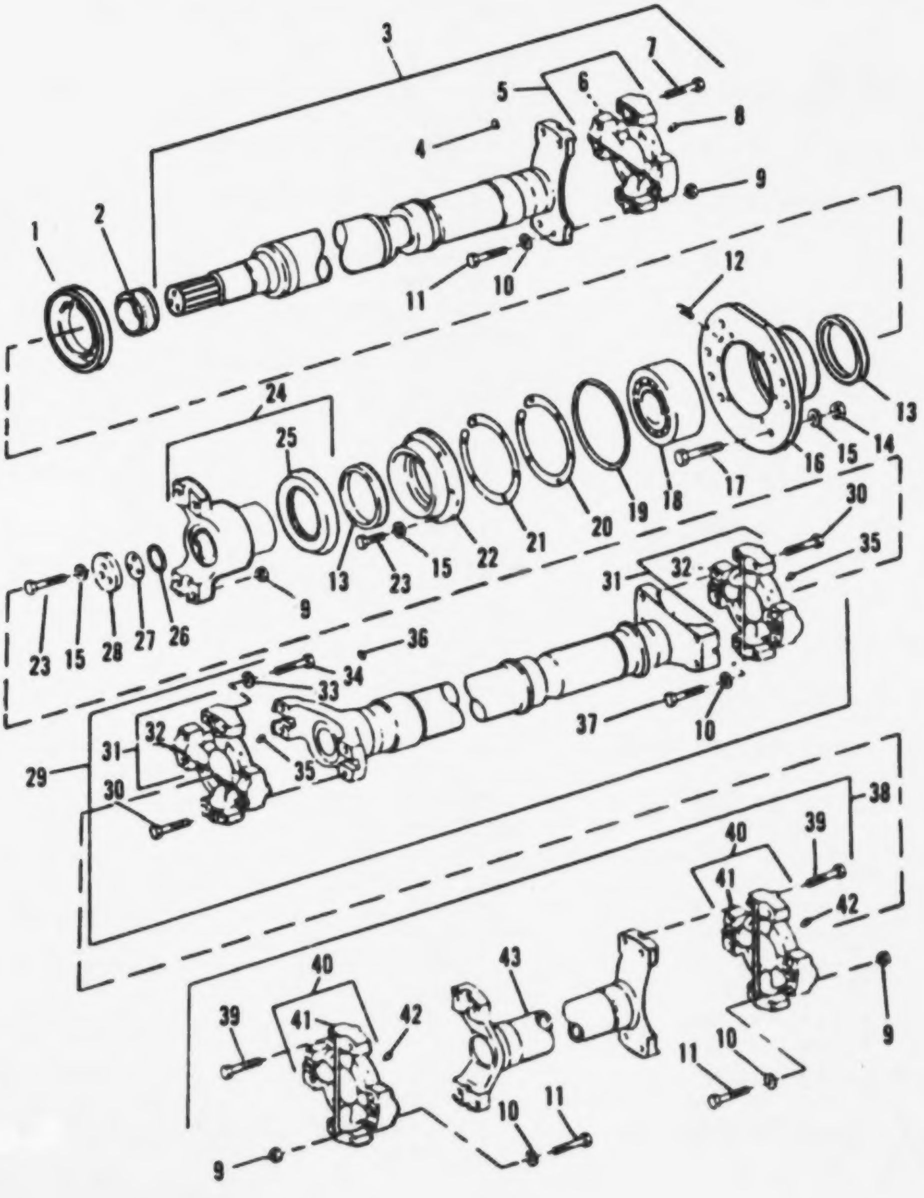

FIGURE 119. MAIN DRIVE SHAFT ASSEMBLY

(1) ITEM NO	(2) SMR CODE	(3) CAGEC	(4) PART NUMBER	(5) DESCRIPTION AND USABLE ON CODES(UOC)	(6) QTY
				GROUP 09: PROPELLER AND PROPELLER SHAFTS	
				GROUP 0900: PROPELLER SHAFTS	
				FIG. 119 MAIN DRIVE SHAFT ASSEMBLY	
1	PAFZZ	11083	3K9608	DEFLECTOR,DIRT AND................ UOC:V53	1
2	XDFZZ	11083	3K9617	SPACER,SLEEVE...................... UOC:V53	1
3	XDOOO	70960	960-13-43585	JOINT GRP.......................... UOC:V53	1
3	XDOOO	76260	2S-22373-1	JOINT GRP.......................... UOC:V53	1
4	PAFZZ	96906	MS15003-1	.FITTING,LUBRICATION............... UOC:V53	2
5	PAFZZ	11083	6K0885	.PARTS KIT,UNIVERSAL............... UOC:V53	1
5	PBFZZ	11083	7H3958	.PARTS KIT,UNIVERSAL............... UOC:V53	1
6	PAFZZ	11083	6K0884	.SEAL,PLAIN ENCASED................ UOC:V53	4
7	PAOZZ	96906	MS90727-116	SCREW,CAP,HEXAGON H................ UOC:V53	12
8	PAFZZ	95879	1641-B	FITTING,LUBRICATION................ UOC:V53	1
9	PAOZZ	96906	MS51968-15	NUT,PLAIN,HEXAGON.................. UOC:V53	16
10	PAOZZ	19207	6299613	WASHER,FLAT........................ UOC:V53	19
11	XDOZZ	11083	L1732	BOLT,MACHINE....................... UOC:V53	12
12	PAFZZ	96906	MS15003-2	FITTING,LUBRICATION................ UOC:V53	1
13	PAFZZ	11083	2D8540	SEAL,PLAIN ENCASED................. UOC:V53	2
14	PAFZZ	96906	MS51967-14	NUT,PLAIN,HEXAGON.................. UOC:V53	6
15	PAFZZ	11083	2M849	WASHER,FLAT........................ UOC:V53	18
16	XDFZZ	11083	3K9604	CAGE,BEARING....................... UOC:V53	1
17	PAFZZ	11083	1D4566	BOLT,MACHINE....................... UOC:V53	6
18	PAFZZ	11083	3K9616	BEARING,ROLLER,SELF................ UOC:V53	1
19	PAFZZ	11083	9F1399	PACKING,PREFORMED.................. UOC:V53	1
20	PAFZZ	11083	3S328	SHIM............................... UOC:V53	1
21	PAFZZ	11083	3S329	SHIM...............................	1

(1) ITEM NO	(2) SMR CODE	(3) CAGEC	(4) PART NUMBER	(5) DESCRIPTION AND USABLE ON CODES(UOC)	(6) QTY
				UOC:V53	
22	XDFZZ	11083	7K6432	RETAINER,BEARING......................	1
				UOC:V53	
23	PAFZZ	96906	MS90728-113	SCREW,CAP,HEXAGON H...................	9
				UOC:V53	
24	XDFZZ	11083	3K9517	YOKE ASSY.............................	1
				UOC:V53	
25	PAFZZ	11083	3K9608	.DEFLECTOR,DIRT AND...................	1
				UOC:V53	
26	PAFZZ	11083	2H2665	PACKING,PREFORMED.....................	1
				UOC:V53	
27	PAFZZ	11083	2S1378	SHIM..................................	2
				UOC:V53	
28	PFFZZ	11083	2S0672	RETAINER,RANGE TRAN...................	1
				UOC:V53	
29	XDOOO	70960	960-04-43583	JOINT,UNIV............................	1
				UOC:V53	
29	XDCOO	76260	2A-22371-1	JOINT GRP.............................	1
				UOC:V53	
30	PAFZZ	96906	MS90727-116	.SCREW,CAP,HEXAGON H..................	8
				UOC:V53	
31	PAFZZ	11083	6K0885	.PARTS KIT,UNIVERSAL..................	2
				UOC:V53	
31	PBFZZ	11083	7H3958	.PARTS KIT,UNIVERSAL..................	2
				UOC:V53	
32	PAFZZ	11083	6K0884	..SEAL,PLAIN ENCASED..................	4
				UOC:V53	
33	PAOZZ	19207	6299613	WASHER,FLAT...........................	4
				UOC:V53	
34	PAOZZ	96906	MS90727-118	SCREW,CAP,HEXAGON H...................	4
				UOC:V53	
35	PAFZZ	95879	1641-B	FITTING,LUBRICATION...................	2
				UOC:V53	
36	PAFZZ	96906	MS15003-1	FITTING,LUBRICATION...................	1
				UOC:V53	
37	PAOZZ	11083	L1558	BOLT,MACHINE..........................	4
				UOC:V53	
38	XDOOO	70960	960-03-43582	JOINT GRP,UNIV........................	1
				UOC:V53	
38	XDFOO	76260	2A-21797-1	JOINT GRP,UNIV........................	1
				UOC:V53	
39	PAOZZ	96906	MS90727-116	.SCREW,CAP,HEXAGON H..................	8
				UOC:V53	
39	PAFZZ	11083	S1603	.BOLT,MACHINE.........................	8
				UOC:V53	
40	PAFZZ	78500	CP92N53	.PARTS KIT,UNIVERSAL..................	2
				UOC:V53	
40	PAFZZ	11083	7H3958	.PARTS KIT,UNIVERSAL..................	2
				UOC:V53	
41	PAFZZ	78500	SE-RLR21-1	..SEAL,PLAIN ENCASED..................	4
				UOC:V53	
42	PAFZZ	96906	MS15006-1	.FITTING,LUBRICATION..................	2

(1) ITEM NO	(2) SMR CODE	(3) CAGEC	(4) PART NUMBER	(5) DESCRIPTION AND USABLE ON CODES(UOC)	(6) QTY
				UOC:V53	
42	PAFZZ	95879	1641-B	.FITTING,LUBRICATION................	2
				UOC:V53	
43	XBFZZ	11083	4V2753	.TUBE...............................	1
				UOC:V53	

END OF FIGURE

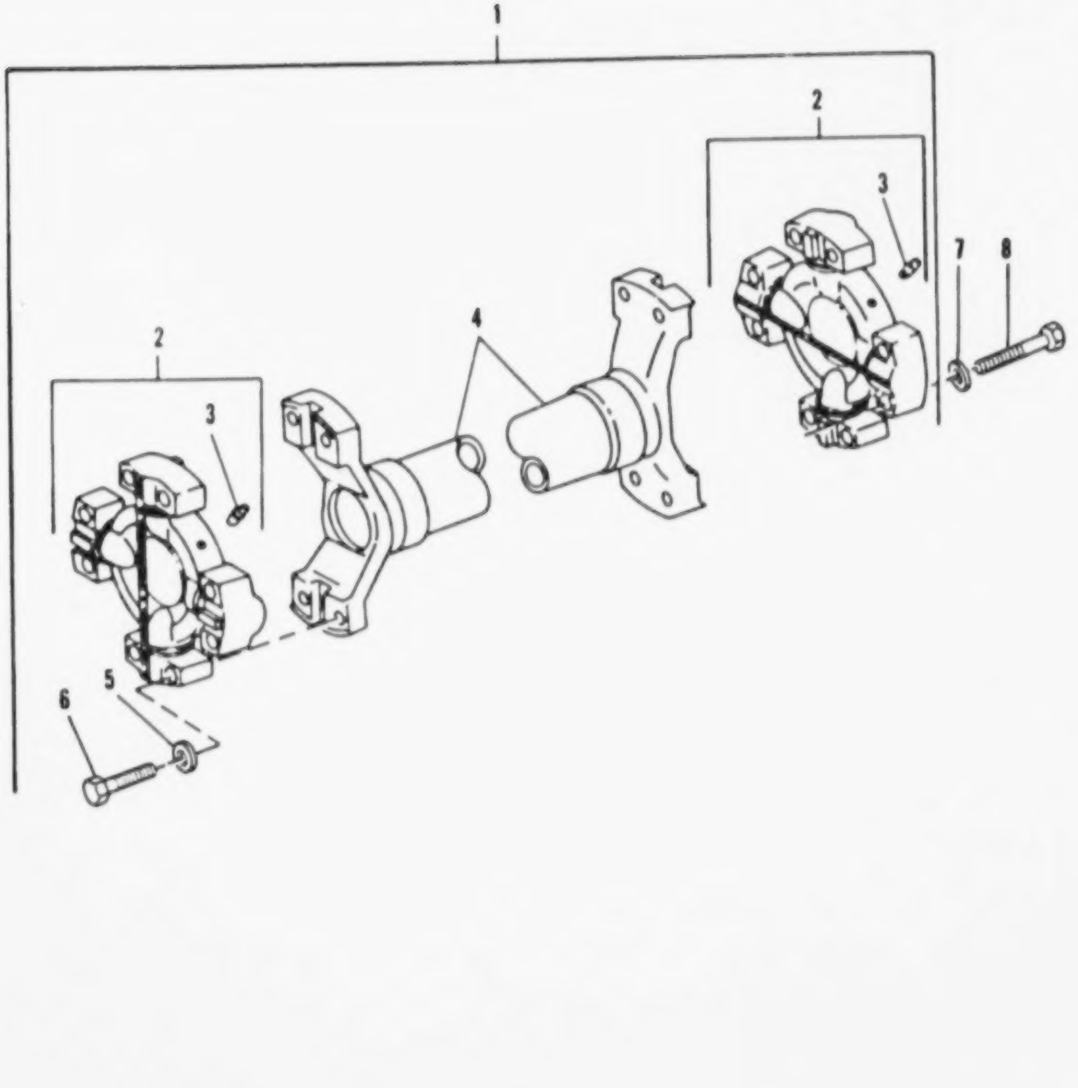

FIGURE 120. UPPER DRIVE SHAFT ASSEMBLY

(1) ITEM NO	(2) SMR CODE	(3) CAGEC	(4) PART NUMBER	(5) DESCRIPTION AND USABLE ON CODES(UOC)	(6) QTY
				GROUP 0900: PROPELLER SHAFTS	
				FIG. 120 UPPER DRIVE SHAFT ASSEMBLY	
1	XBFFF	70960	954-C3-43581	JOINT GRP,UNIV........................ UOC:V53	1
2	PAFZZ	81221	287126	.SPIDER AND BEARING.................. UOC:V53	2
3	PFFZZ	11083	3H122	..FITTING,LUBRICATION............... UOC:V53	1
4	XDFZZ	70960	954-60-43581	.TUBE................................ UOC:V53	1
5	PAFZZ	11083	5P7213	.WASHER,FLAT......................... UOC:V53	8
6	PAFZZ	96906	MS90727-114	.SCREW,CAP,HEXAGON H................. UOC:V53	8
7	PAFZZ	19207	6299613	WASHER,FLAT.......................... UOC:V53	8
8	PAFZZ	96906	MS90727-116	SCREW,CAP,HEXAGON H.................. UOC:V53	8

END OF FIGURE

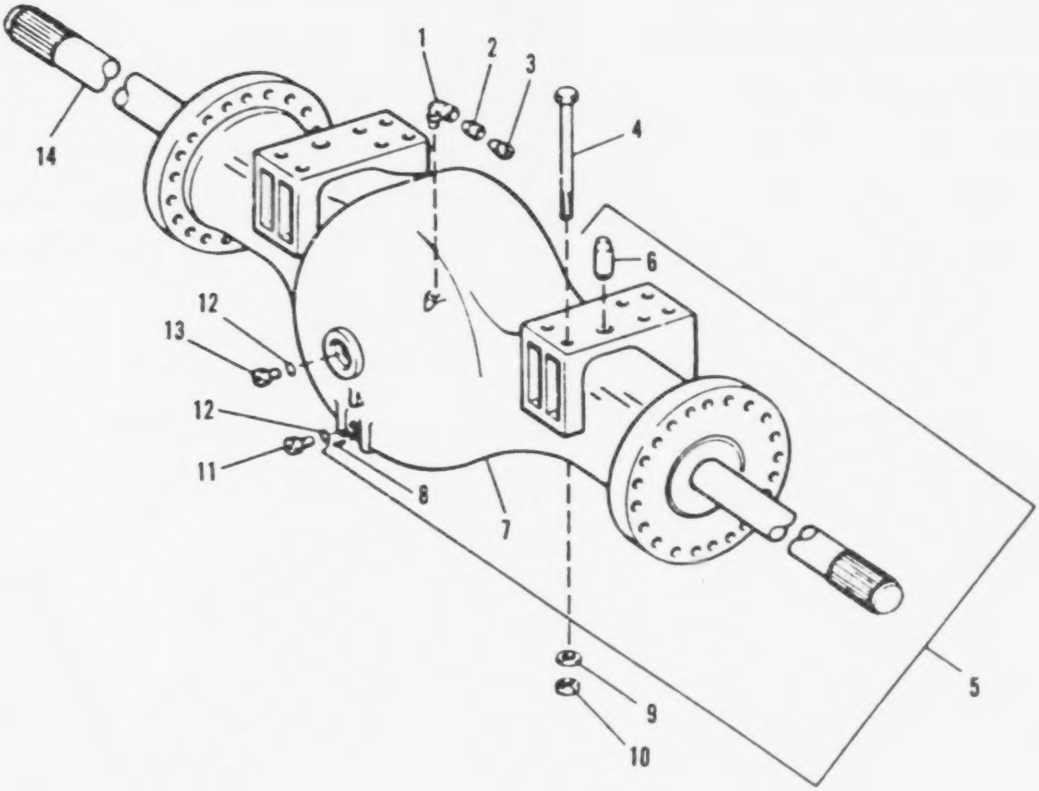

FIGURE 121. FRONT AXLE ASSEMBLY

(1) ITEM NO	(2) SMR CODE	(3) CAGEC	(4) PART NUMBER	(5) DESCRIPTION AND USABLE ON CODES(UOC)	(6) QTY
				GROUP 10: FRONT AXLE	
				GROUP 1000: FRONT AXLE ASSEMBLY	
				FIG. 121 FRONT AXLE ASSEMBLY	
1	PAFZZ	79470	C3409X4	ELBOW,PIPE.......................... UOC:V53	1
2	PBFZZ	11083	4M5317	BUSHING,REDUCER.................... UOC:V53	1
3	PAFZZ	57733	47200	VALVE,SAFETY RELIEF................ UOC:V53	1
4	PAFZZ	11083	1J2989	BOLT,MACHINE....................... UOC:V53	12
5	XDFHH	11083	1V6336	HOUSING ASSY,F AXLE................ UOC:V53	1
6	XDHZZ	11083	6M1622	.PIN,STR,HDLS...................... UOC:V53	2
7	XAHZZ	11083	1V5807	.HOUSING........................... UOC:V53	1
8	PBHZZ	11083	2K9062	.PIN............................... UOC:V53	1
9	PAFZZ	11083	3K5234	WASHER,FLAT........................ UOC:V53	12
10	PAFZZ	11083	2J3507	NUT,PLAIN,HEXAGON.................. UOC:V53	12
11	PAOZZ	36540	7674021	PLUG,MACHINE THREAD................ UOC:V53	1
12	PAOZZ	11083	7M8485	SEAL,ADAPTER,MOTOR................. UOC:V53	2
13	PAOZZ	36540	845621	PLUG,MACHINE THREAD................ UOC:V53	1
14	XDFHZ	11083	1V0383	SHAFT,AXLE......................... UOC:V53	2

END OF FIGURE

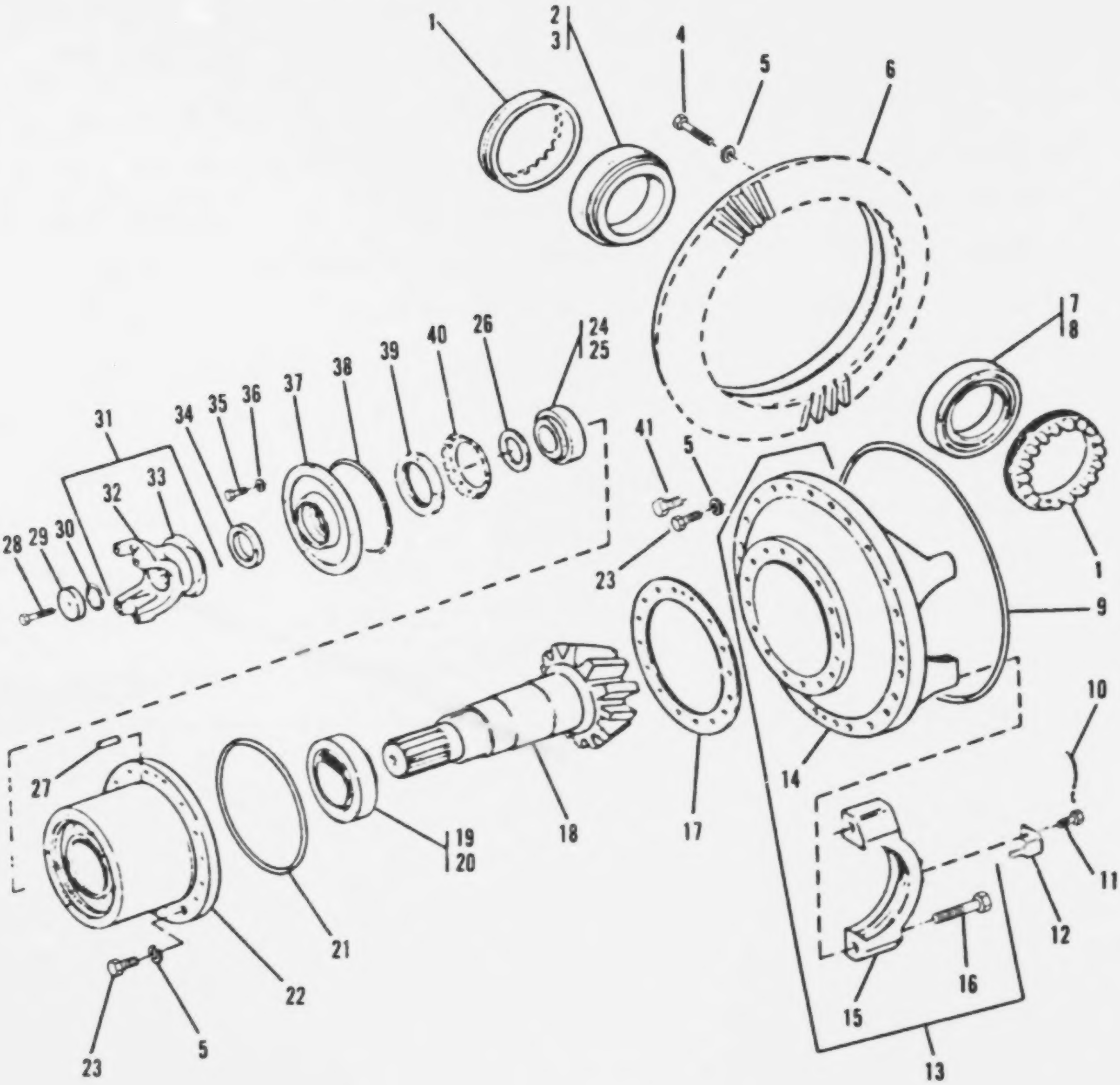

FIGURE 122. DIFFERENTIAL ASSEMBLY

(1) ITEM NO	(2) SMR CODE	(3) CAGEC	(4) PART NUMBER	(5) DESCRIPTION AND USABLE ON CODES(UOC)
				GROUP 1002: DIFFERENTIAL
				FIG. 122 DIFFERENTIAL ASSEMBLY
1	PAHZZ	11083	5K3559	NUT,PLAIN,ROUND.................... UOC:V53
2	PBHZZ	11083	4B9373	CONE AND ROLLERS,TA................ UOC:V53
3	PBHZZ	11083	4B9374	CUP,TAPERED ROLLER................. UOC:V53
4	PAHZZ	11083	9S1362	SCREW,CAP,HEXAGON H................ UOC:V53
5	PAHZZ	11083	2S0115	WASHER,FLAT........................ UOC:V53
6	XDHZZ	11083	2V4734	GEAR,DIFFERENTIAL R................ UOC:V53
7	PAHZZ	11083	5P2526	CAP,PILLOW BLOCK................... UOC:V53
8	PBHZZ	11083	2K5065	CONE AND ROLLERS,TA................ UOC:V53
9	PBHZZ	11083	3D6422	PACKING,PREFORMED.................. UOC:V53
10	PAHZZ	11083	3P1389	LOCKWIRE........................... UOC:V53
11	PAHZZ	11083	S214	BOLT,MACHINE....................... UOC:V53
12	XDHZZ	11083	5K3661	LOCK,BNG........................... UOC:V53
13	XDHHH	11083	2V4462	CARRIER ASSY,DIFF.................. UOC:V53
14	XAHZZ	11083	2V4371	.CARRIER........................... UOC:V53
15	XAHZZ	11083	9K2805	.CAP,BEARING....................... UOC:V53
16	PFHZZ	11083	5K3628	.SCREW,CAP,HEXAGON H............... UOC:V53
17	XDHZZ	11083	9K2549	SHIM PACK.......................... UOC:V53
18	XDHZZ	11083	2V4461	SHAFT,BEV PINION................... UOC:V53
19	XDHZZ	11083	5P2523	CONE,TPR RLR BRG................... UOC:V53
20	XDHZZ	11083	5P2525	CUP,TPR RLR BRG.................... UOC:V53
21	PAHZZ	11083	2D6533	SEAL............................... UOC:V53
22	XDHZZ	11083	2V4857	HOUSING,BRNG,SPRT.................. UOC:V53
23	PAHZZ	11083	2A1538	BOLT,MACHINE....................... UOC:V53
24	XBHZZ	11083	1P2654	CONE,ROLLER BRG.................... UOC:V53

(1) ITEM NO	(2) SMR CODE	(3) CAGEC	(4) PART NUMBER	(5) DESCRIPTION AND USABLE ON CODES(UOC)	(6) QTY
25	XDHZZ	11083	1P2655	CUP,ROLLER BRG......................... UOC:V53	1
26	XDHZZ	11083	1V7885	WASHER................................. UOC:V53	1
27	PBHZZ	11083	2K9062	PIN.................................... UOC:V53	1
28	PAHZZ	11083	1D3419	SCREW,CAP,HEXAGON H.................... UOC:V53	1
29	XDHZZ	11083	7K1655	RETAINER............................... UOC:V53	1
30	PBHZZ	11083	2H2665	PACKING,PREFORMED...................... UOC:V53	2
31	XDHHH	11083	1V8574	YOKE ASSY.............................. UOC:V53	1
32	XAHZZ	11083	2V7170	.YOKE.................................. UOC:V53	1
33	PBHZZ	11083	3K9608	.DEFLECTOR,DIRT AND.................... UOC:V53	1
34	PAHZZ	11083	2D8540	SEAL,PLAIN ENCASED..................... UOC:V53	1
35	PAHZZ	11083	1A2029	BOLT,MACHINE........................... UOC:V53	6
36	PAHZZ	11083	5M2854	WASHER,FLAT............................ UOC:V53	6
37	XDHZZ	11083	2V4440	RETAINER............................... UOC:V53	1
38	PAHZZ	11083	5S3676	PACKING,PREFORMED...................... UOC:V53	1
39	PBHZZ	11083	7J5367	NUT,LOCK............................... UOC:V53	1
40	PBHZZ	60038	TW115	WASHER,KEY............................. UOC:V53	1
41	PAHZZ	11083	1D4610	BOLT,MACHINE........................... UOC:V53	4

END OF FIGURE

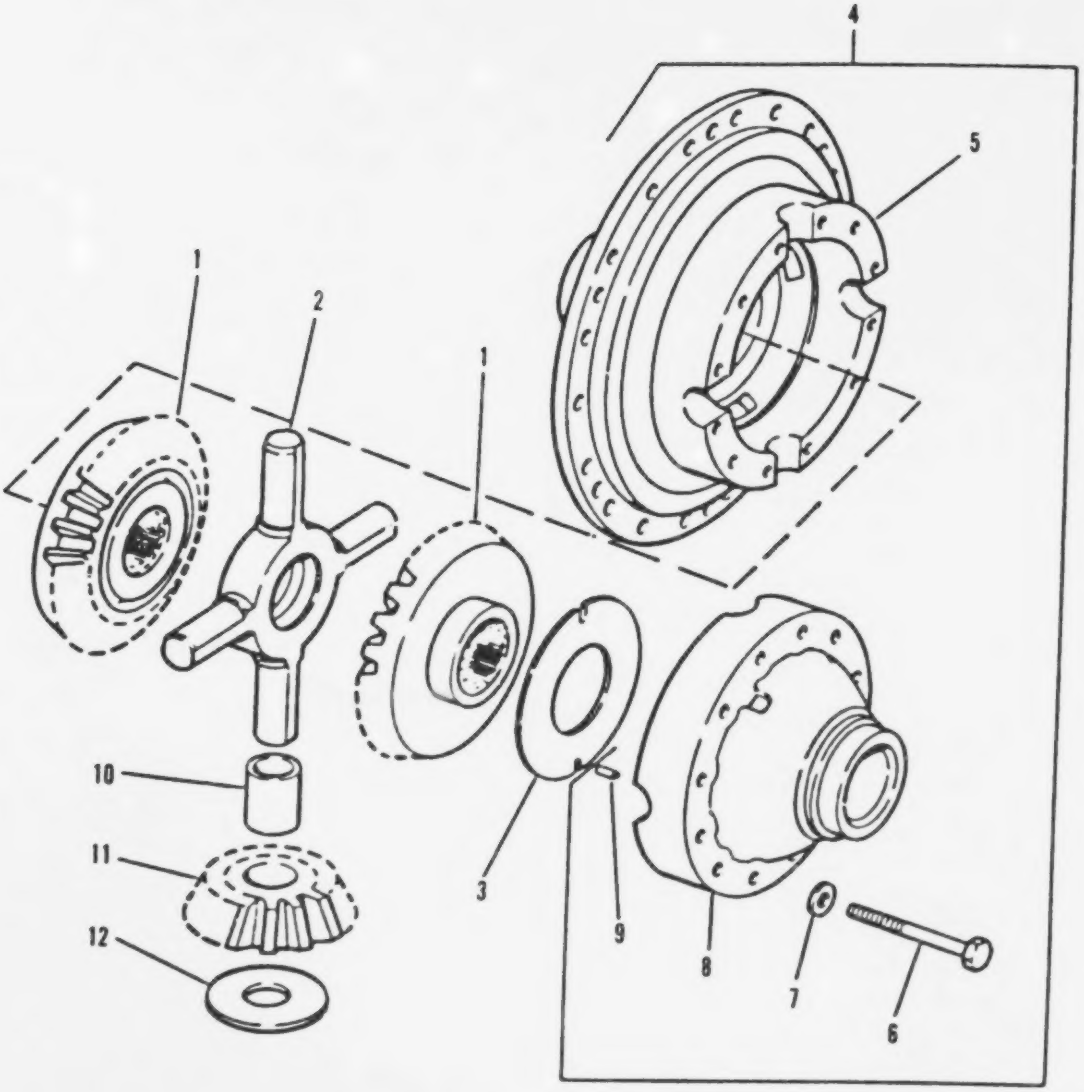

FIGURE 123. BEVEL GEAR ASSEMBLY

(1) ITEM NO	(2) SMR CODE	(3) CAGEC	(4) PART NUMBER	(5) DESCRIPTION AND USABLE ON CODES(UOC)	(6) QTY
				GROUP 1002: DIFFERENTIAL	
				FIG. 123 BEVEL GEAR ASSEMBLY	
1	XDHZZ	11083	4V8756	GEAR,DIFF BEVEL.................... UOC:V53	2
2	XDHZZ	11083	4V8735	SPIDER............................. UOC:V53	1
3	PAHZZ	11083	3V4033	WASHER, THRUST.....................	2
4	XDFFH	11083	4V8733	CASE ASSY,DIFF..................... UOC:V53	1
5	XAHZZ	11083	9K2804	.CASE,FLANGE HLF................... UOC:V53	1
6	PAHZZ	11083	L1169	.BOLT,MACHINE...................... UOC:V53	12
7	PAHZZ	11083	4D3704	.WASHER,FLAT....................... UOC:V53	12
8	XAHZZ	11083	9K2803	.CASE,PLAIN HLF.................... UOC:V53	1
9	PBFZZ	11083	3D6509	.PIN,STRAIGHT,HEADLE............... UOC:V53	4
10	PAHZZ	11083	9K2514	BEARING,SLEEVE..................... UOC:V53	4
11	XDHZZ	11083	4V8755	PINION,DIFF BEVEL.................. UOC:V53	4
12	XDFZZ	11083	9K2515	WASHER............................. UOC:V53	4

END OF FIGURE

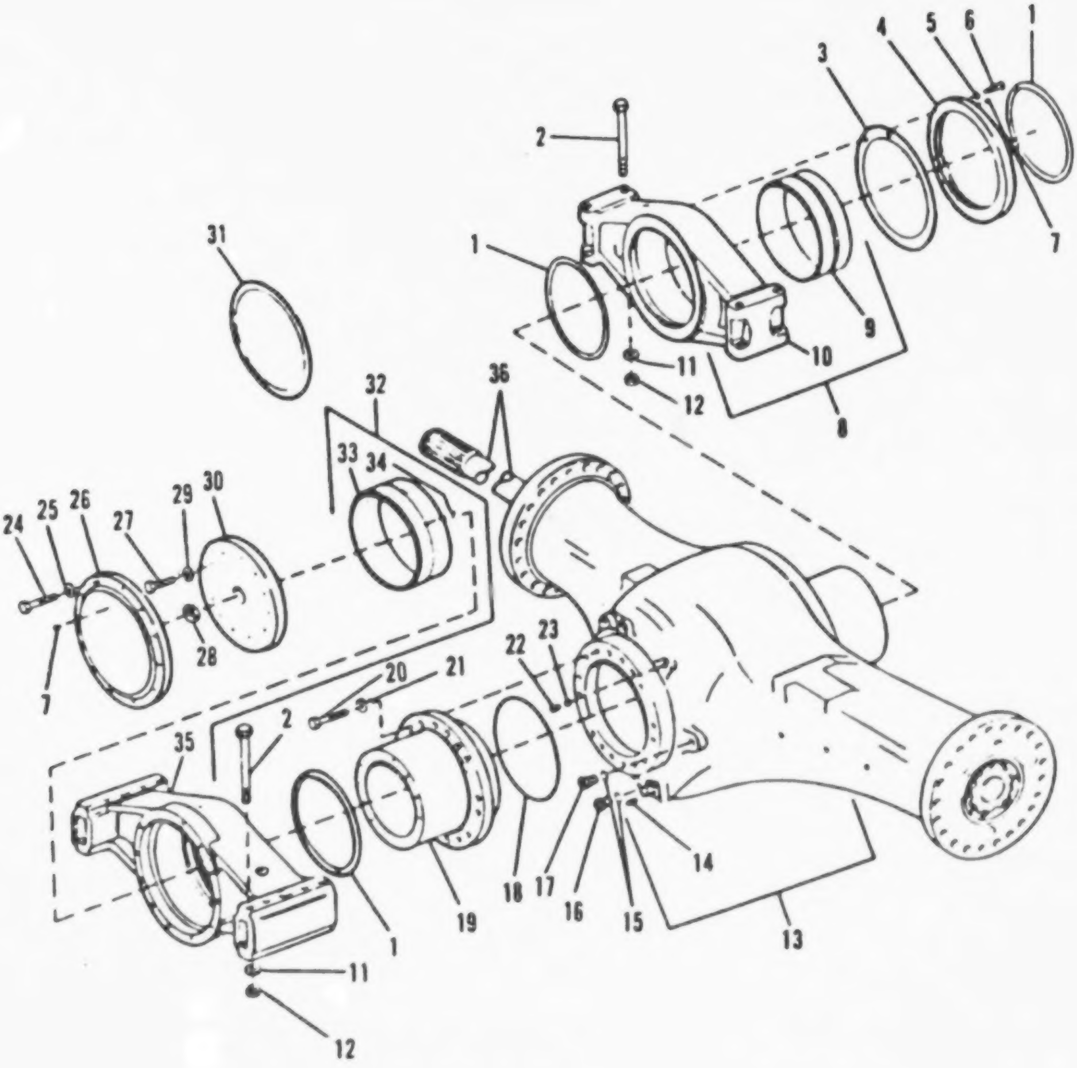

FIGURE 124. REAR AXLE ASSEMBLY

(1) ITEM NO	(2) SMR CODE	(3) CAGEC	(4) PART NUMBER	(5) DESCRIPTION AND USABLE ON CODES(UOC)	(6) QTY
				GROUP 11: REAR AXLE	
				GROUP 1100: REAR AXLE ASSEMBLY	
				FIG. 124 REAR AXLE ASSEMBLY	
1	PAFZZ	11083	9M6057	SEAL,RING............................ UOC:V53	2
2	PAFZZ	11083	1D4646	SCREW,CAP,HEXAGON H.................. UOC:V53	12
3	XDFZZ	11083	9M6058	GASKET............................... UOC:V53	1
4	XDHZZ	11083	6M1601	RETAINER,BNG......................... UOC:V53	1
5	PAFZZ	11083	5M2894	WASHER,FLAT.......................... UOC:V53	12
6	PAFZZ	11083	0S1571	BOLT................................. UOC:V53	12
7	PAFZZ	04043	A-5679	VALVE,SAFETY RELIEF.................. UOC:V53	2
8	XDFHH	11083	6M1606	SUPPORT ASSY,TRUN,F.................. UOC:V53	1
9	XDFZZ	11083	6M1592	.BEARING,SLEEVE...................... UOC:V53	1
10	XAHZZ	11083	7K4343	.SUPPORT............................. UOC:V53	1
11	PAFZZ	11083	9M2828	WASHER,FLAT.......................... UOC:V53	12
12	PAFZZ	11083	2J3507	NUT,PLAIN,HEXAGON.................... UOC:V53	12
13	XDHHH	11083	1V6337	HOUSING ASSY,AXLE.................... UOC:V53	1
14	PBHZZ	11083	2K9062	.PIN................................. UOC:V53	1
15	PAOZZ	11083	7M8485	SEAL,ADAPTER,MOTOR................... UOC:V53	2
16	PAOZZ	36540	7674021	PLUG,MACHINE THREAD.................. UOC:V53	1
17	PAOZZ	36540	845621	PLUG,MACHINE THREAD.................. UOC:V53	1
18	PAHZZ	11083	2D6533	SEAL................................. UOC:V53	1
19	XDFZZ	11083	2V6129	COVER................................ UOC:V53	1
20	PAHZZ	11083	2A1538	BOLT,MACHINE......................... UOC:V53	16
21	PAHZZ	11083	1F9233	WASHER,FLAT.......................... UOC:V53	16
22	PAFZZ	57733	47200	VALVE,SAFETY RELIEF.................. UOC:V53	1
23	PBFZZ	11083	4M5317	BUSHING,PIPE......................... UOC:V53	1

(1) ITEM NO	(2) SMR CODE	(3) CAGEC	(4) PART NUMBER	(5) DESCRIPTION AND USABLE ON CODES(UOC)	(6) QTY
24	PAHZZ	96906	MS90728-164	SCREW,CAP,HEXAGON H................. UOC:V53	12
25	PAHZZ	11083	4D3704	WASHER,FLAT........................ UOC:V53	12
26	XDHZZ	11083	2V6143	COVER.............................. UOC:V53	1
27	PAHZZ	96906	MS90728-169	SCREW,CAP,HEXAGON H................. UOC:V53	12
28	PAFZZ	11083	4B4098	PLUG,EXPANSION..................... UOC:V53	1
29	PAHZZ	11083	9H1024	WASHER,FLAT........................ UOC:V53	12
30	XDHZZ	11083	4V7193	PLATE.............................. UOC:V53	1
31	XDHZZ	11083	5S0085	BEARING,THRUST..................... UOC:V53	2
32	XDFHH	11083	6M1605	SUPPORT ASSY,TRUN,R................ UOC:V53	1
33	XDHZZ	11083	6M1592	.BEARING,SLEEVE.................... UOC:V53	1
34	XDHZZ	11083	6M1622	.PIN,STR,HDLS...................... UOC:V53	2
35	XAHZZ	11083	6M1560	.SUPPORT........................... UOC:V53	1
36	XDHZZ	11083	1V0383	SHAFT,AXLE......................... UOC:V53	2

END OF FIGURE

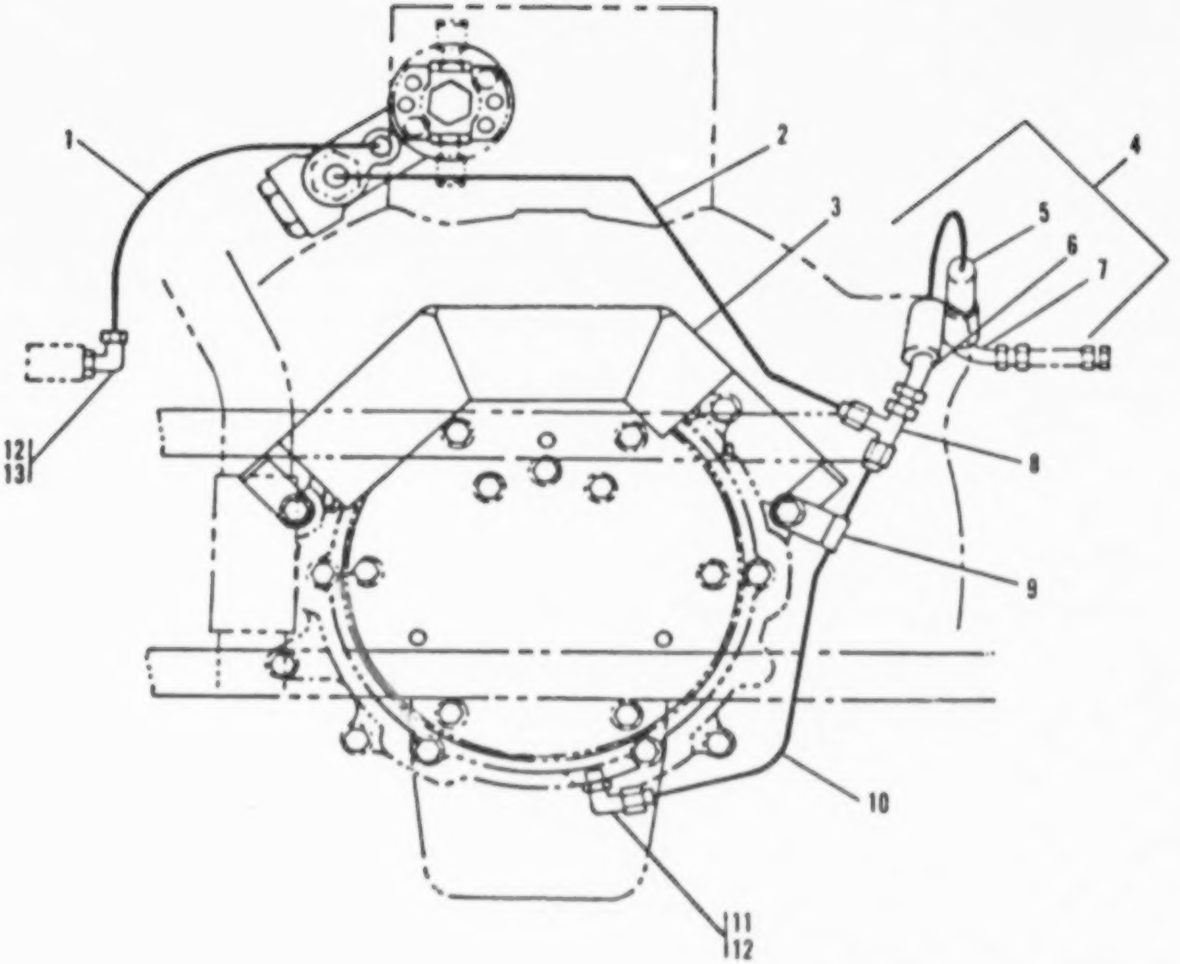

FIGURE 125. SAFETY BRAKE LINES GROUP

(1) ITEM NO	(2) SMR CODE	(3) CAGEC	(4) PART NUMBER	(5) DESCRIPTION AND USABLE ON CODES(UOC)	(6) QTY
				GROUP 12: BRAKES	
				GROUP 1201: HAND BRAKES	
				FIG. 125 SAFETY BRAKE LINES GROUP	
1	XDFZZ	11083	8K1691	HOSE ASSY........................... UOC:V53	1
2	XDFZZ	11083	4V9553	TUBE ASSY........................... UOC:V53	1
3	XDFZZ	11083	3VC848	GUARD ASSY.......................... UOC:V53	1
4	MFFZZ	11083	3VC849	HOSE ASSY MAKE FROM HOSE P/N 5P178. UOC:V53	1
5	PAFZZ	11083	4S5414	.SLEEVE,HOSE........................ UOC:V53	2
6	PFFZZ	11083	8S6393	.ELBOW,TUBE TO HOSE................. UOC:V53	1
7	PFFZZ	11083	1P9919	.ELBOW,TUBE TO HOSE................. UOC:V53	1
8	PAFZZ	11083	4S3652	TEE,TUBE............................ UOC:V53	1
9	PAFZZ	11083	5M1198	CLAMP,LOOP.......................... UOC:V53	1
10	XDFZZ	11083	3VC851	TUBE ASSY........................... UOC:V53	1
11	PBFZZ	96906	MS51527A6	ELBOW,TUBE TO BOSS.................. UOC:V53	1
12	PAFZZ	25184	906-737-70	PACKING,PREFORMED................... UOC:V53	2
13	PBFZZ	11083	7J4026	ELBOW,TUBE TO BOSS.................. UOC:V53	1

END OF FIGURE

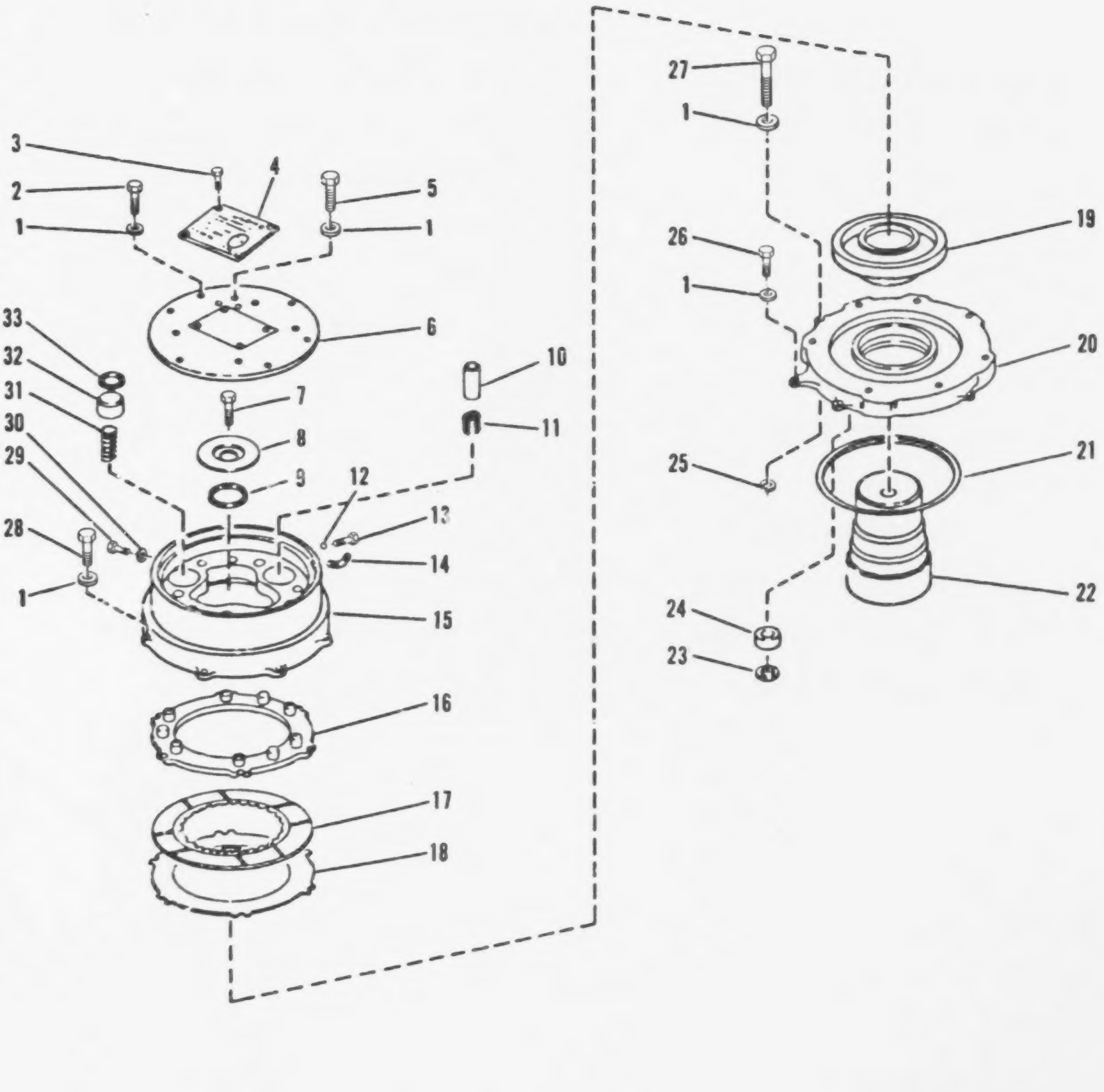

FIGURE 126. PARKING BRAKE ASSEMBLY

(1) ITEM NO	(2) SMR CODE	(3) CAGEC	(4) PART NUMBER	(5) DESCRIPTION AND USABLE ON CODES(UOC)	(6) QTY
				GROUP 1201: HAND BRAKES	
				FIG. 126 PARKING BRAKE ASSEMBLY	
1	PFFZZ	11083	2M849	WASHER,FLAT........................ UOC:V53	24
2	PAFZZ	11083	1D4569	BOLT,MACHINE...................... UOC:V53	6
3	PAFZZ	96906	MS21318-21	SCREW,DRIVE....................... UOC:V53	4
4	XDFZZ	11083	7S4002	PLATE,WARNING..................... UOC:V53	1
5	PAFZZ	11083	0S1621	BOLT,MACHINE...................... UOC:V53	3
6	XDFZZ	11083	7S3996	PLATE, RTNG....................... UOC:V53	1
7	PAFZZ	11083	L1558	BOLT,MACHINE...................... UOC:V53	1
8	PAFZZ	11083	3S1262	RETAINER.......................... UOC:V53	1
9	PAFZZ	11083	2H2665	PACKING,PREFORMED................. UOC:V53	1
10	XDFZZ	11083	7S3998	SPACER............................ UOC:V53	6
11	PAFZZ	11083	7S3997	SPRING,HELICAL COMP............... UOC:V53	9
12	XDFZZ	11083	9M5590	BALL.............................. UOC:V53	1
13	XDFZZ	11083	9M5615	SCREW,BLDR........................ UOC:V53	1
14	XDFZZ	11083	9M5614	FITTING,GREASE.................... UOC:V53	1
15	XDFFF	11083	7S3994	HOUSING ASSY...................... UOC:V53	1
16	PBFZZ	11083	3V4046	CLUTCH HALF,POSITIV............... UOC:V53	1
17	PBFZZ	11083	7S3992	DISK,BRAKE........................ UOC:V53	4
18	PBFZZ	11083	1S57	DISK,CLUTCH....................... UOC:V53	3
19	XDFZZ	11083	1P4085	HUB............................... UOC:V53	1
20	XDFZZ	11083	3P3430	CAGE,BEARING...................... UOC:V53	1
21	PAFZZ	11083	8H8257	PACKING,PREFORMED................. UOC:V53	1
22	XDFZZ	11083	3P3505	SHAFT,BRAKE....................... UOC:V53	1
23	PAFZZ	11083	3B9378	SEAL,PLAIN ENCASED................ UOC:V53	1
24	PBFZZ	11083	3K2518	BEARING,BALL,ANNULA............... UOC:V53	1

(1) ITEM NO	(2) SMR CODE	(3) CAGEC	(4) PART NUMBER	(5) DESCRIPTION AND USABLE ON CODES(UOC)	(6) QTY
25	PBFZZ	80756	RRT-450	RING,RETAINING....................... UOC:V53	1
26	PAFZZ	11083	6H1717	BOLT,MACHINE........................ UOC:V53	2
27	PAFZZ	11083	1A5822	BOLT,MACHINE........................ UOC:V53	7
28	PAFZZ	11083	9H8260	BOLT,MACHINE........................ UOC:V53	6
29	PBFZZ	11083	9S4191	PLUG,MACHINE THREAD................. UOC:V53	2
30	PAFZZ	25184	906-737-70	PACKING,PREFORMED................... UOC:V53	2
31	XDFZZ	11083	7S3999	SPRING.............................. UOC:V53	3
32	XDFZZ	11083	7S4000	PISTON.............................. UOC:V53	3
33	PAFZZ	11083	7S4001	SEAL,PLAIN.......................... UOC:V53	3

END OF FIGURE

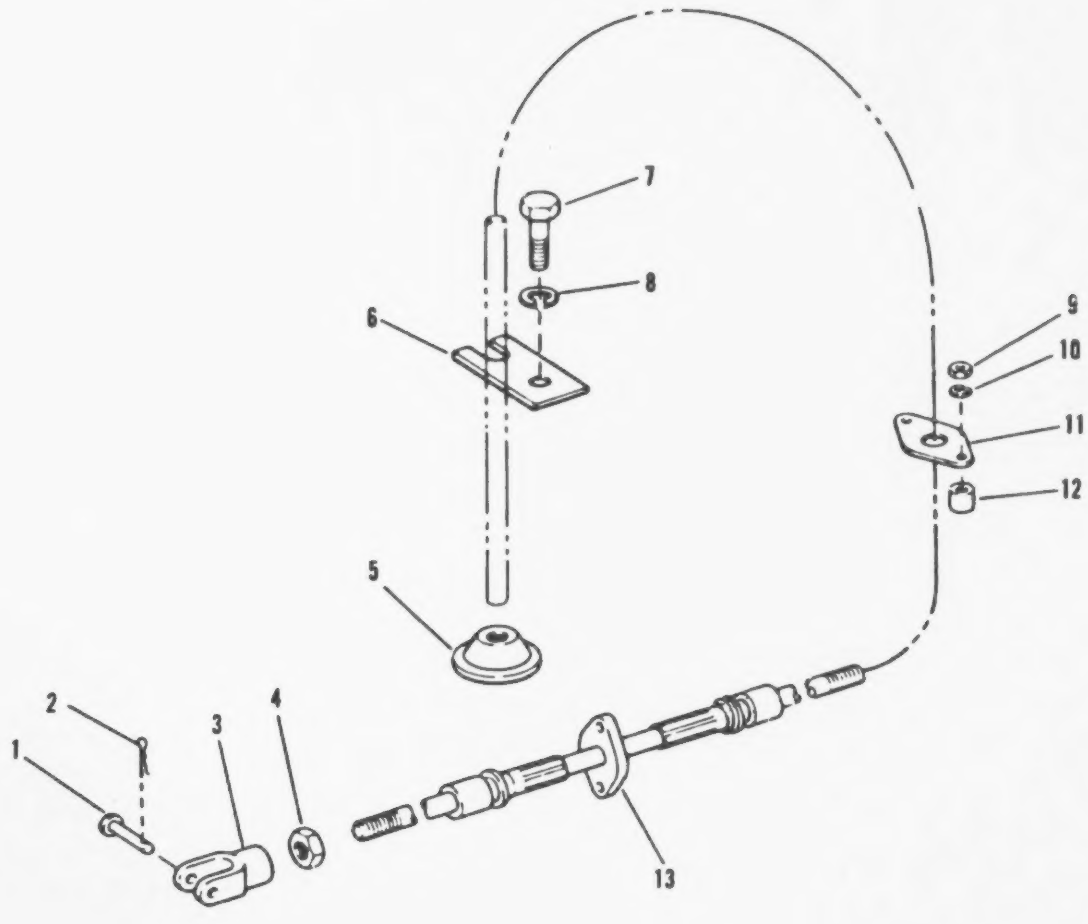

FIGURE 127. BRAKE CONTROL

(1) ITEM NO	(2) SMR CODE	(3) CAGEC	(4) PART NUMBER	(5) DESCRIPTION AND USABLE ON CODES(UOC)	(6) QTY
				GROUP 1201: HAND BRAKES	
				FIG. 127 BRAKE CONTROL	
1	PAOZZ	11083	4J5325	PIN,STRAIGHT,HEADED.................. UOC:V53	1
2	PAOZZ	11083	3B4607	PIN,COTTER........................... UOC:V53	1
3	PAOZZ	11083	2M4036	CLEVIS,ROD END....................... UOC:V53	1
4	PAOZZ	72915	120613	NUT,PLAIN,HEXAGON.................... UOC:V53	1
5	PAOZZ	80813	250-702	KNOB................................. UOC:V53	1
6	XDOZZ	11083	1V5774	STRIP................................ UOC:V53	1
7	PAOZZ	11083	0L1351	BOLT,MACHINE......................... UOC:V53	1
8	PAOZZ	96906	MS35338-45	WASHER,LOCK.......................... UOC:V53	1
9	PAOZZ	24617	426376	NUT,PLAIN,HEXAGON.................... UOC:V53	2
10	PAOZZ	11083	1H3338	LOCKWASHER........................... UOC:V53	2
11	XDOZZ	11083	2V2538	PLATE................................ UOC:V53	1
12	PBOZZ	11083	1B7904	SPACER............................... UOC:V53	2
13	PAOZZ	06970	773-357-100-25	CONTROL ASSEMBLY,PU.................. UOC:V53	1

END OF FIGURE

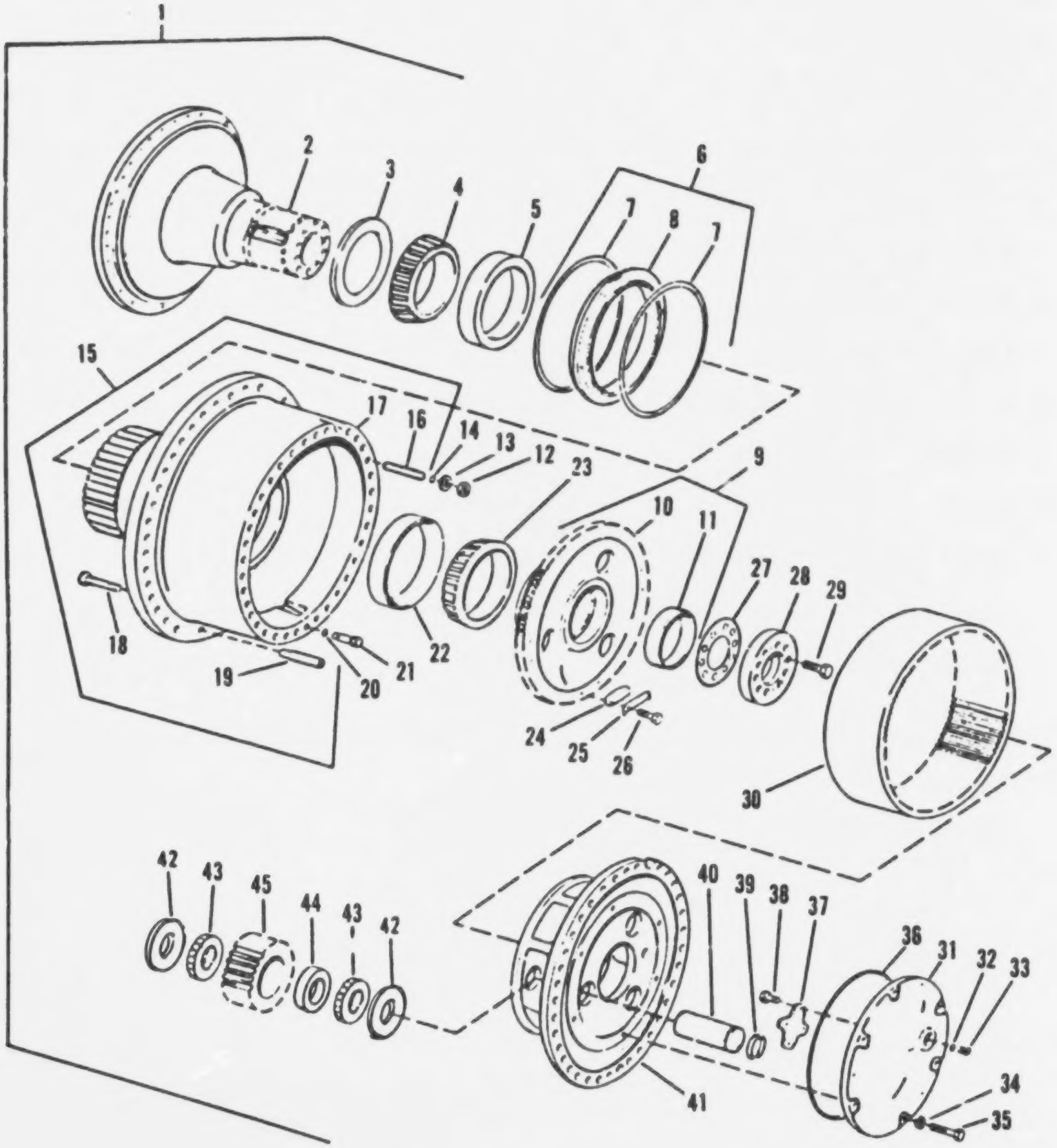

FIGURE 128. FINAL DRIVE AND BRAKE ASSEMBLY

(1) ITEM NO	(2) SMR CODE	(3) CAGEC	(4) PART NUMBER	(5) DESCRIPTION AND USABLE ON CODES(UOC)	(6) QTY
				GROUP 1202: SERVICE BRAKES	
				FIG. 128 FINAL DRIVE AND BRAKE ASSEMBLY	
1	XDFFF	11083	1V5669	WHEEL GRP,FINAL DR.................. UOC:V53	1
2	XDFZZ	11083	1V4975	.SPINDLE,WHEEL...................... UOC:V53	1
3	XDFZZ	11083	5V5856	.SPACER............................. UOC:V53	1
4	PAFZZ	11083	1P9593	.CONE AND ROLLERS,TA................ UOC:V53	1
5	PAFZZ	11083	1P9594	.CUP,TAPERED ROLLER................. UOC:V53	1
6	PAFZZ	11083	9G5323	.KIT,SERVICE........................ UOC:V53	1
7	XAFZZ	11083	5P4858	..RING,TORIC SEALING................ UOC:V53	2
8	XAFZZ	11083	4D4471	..SEAL RING......................... UOC:V53	2
9	XDFFF	11083	8K0068	.HUB ASSY........................... UOC:V53	1
10	XAFZZ	11083	9K0101	..HUB,INT GEAR...................... UOC:V53	1
11	XAFZZ	11083	8K0079	..BUSHING........................... UOC:V53	1
12	PAFZZ	11083	2J3506	.NUT,PLAIN,HEXAGON.................. UOC:V53	34
13	PAFZZ	11083	2S0115	.WASHER,FLAT........................ UOC:V53	34
14	PAFZZ	11083	8S6251	.PACKING,PREFORMED.................. UOC:V53	1
15	XDFFF	11083	1V5804	.WHEEL ASSY......................... UOC:V53	1
16	XDFZZ	11083	2P1303	..STUD,TPRLK,CONT THD............... UOC:V53	34
17	XAFZZ	11083	1V4976	..WHEEL............................. UOC:V53	1
18	XDFZZ	11083	9K7807	..STUD,HD........................... UOC:V53	40
19	XDFZZ	11083	3V7866	..PIN,STR,HDLS...................... UOC:V53	1
20	PAFZZ	25184	906-737-70	.PACKING,PREFORMED.................. UOC:V53	1
21	XDFZZ	11083	5K7696	.PLUG............................... UOC:V53	1
22	PAFZZ	11083	2D6511	.CUP,TAPERED ROLLER................. UOC:V53	1
23	PAFZZ	11083	2P8353	.CONE AND ROLLERS,TA................ UOC:V53	1
24	PAFZZ	11083	4D3173	.RING,RETAINING.....................	4

(1) ITEM NO	(2) SMR CODE	(3) CAGEC	(4) PART NUMBER	(5) DESCRIPTION AND USABLE ON CODES(UOC)	(6) QTY
				UOC:V53	
25	PBFZZ	11083	4F7356	.LOCKING PLATE,NUT A................. UOC:V53	4
26	PAFZZ	11083	0S1621	.BOLT,MACHINE......................... UOC:V53	8
27	PAFZZ	11083	8K66	.SHIM................................. UOC:V53	1
28	XDFZZ	11083	8K0003	.RING................................. UOC:V53	1
29	PAFZZ	11083	1A8537	.BOLT,MACHINE......................... UOC:V53	10
30	XDFZZ	11083	9K0100	.GEAR,RING............................ UOC:V53	1
31	XDFZZ	11083	3V5953	.COVER................................ UOC:V53	1
32	PAFZZ	11083	7M8485	.SEAL,ADAPTER,MOTOR................... UOC:V53	1
33	PBFZZ	11083	9S4181	.PLUG,MACHINE THREAD.................. UOC:V53	1
34	PAFZZ	96906	MS35338-48	.WASHER,LOCK.......................... UOC:V53	6
35	PAFZZ	11083	7B3235	.BOLT,MACHINE......................... UOC:V53	6
36	PAFZZ	11083	7S8561	.PACKING,PREFORMED.................... UOC:V53	1
37	PAFZZ	11083	2G4553	.PLATE,RETAINING,SHA.................. UOC:V53	1
38	PAFZZ	11083	8D3883	.BOLT,MACHINE......................... UOC:V53	4
39	XDFZZ	11083	7H0308	.RING,RING............................ UOC:V53	3
40	XDFZZ	11083	2V4148	.SHAFT,PLANET......................... UOC:V53	3
41	XDFZZ	11083	2V4149	.CARRIER,PLANET....................... UOC:V53	1
42	PAFZZ	11083	8D3901	.WASHER,FLAT.......................... UOC:V53	6
43	PAFZZ	11083	5D3632	.ROLLER ASSEMBLY,JOU.................. UOC:V53	6
44	XDFZZ	11083	8K0067	.SPACER............................... UOC:V53	3
45	XDFZZ	11083	8K0004	.GEAR,PLANET.......................... UOC:V53	3

END OF FIGURE

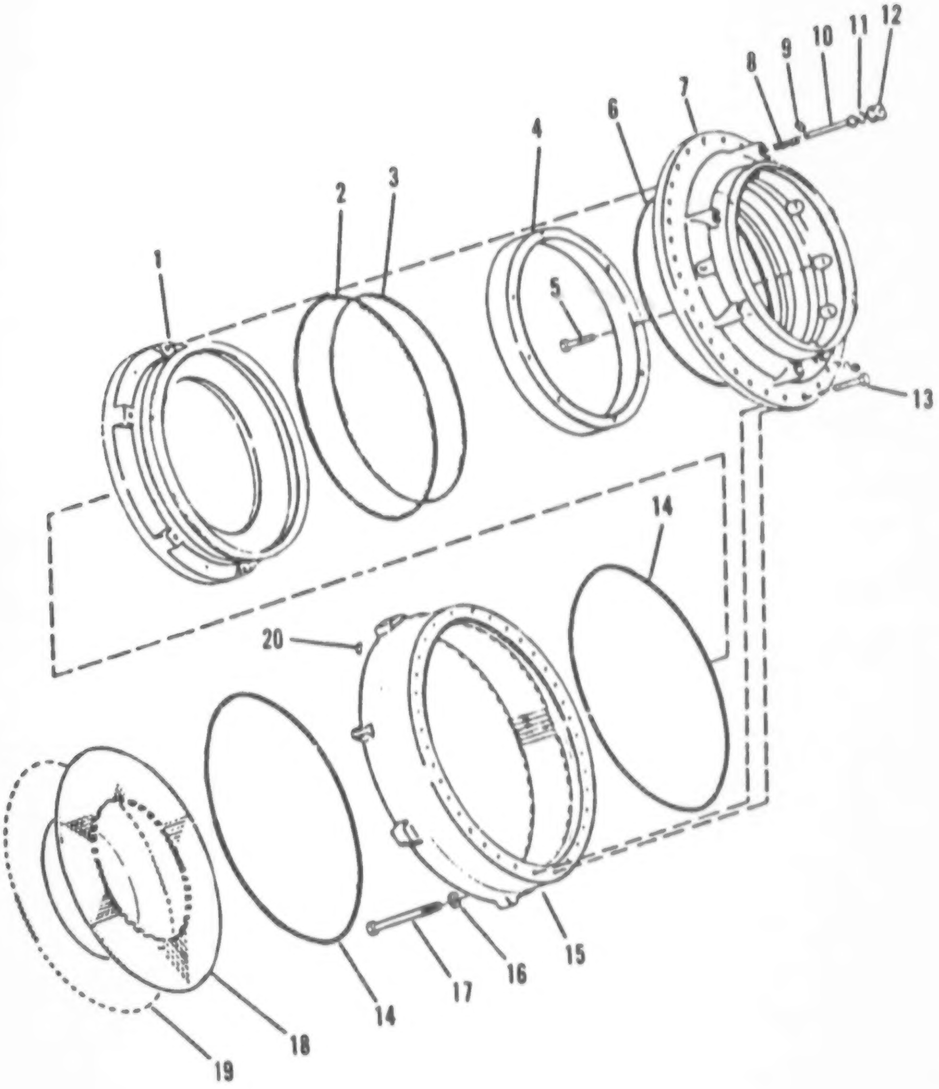

FIGURE 129. SERVICE BRAKE ASSEMBLY

(1) ITEM NO	(2) SMR CODE	(3) CAGEC	(4) PART NUMBER	(5) DESCRIPTION AND USABLE ON CODES(UOC)	(6) QTY
				GROUP 1202: SERVICE BRAKES	
				FIG. 129 SERVICE BRAKE ASSEMBLY	
1	XDFZZ	11083	4V7725	PISTON.............................. UOC:V53	1
2	XDFZZ	11083	5D6295	PACKING,O-RING...................... UOC:V53	1
3	XDFZZ	11083	5D6294	PACKING,O-RING...................... UOC:V53	1
4	XDFZZ	11083	1V6683	SLEEVE.............................. UOC:V53	1
5	PAFZZ	11083	5J5793	BOLT,MACHINE........................ UOC:V53	8
6	PBFZZ	11083	4D1577	PACKING,PREFORMED................... UOC:V53	1
7	XDFZZ	11083	4V7726	HOUSING,PISTON...................... UOC:V53	1
8	XDFZZ	11083	6M8252	SPRING,PISTON RETN.................. UOC:V53	6
9	XDFZZ	11083	6M9155	PIN,STR,HDLS........................ UOC:V53	6
10	XDFZZ	11083	1V7403	GUIDE,SPRING........................ UOC:V53	6
11	PAFZZ	99517	A180-11SMILP2573 2	PACKING,PREFORMED................... UOC:V53	6
12	XDFZZ	30780	12HP5N	PLUG,MACHINE THREAD................. UOC:V53	6
13	PAFZZ	11083	0S1568	BOLT,MACHINE........................ UOC:V53	2
14	PBFZZ	11083	9M5892	PACKING,PREFORMED................... UOC:V53	2
15	XDFZZ	11083	1V5439	HOUSING,BRAKE DISC.................. UOC:V53	1
16	PFFZZ	11083	2M849	WASHER,FLAT......................... UOC:V53	34
17	PAFZZ	11083	2A1531	BOLT,MACHINE........................ UOC:V53	34
18	XDFZZ	11083	5D6329	DISK,BRAKE.......................... UOC:V53	7
19	XDFZZ	11083	7D7504	PLATE,OUTER......................... UOC:V53	8
20	PBFZZ	11083	4H8380	PIN,STRAIGHT,HEADLE................. UOC:V53	3

END OF FIGURE

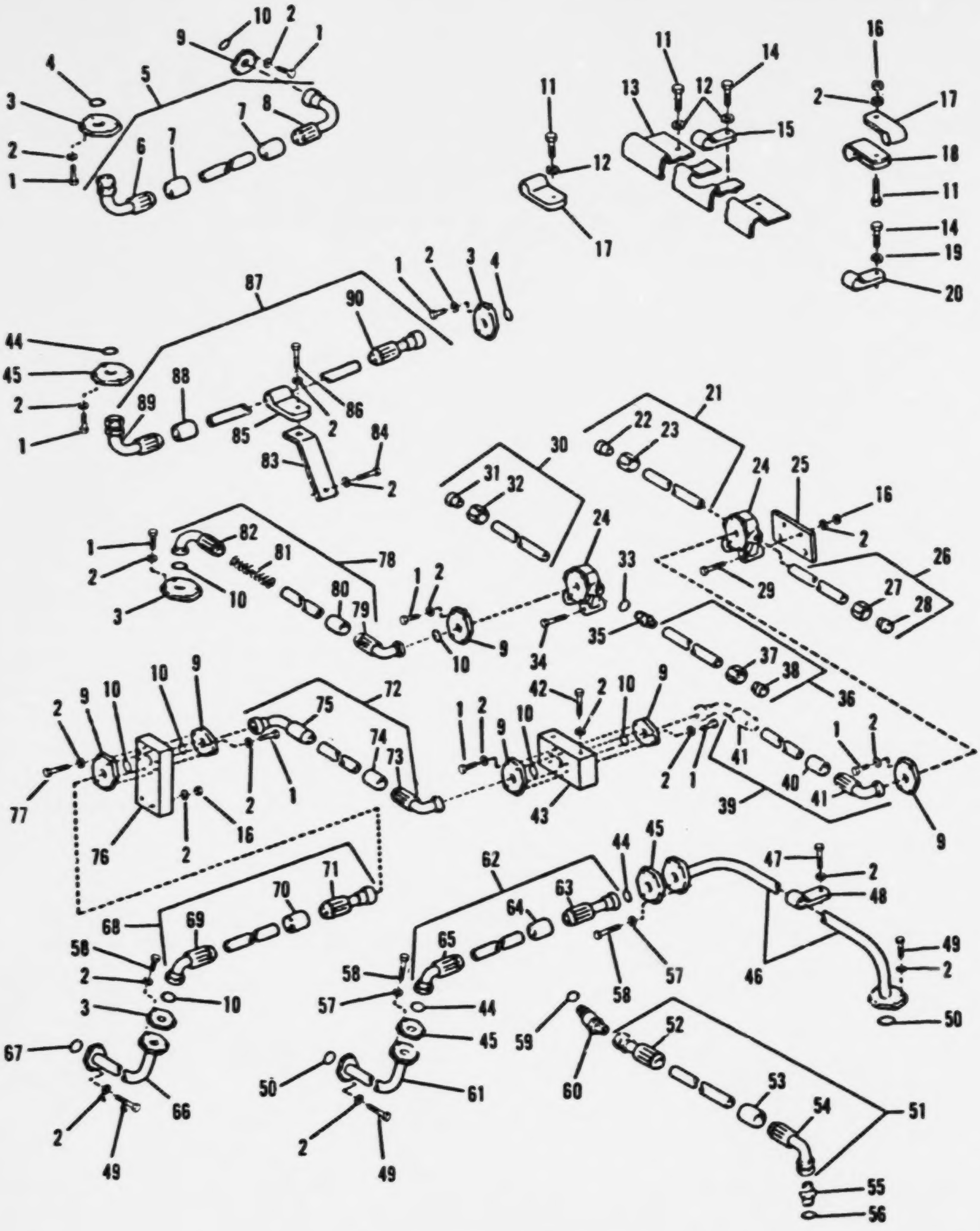

FIGURE 130. SERVICE BRAKE LINES

(1) ITEM NO	(2) SMR CODE	(3) CAGEC	(4) PART NUMBER	(5) DESCRIPTION AND USABLE ON CODES(UOC)	(6) QTY
				GROUP 1204: HYDRAULIC BRAKE SYSTEM	
				FIG. 130 SERVICE BRAKE LINES	
1	PAFZZ	11083	0S1588	BOLT.............................. UOC:V53	34
2	PAFZZ	11083	5M2894	WASHER,FLAT........................ UOC:V53	76
3	PBFZZ	11083	1P4577	FLANGE,SPLIT,HALF.................. UOC:V53	8
4	PAFZZ	11083	4J0520	PACKING,PREFORMED.................. UOC:V53	4
5	MFFZZ	11083	4V8370	HOSE ASSY MAKE FROM HOSE, NON METALLIC P/N 9S247................ UOC:V53	1
6	XDFZZ	11083	7S1712	.STEM ASSY,COLLET.................. UOC:V53	1
7	PBFZZ	11083	3S7166	.PLUNGER,DETENT.................... UOC:V53	2
8	PBFZZ	11083	3S8360	.STEM.............................. UOC:V53	1
9	PBFZZ	11083	1P4576	FLANGE............................. UOC:V53	14
10	XDFZZ	11083	4J5267	PACKING,PREFORMED.................. UOC:V53	7
11	PAFZZ	11083	0L1351	BOLT,MACHINE....................... UOC:V53	7
12	XDFZZ	11083	4S9191	WASHER,FLAT........................ UOC:V53	3
13	XDFZZ	11083	4V5260	PLATE.............................. UOC:V53	2
14	PAFZZ	96906	MS18154-58	SCREW,CAP,HEXAGON H................ UOC:V53	4
15	PAFZZ	11083	1B3057	CLIP,SPRING TENSION................ UOC:V53	2
16	PAFZZ	15564	1377A	NUT,PLAIN,HEXAGON.................. UOC:V53	5
17	PAFZZ	11083	5D4204	CLAMP,LOOP......................... UOC:V53	1
18	PAFZZ	11083	3S3911	CLAMP,LOOP......................... UOC:V53	1
19	PAFZZ	96906	MS35338-45	WASHER,LOCK........................ UOC:V53	2
20	PAFZZ	11083	4B0418	CLIP............................... UOC:V53	2
21	PAFZZ	11083	2V2200	TUBE ASSEMBLY,METAL................ UOC:V53	1
22	PBFZZ	96906	MS51533B8	.SLEEVE,FLARED,TUBE................ UOC:V53	2
23	PFFZZ	30780	8BTXS	.NUT,TUBE COUPLING................. UOC:V53	2
24	XDFZZ	11083	1V8074	JUNCTION...........................	2

best copy available

Reproduced from poor document.

(1) ITEM NO	(2) SMR CODE	(3) CAGEC	(4) PART NUMBER	(5) DESCRIPTION AND USABLE ON CODES(UOC)	(6) QTY
				UOC:V53	
24	XDFZZ	11083	1V8074	JUNCTION............................. UOC:V53	2
25	XDFZZ	11083	2V7964	PLATE................................ UOC:V53	1
26	PAFZZ	11083	2V2199	TUBE ASSEMBLY,METAL.................. UOC:V53	1
27	PFFZZ	30780	8BTXS	.NUT,TUBE COUPLING................... UOC:V53	2
28	PBFZZ	96906	MS51533B8	.SLEEVE,FLARED,TUBE.................. UOC:V53	2
29	PAFZZ	11083	L2C7C	BOLT,MACHINE......................... UOC:V53	2
30	XDFFF	11083	2V2198	TUBE ASSY............................ UOC:V53	1
31	PBFZZ	96906	MS51533B8	.SLEEVE,FLARED,TUBE.................. UOC:V53	2
32	PFFZZ	30780	8BTXS	.NUT,TUBE COUPLING................... UOC:V53	2
33	PAFZZ	81349	M83248-2-908	PACKING,PREFORMED.................... UOC:V53	5
34	PAFZZ	11083	L1143	BOLT,MACHINE......................... UOC:V53	2
35	PBFZZ	11083	8MC5C5	ADAPTER,STRAIGHT,TU.................. UOC:V53	4
36	XDFFF	11083	2V2197	TUBE ASSY............................ UOC:V53	1
37	PFFZZ	30780	8BTXS	.NUT,TUBE COUPLING................... UOC:V53	2
38	PBFZZ	96906	MS51533B8	.SLEEVE,FLARED,TUBE.................. UOC:V53	2
39	MFFZZ	11083	3V7899	HOSE ASSY MAKE FROM HOSE, NON METALLIC P/N 9S247................. UOC:V53	1
40	PBFZZ	11083	3S7166	.PLUNGER,DETENT...................... UOC:V53	2
41	PBFZZ	11083	3S8363	.STEM ASSEMBLY....................... UOC:V53	2
42	PAFZZ	11083	T65	BOLT,MACHINE......................... UOC:V53	2
43	XDFZZ	11083	2V2175	MANIFOLD............................. UOC:V53	1
44	PAFZZ	11083	4J0522	PACKING,PREFORMED.................... UOC:V53	4
45	PBFZZ	11083	1P4578	FLANGE,HALF.......................... UOC:V53	6
46	XDFZZ	11083	2V2182	TUBE ASSY............................ UOC:V53	1
47	PAFZZ	11083	0L1351	BOLT,MACHINE......................... UOC:V53	3
48	PAFZZ	11083	6L3351	CLAMP,LOOP........................... UOC:V53	2

(1) ITEM NO	(2) SMR CODE	(3) CAGEC	(4) PART NUMBER	(5) DESCRIPTION AND USABLE ON CODES(UOC)	(6) QTY
49	PAFZZ	11083	0S1571	BOLT UOC:V53	14
50	PAFZZ	11083	1P3704	SEAL UOC:V53	2
51	MFFZZ	11083	2V7967	HOSE ASSY MAKE FROM HOSE P/N 5P178. UOC:V53	1
52	PAFZZ	11083	8S6417	.ADAPTER,STRAIGHT,TU UOC:V53	1
53	PAFZZ	11083	4S5414	.SLEEVE,HOSE UOC:V53	2
54	PFFZZ	11083	8S6393	.ELBOW,TUBE TO HOSE UOC:V53	1
55	PAFZZ	22031	6400-6-4	ADAPTER,STRAIGHT,TU UOC:V53	1
56	PAFZZ	11083	3J7354	PACKING,PREFORMED UOC:V53	1
57	PAFZZ	11083	5P8244	WASHER,FLAT UOC:V53	12
58	PAFZZ	11083	T320	BOLT,MACHINE UOC:V53	12
59	PAFZZ	25184	906-737-70	PACKING,PREFORMED UOC:V53	1
60	PBFZZ	11083	307942	ELBOW,TUBE TO BOSS UOC:V53	1
61	XDFZZ	11083	2V4719	TUBE,ASSY UOC:V53	1
62	MFFFF	11083	2V2180	HOSE ASSY MAKE FROM HOSE P/N 5P181. UOC:V53	1
63	PFFZZ	11083	7S0570	.ADAPTER,STRAIGHT,FL UOC:V53	1
64	PBFZZ	11083	3S7252	.SLEEVE UOC:V53	2
65	PFFZZ	11083	7S0574	.ELBOW,FLANGE TO HOS UOC:V53	1
66	XDFZZ	11083	2V2184	TUBE ASSY UOC:V53	1
67	PAFZZ	11083	1P3703	PACKING,PREFORMED UOC:V53	1
68	PAFZZ	11083	2V2176	HOSE ASSY UOC:V53	1
69	PBFZZ	11083	3S8360	.STEM UOC:V53	1
70	PBFZZ	11083	3S7166	.PLUNGER,DETENT UOC:V53	2
71	XDFZZ	11083	8S4591	.STEM ASSY UOC:V53	1
72	PAFZZ	11083	2V2179	HOSE ASSY UOC:V53	1
73	PBFZZ	11083	3S8363	.ELBOW,FLANGE TO HOS UOC:V53	1
74	PBFZZ	11083	3S7166	.PLUNGER,DETENT UOC:V53	2

(1) ITEM NO	(2) SMR CODE	(3) CAGEC	(4) PART NUMBER	(5) DESCRIPTION AND USABLE ON CODES(UOC)	(6) QTY
75	PBFZZ	11083	3S8360	.STEM................................ UOC:V53	1
76	XDFZZ	11083	1V9747	MANIFOLD............................. UOC:V53	1
77	PAFZZ	96906	MS90728-63	SCREW,CAP,HEXAGON H.................. UOC:V53	8
78	PAFZZ	11083	2V2178	HOSE ASSY............................ UOC:V53	1
79	PBFZZ	11083	3S8363	.ELBOW,FLANGE TO HOS................. UOC:V53	1
80	PBFZZ	11083	3S7166	.PLUNGER,DETENT...................... UOC:V53	2
81	XDFZZ	11083	5P7533	.GUARD,FLAT,ARMOR.................... UOC:V53	1
82	XDFZZ	11083	7S1712	.STEM ASSY,COLLET.................... UOC:V53	1
83	XDFZZ	11083	2V7963	ANGLE ASSY........................... UOC:V53	1
84	PAFZZ	11083	0S1591	SCREW................................ UOC:V53	1
85	PAFZZ	75272	COV-2113	CLAMP,LOOP........................... UOC:V53	4
86	PAFZZ	96906	MS18154-58	SCREW,CAP,HEXAGON H.................. UOC:V53	1
87	PAFZZ	11083	2V7966	HOSE ASSY MAKE FROM HOSE P/N 9S247. UOC:V53	1
88	PBHZZ	11083	3S7166	.PLUNGER,DETENT...................... UOC:V53	2
89	XDHZZ	11083	5S5287	.STEM ASSY,COLLET.................... UOC:V53	1
90	XDHZZ	11083	5S3049	.STEM ASSY,COLLET.................... UOC:V53	1

END OF FIGURE

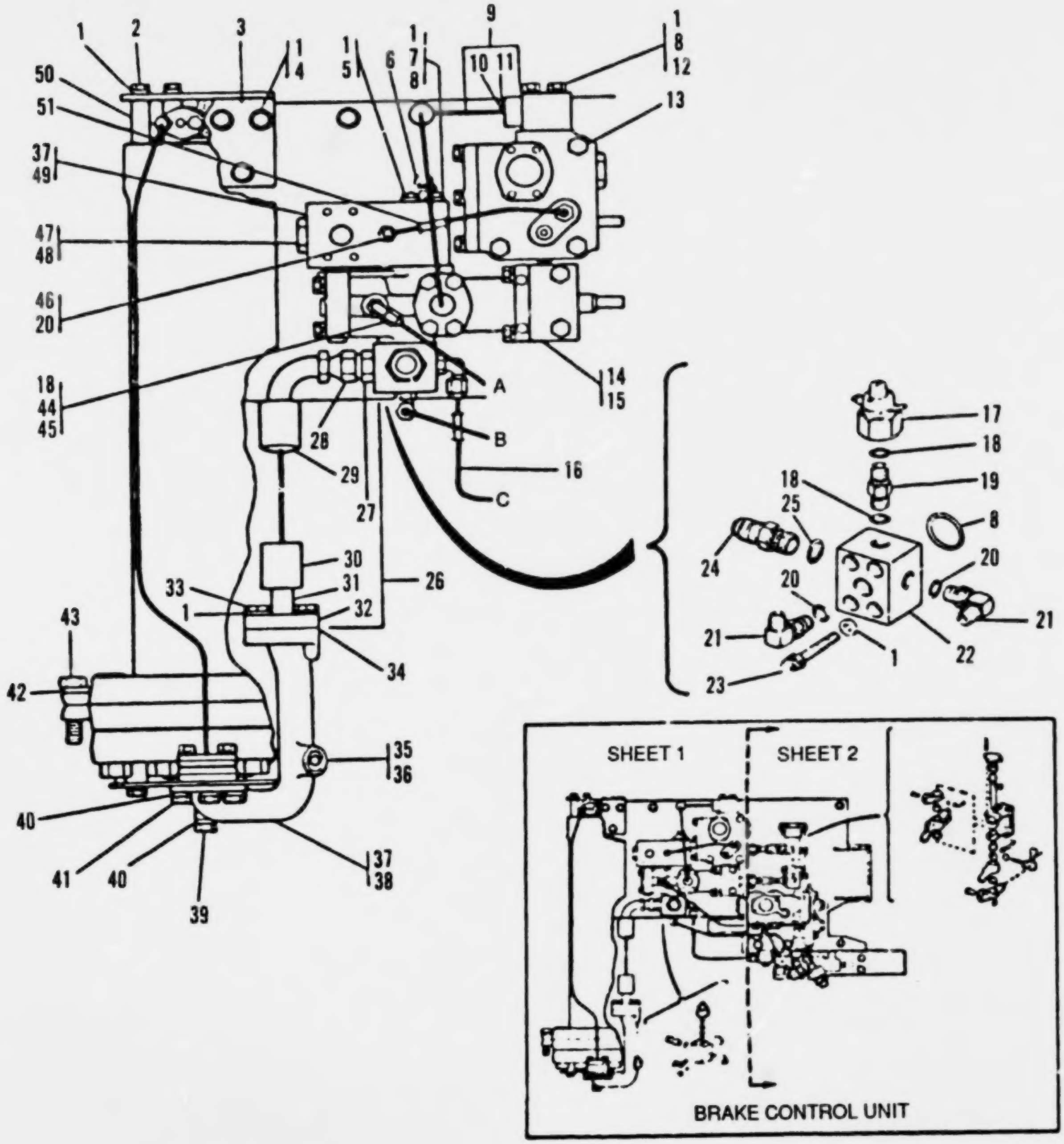

FIGURE 131. SERVICE BRAKE CONTROL ASSEMBLY

(1) ITEM NO	(2) SMR CODE	(3) CAGEC	(4) PART NUMBER	(5) DESCRIPTION AND USABLE ON CODES(UOC)	(6) QTY
				GROUP 1204: HYDRAULIC BRAKE SYSTEM	
				FIG. 131 SERVICE BRAKE CONTROL ASSEMBLY	
1	PAFZZ	11083	5M2894	WASHER,FLAT............................ UOC:V53	24
2	XBFZZ	11083	2M6835	PIPE................................... UOC:V53	2
3	XDFZZ	11083	2V3767	PLATE ASSY............................. UOC:V53	1
4	PAFZZ	11083	0S1588	BOLT................................... UOC:V53	3
5	PAFZZ	11083	S1608	BOLT,MACHINE........................... UOC:V53	4
6	PAFZZ	11083	7B4448	SWITCH,PRESSURE........................ UOC:V53	1
7	PAFZZ	11083	0S1571	BOLT................................... UOC:V53	4
8	PAFZZ	11083	1P3703	PACKING,PREFORMED...................... UOC:V53	3
9	XDFFF	11083	1V2830	TUBE ASSY.............................. UOC:V53	1
10	PAFZZ	11083	9S4183	.PLUG,ASSEMBLY......................... UOC:V53	1
11	PAFZZ	99517	A180-119MILP25732	.PACKING,PREFORMED..................... UOC:V53	1
12	PAFZZ	11083	L2070	BOLT,MACHINE........................... UOC:V53	4
13	PAFZZ	11083	S1573	BOLT,MACHINE........................... UOC:V53	3
14	PAFZZ	11083	1B2886	BOLT,MACHINE........................... UOC:V53	2
15	XDFZZ	11083	9J4080	VALVE GRP.............................. UOC:V53	1
16	XDFFF	11083	2V4359	TUBE ASSY.............................. UOC:V53	1
17	PAFZZ	11083	9W-2653	SWITCH,PRESSURE........................ UOC:V53	2
18	PAFZZ	11083	3J7354	PACKING,PREFORMED...................... UOC:V53	5
19	XDFZZ	11083	2V3173	ADAPTER................................ UOC:V53	1
20	PAFZZ	25184	906-737-70	PACKING,PREFORMED...................... UOC:V53	8
21	PAFZZ	96906	MS51527A6	ELBOW,TUBE TO BOSS..................... UOC:V53	1
22	XDFZZ	11083	2V5707	MANIFOLD............................... UOC:V53	1
23	PAFZZ	11083	1N7284	BOLT,MACHINE........................... UOC:V53	4
24	PFFZZ	56161	6945407	ADAPTER,STRAIGHT,TU....................	1

(1) ITEM NO	(2) SMR CODE	(3) CAGEC	(4) PART NUMBER	(5) DESCRIPTION AND USABLE ON CODES(UOC)	(6) QTY
				UOC:V53	
25	PAFZZ	99517	A180-11SMILP2573 2	PACKING,PREFORMED..................	1
				UOC:V53	
26	XDFFF	11083	2V5706	HOSE ASSY..........................	1
				UOC:V53	
27	PAFZZ	99517	A180-11SMILP2573 2	PACKING,PREFORMED..................	1
				UOC:V53	
28	XBFZZ	11083	2R6276	CONNECTOR..........................	1
				UOC:V53	
29	XDFZZ	11083	8S6389	.COUPLING ASSY.....................	1
				UOC:V53	
30	PBFZZ	11083	3S7166	.PLUNGER,DETENT....................	2
				UOC:V53	
31	PBFZZ	11083	5S5283	.STEM ASSEMBLY.....................	1
				UOC:V53	
32	PAFZZ	11083	4J0520	.PACKING,PREFORMED.................	1
				UOC:V53	
33	PAFZZ	96906	MS90728-63	SCREW,CAP,HEXAGON H................	6
				UOC:V53	
34	PAFZZ	11083	1P4577	FLANGE,SPLIT,HALF..................	2
				UOC:V53	
35	PAFZZ	11083	9S8005	PLUG,MACHINE THREAD................	1
				UOC:V53	
36	PAFZZ	81349	M83248-2-908	PACKING,PREFORMED..................	1
				UOC:V53	
37	PAFZZ	11083	1P3704	SEAL...............................	5
				UOC:V53	
38	XDFZZ	11083	2V6778	ELBOW..............................	1
				UOC:V53	
39	PAFZZ	11083	1D4556	BOLT,MACHINE.......................	1
				UOC:V53	
40	XDFZZ	11083	4S9191	WASHER,FLAT........................	4
				UOC:V53	
41	PAFZZ	96906	MS90728-89	SCREW,CAP,HEXAGON H................	3
				UOC:V53	
42	PAFZZ	11083	2S7593	WASHER,FLAT........................	2
				UOC:V53	
43	PAFZZ	11083	S1625	SCREW,CAP,HEXAGON H................	2
				UOC:V53	
44	PAFZZ	11083	3O7946	ELBOW,TUBE TO BOSS.................	1
				UOC:V53	
45	XDFFF	11083	2V5704	TUBE ASSY..........................	1
				UOC:V53	
46	PAFZZ	96906	MS51525A6	ADAPTER,STRAIGHT,TU................	5
				UOC:V53	
47	PAFZZ	81349	M83248/2-914	PACKING,PREFORMED..................	1
				UOC:V53	
48	PAFZZ	11083	9S4188	PLUG...............................	1
				UOC:V53	
49	XDFZZ	11083	1V2832	MANIFOLD...........................	1
				UOC:V53	
50	XDFFF	11083	2V4400	TUBE ASSY..........................	1

(1) ITEM NO	(2) SMR CODE	(3) CAGEC	(4) PART NUMBER	(5) DESCRIPTION AND USABLE ON CODES(UOC)	(6) QTY
				UOC:V53	
51	PAFZZ	11083	0S1619	BOLT,MACHINE........................	2
				UOC:V53	

END OF FIGURE

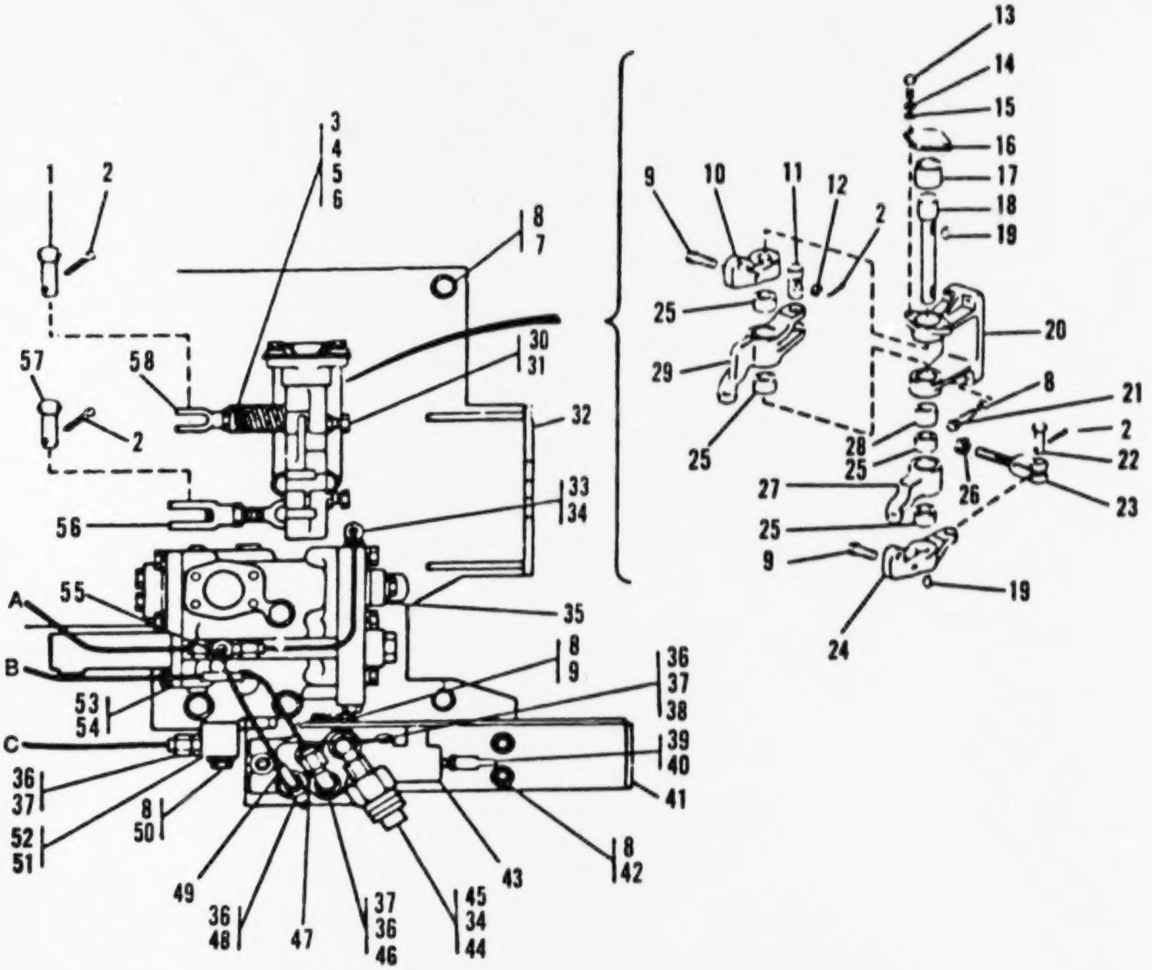

FIGURE 132. SERVICE BRAKE CONTROL ASSEMBLY

(1) ITEM NO	(2) SMR CODE	(3) CAGEC	(4) PART NUMBER	(5) DESCRIPTION AND USABLE ON CODES(UOC)	(6) QTY
				GROUP 1204: HYDRAULIC BRAKE SYSTEM	
				FIG. 132 SERVICE BRAKE CONTROL ASSEMBLY	
1	PAFZZ	11083	1B0676	PIN................................ UOC:V53	1
2	PAFZZ	96906	MS24665-353	PIN,COTTER......................... UOC:V53	6
3	XDFZZ	11083	2V7226	RETAINER........................... UOC:V53	2
4	XDFZZ	11083	2V3764	ROD................................ UOC:V53	1
5	PAFZZ	96906	MS35691-21	.NUT,PLAIN,HEXAGON................. UOC:V53	1
6	PBFZZ	11083	2P5677	SPRING............................. UOC:V53	1
7	PAFZZ	11083	0S1594	BOLT,MACHINE....................... UOC:V53	3
8	PAFZZ	11083	5M2894	WASHER FLAT........................	24
9	PAFZZ	96906	MS90728-63	SCREW, CAP, HEX H..................	6
10	XDFZZ	11083	2V0003	LEVER.............................. UOC:V53	1
11	PAFZZ	11083	9F8910	PIN,STRAIGHT,HEADLE................ UOC:V53	1
12	PAFZZ	11083	1B4442	NUT,PLAIN,CASTELLAT................ UOC:V53	1
13	PAFZZ	96906	MS90728-5	SCREW,CAP,HEXAGON H................ UOC:V53	2
14	XDFZZ	83355	1-4INNVYLKWASH	WASHER,LOCK........................ UOC:V53	2
15	PAFZZ	96906	MS27183-10	WASHER,FLAT........................ UOC:V53	2
16	XDFZZ	11083	5J5437	COVER.............................. UOC:V53	1
17	XDFZZ	11083	9S6465	BEARING,ROLLER,NEED................ UOC:V53	1
18	XDFZZ	11083	2V3761	SHAFT.............................. UOC:V53	1
19	PAFZZ	96906	MS35756-10	KEY,WOODRUFF....................... UOC:V53	2
20	XDFZZ	11083	2V3717	BRACKET............................ UOC:V53	1
21	PAFZZ	11083	0S1591	SCREW.............................. UOC:V53	4
22	PAFZZ	11083	0S0175	PIN................................ UOC:V53	2
23	XDFZZ	11083	2D9860	ROD................................ UOC:V53	1
24	XDFZZ	11083	2V0014	LEVER.............................. UOC:V53	1
25	XDFZZ	11083	2P9858	BEARING,NEEDLE RLR.................	2

(1) ITEM NO	(2) SMR CODE	(3) CAGEC	(4) PART NUMBER	(5) DESCRIPTION AND USABLE ON CODES(UOC)	(6) QTY
				UOC:V53	
26	PAFZZ	11083	1B4430	NUT,PLAIN,HEXAGON....................	1
				UOC:V53	
27	XDFZZ	11083	2V0016	LEVER............................	1
				UOC:V53	
28	PFFZZ	11083	6D3787	BEARING,ROLLER...................	1
				UOC:V53	
29	XDFZZ	11083	2V0015	LEVER............................	1
				UOC:V53	
30	PAFZZ	11083	2A1396	.SCREW,CAP,HEXAGON H..............	2
				UOC:V53	
31	PAFZZ	96906	MS35691-17	.NUT,PLAIN,HEXAGON................	2
				UOC:V53	
32	XDFZZ	11083	2V3769	PLATE ASSY.......................	1
				UOC:V53	
33	PAFZZ	11083	307946	ELBOW,TUBE TO BOSS................	1
				UOC:V53	
33	PAFZZ	11083	0L1351	BOLT,MACHINE......................	2
				UOC:V53	
34	PAFZZ	11083	3J7354	PACKING, PREFORMED................	5
35	XDFFF	11083	2V5705	TUBE ASSY.........................	1
				UOC:V53	
36	PAFZZ	11083	3J1907	PACKING, PREFORMED................	8
37	PAFZZ	11083	4K1388	SEAL, CONNECTOR TBE...............	1
38	PFFZZ	11083	619258	TEE, TUBE.........................	1
39	XDFZZ	11083	4K3777	EYE,ADJUSTMENT....................	1
				UOC:V53	
40	PAFZZ	11083	9M1311	NUT,PLAIN,HEXAGON.................	1
				UOC:V53	
41	XDFZZ	11083	2V3763	BRACKET...........................	1
				UOC:V53	
42	PAFZZ	15564	1377A	NUT,PLAIN,HEXAGON.................	3
				UOC:V53	
43	XDFFF	11083	3G2228	VALVE GRP,BRAKE...................	1
				UOC:V53	
44	XDFZZ	11083	2V3172	ADAPTER...........................	1
				UOC:V53	
45	PAFZZ	11083	1V2836	SWITCH, PRESSURE..................	2
46	PAFZZ	11083	6K9194	ELBOW.............................	1
				UOC:V53	
47	XDFFF	11083	2V5702	TUBE ASSY.........................	1
				UOC:V53	
48	PAFZZ	11083	6M6853	TEE,TUBE TO BOSS..................	1
				UOC:V53	
49	XDFFF	11083	2V5703	TUBE ASSY.........................	1
				UOC:V53	
50	PAFZZ	11083	0S1590	BOLT,MACHINE......................	2
				UOC:V53	
51	XDFZZ	11083	7K4994	FLANGE............................	1
				UOC:V53	
52	PAFZZ	11083	9H6761	PACKING,PREFORMED.................	1
				UOC:V53	

(1) ITEM NO	(2) SMR CODE	(3) CAGEC	(4) PART NUMBER	(5) DESCRIPTION AND USABLE ON CODES(UOC)	(6) QTY
53	XDFZZ	11083	9J4653	VALVE................................. UOC:V53	1
54	PAFZZ	11083	8S9089	SCREW,CAP,HEXAGON H................... UOC:V53	3
55	XDFZZ	11083	2P8447	TEE,UNION,37 DEG FL................... UOC:V53	1
56	PBFZZ	11083	2M8340	CLEVIS,ROD END........................ UOC:V53	1
57	PAFZZ	11083	0S0175	PIN...................................	1
58	PBFZZ	11083	1M1341	END,ROD............................... UOC:V53	1

END OF FIGURE

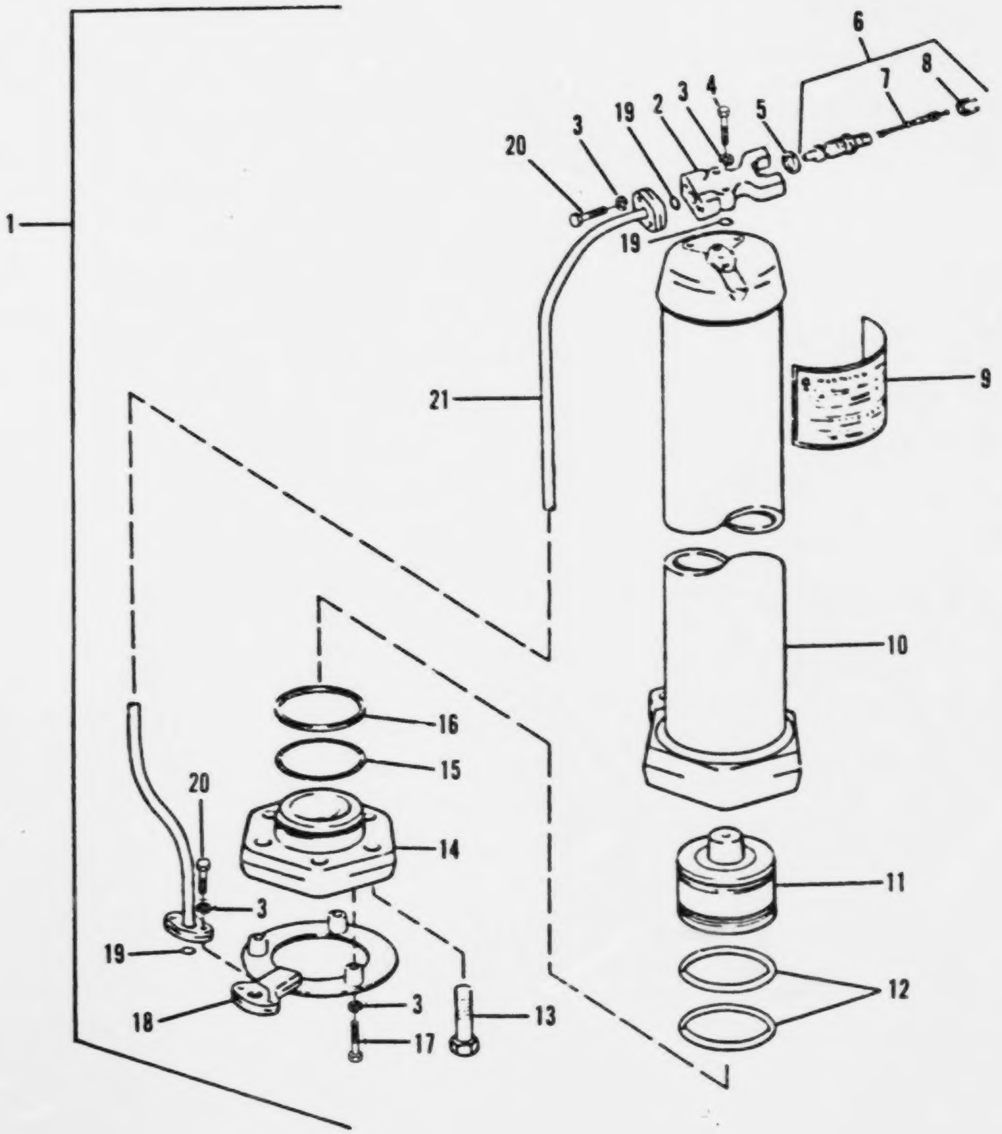

FIGURE 133. BRAKE ACCUMULATOR ASSEMBLY

(1) ITEM NO	(2) SMR CODE	(3) CAGEC	(4) PART NUMBER	(5) DESCRIPTION AND USABLE ON CODES(UOC)	(6) QTY
				GROUP 1204: HYDRAULIC BRAKE SYSTEM	
				FIG. 133 BRAKE ACCUMULATOR ASSEMBLY	
1	XDFFF	11083	9J8675	ACCUMULATOR GRP...................... UOC:V53	1
2	PBFZZ	11083	5J9443	.MANIFOLD............................ UOC:V53	1
3	PAFZZ	96906	MS35338-45	.WASHER,LOCK......................... UOC:V53	5
4	PAFZZ	11083	0S1590	.BOLT,MACHINE........................ UOC:V53	2
5	PAFZZ	11083	5M6708	.WASHER,SHOULDERED................... UOC:V53	1
6	PAFZZ	11083	6J366	.VALVE ASSEMBLY...................... UOC:V53	1
7	XAFZZ	53477	S-3268	..CORE............................... UOC:V53	1
8	XAFZZ	53744	5534	..CAP................................ UOC:V53	1
9	PAFZZ	11083	7J5311	.PLATE............................... UOC:V53	1
10	PBFZZ	11083	7J5352	.ACCUMULATOR ASSEMBL................. UOC:V53	1
11	XDFZZ	11083	9J9318	.PISTON.............................. UOC:V53	1
12	PAFZZ	11083	6J9354	.SEAL ASSEMBLY....................... UOC:V53	2
13	PAFZZ	11083	1D4627	.BOLT,MACHINE........................ UOC:V53	6
14	PAFZZ	11083	7J4704	.HEAD................................ UOC:V53	1
15	PAFZZ	11083	5F3144	.PACKING,PREFORMED................... UOC:V53	1
16	PAFZZ	11083	2K4096	.GASKET.............................. UOC:V53	1
17	PAFZZ	11083	0S1571	.BOLT................................ UOC:V53	3
18	PBFZZ	11083	7J4699	.COVER ASSEMBLY...................... UOC:V53	1
19	PAFZZ	11083	1P3700	.SEAL,PLAIN.......................... UOC:V53	3
20	PAFZZ	11083	0S1588	.BOLT................................ UOC:V53	2
21	XDFFF	11083	8J1543	.TUBE ASSY........................... UOC:V53	1

END OF FIGURE

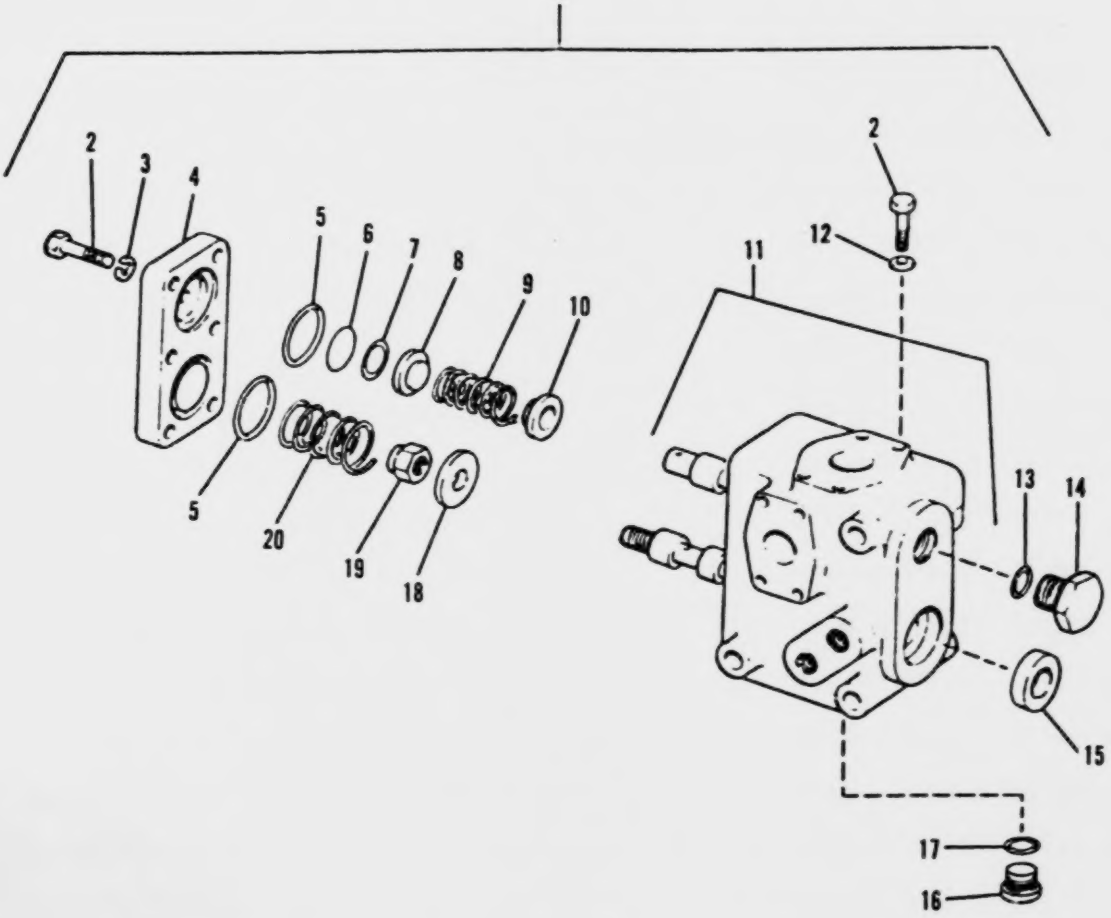

FIGURE 134. NEUTRALIZER VALVE ASSEMBLY

(1) ITEM NO	(2) SMR CODE	(3) CAGEC	(4) PART NUMBER	(5) DESCRIPTICN AND USABLE CN CODES(UOC)	(6) CTY
				GRCUP 12C4: HYDRAULIC BRAKE SYSTEM	
				FIG. 134 NEUTRALIZER VALVE ASSEMBLY	
1	PAFZZ	11C83	9J4695	VALVE HEAD,HYDRAULI.................. UCC:V53	1
2	PAFZZ	11C83	0S1588	.BCLT,MACHINE.......................... UCC:V53	12
3	PAFZZ	96906	MS35338-45	.WASHER,LOCK........................... UCC:V53	6
4	XDFZZ	11083	5J1191	.CCVER................................. UCC:V53	1
5	PAFZZ	11C83	3H1461	.PACKING,PREFORMED..................... UOC:V53	2
6	XDFZZ	11083	7M8538	.SPACER................................ UCC:V53	1
7	PAFZZ	11C83	5J9100	.SHIM.................................. UCC:V53	6
8	XCFZZ	11083	5J1188	.RETAINER.............................. UCC:V53	1
9	XDFZZ	11C83	4J8971	.SPRING................................ UCC:V53	1
10	XCFZZ	11C83	4J3297	.RETAINER.............................. UCC:V53	1
11	XDFFF	11083	9J4696	.VALVE GRP............................. UCC:V53	1
12	PFFZZ	11083	4B4278	.WASHER,FLAT........................... UCC:V53	8
13	PAFZZ	11C83	5F1678	.PACKING,PREFORMED..................... UOC:V53	1
14	PAFZZ	11083	1J9693	.PLLG.................................. UCC:V53	1
15	PAFZZ	73680	23546-4754	.SEAL,PLAIN ENCASED.................... UOC:V53	1
16	PAFZZ	11083	9S80C5	.PLLG,MACHINE THREAC................... UCC:V53	1
17	PAFZZ	81349	M832482908	PACKING, PREFORMED..................... UOC:V53	1
18	XCFZZ	11083	4J3953	.RETAINER.............................. UCC:V53	1
19	PAFZZ	11C83	2H3788	.NUT................................... UCC:V53	1
20	XDFZZ	11C83	4J3832	.SPRING................................ UCC:V53	1

END OF FIGURE

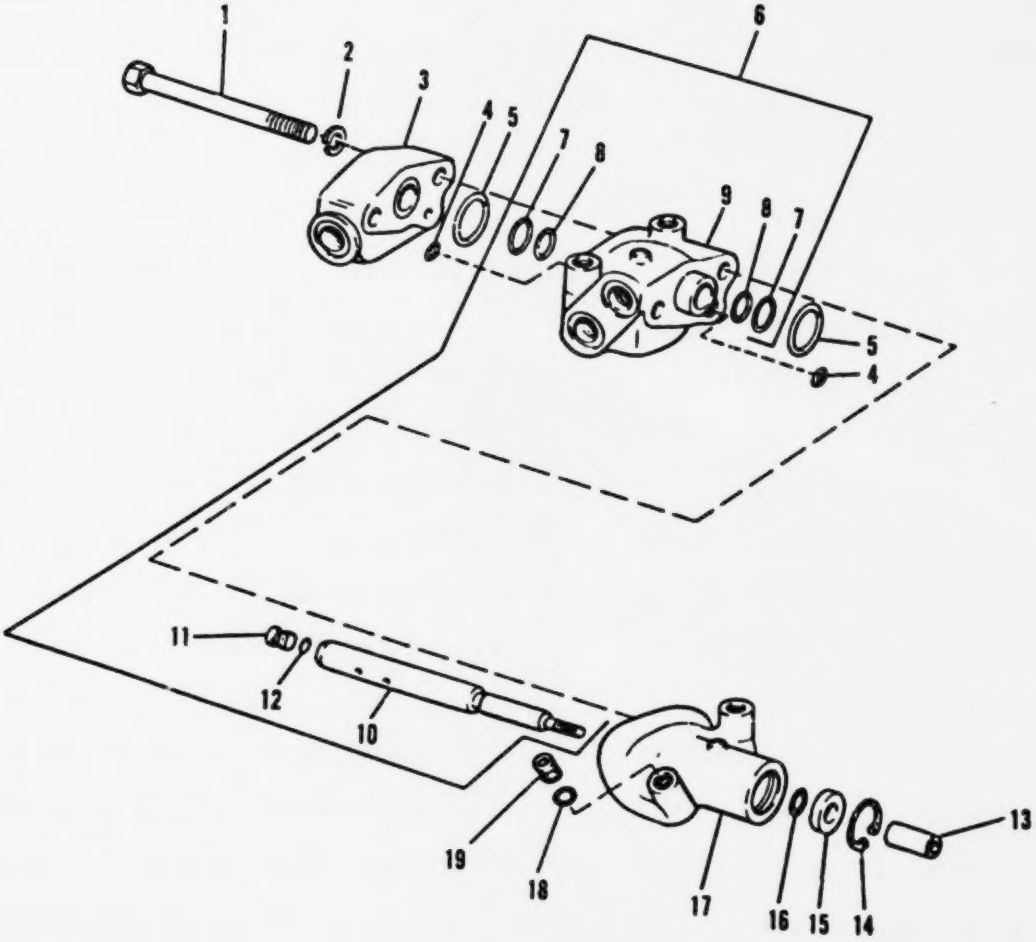

FIGURE 135. PARKING BRAKE VALVE ASSEMBLY

(1) ITEM NO	(2) SMR CODE	(3) CAGEC	(4) PART NUMBER	(5) DESCRIPTION AND USABLE ON CODES(UOC)	(6) QTY
				GROUP 1204: HYDRAULIC BRAKE SYSTEM	
				FIG. 135 PARKING BRAKE VALVE ASSEMBLY	
1	PAFZZ	11083	T65	BOLT,MACHINE........................ UOC:V53	2
2	PAFZZ	96906	MS35338-45	WASHER,LOCK......................... UOC:V53	2
3	XDFZZ	11083	3S7446	COVER,PRKG BK V..................... UOC:V53	1
4	PAFZZ	11083	4J2506	PACKING,PREFORMED................... UOC:V53	2
5	PAFZZ	11083	2K8199	PACKING,PREFORMED................... UOC:V53	2
6	XDFFF	11083	8J8327	VALVE GRP........................... UOC:V53	1
7	PAFZZ	11083	3S7450	.GASKET............................. UOC:V53	2
8	PAFZZ	11083	6F6672	.PACKING,PREFORMED.................. UOC:V53	2
9	XAFZZ	11083	3S7445	.BODY,PRKG BR V..................... UOC:V53	1
10	XAFZZ	11083	8J8328	.STEM,PRKG BR V..................... UOC:V53	1
11	PAFZZ	11083	4J7533	.PLUG,MACHINE THREAD................ UOC:V53	1
12	PAHZZ	59556	K-500-EN-0431	.SEAL............................... UOC:V53	1
13	XDFZZ	11083	3G0730	TUBE................................ UOC:V53	1
14	PAFZZ	96906	MS16625-1087	RING,RETAINING...................... UOC:V53	1
15	PAFZZ	11083	8S6959	SEAL,PLAIN ENCASED.................. UOC:V53	1
16	PAFZZ	11083	5H6005	PACKING,PREFORMED................... UOC:V53	1
17	XDFZZ	11083	7K6116	COVER,PRKG BK V..................... UOC:V53	1
18	PAFZZ	11083	3J7354	PACKING,PREFORMED................... UOC:V53	1
19	PAFZZ	30780	4HP5NS	PLUG,MACHINE THREAD................. UOC:V53	1

END OF FIGURE

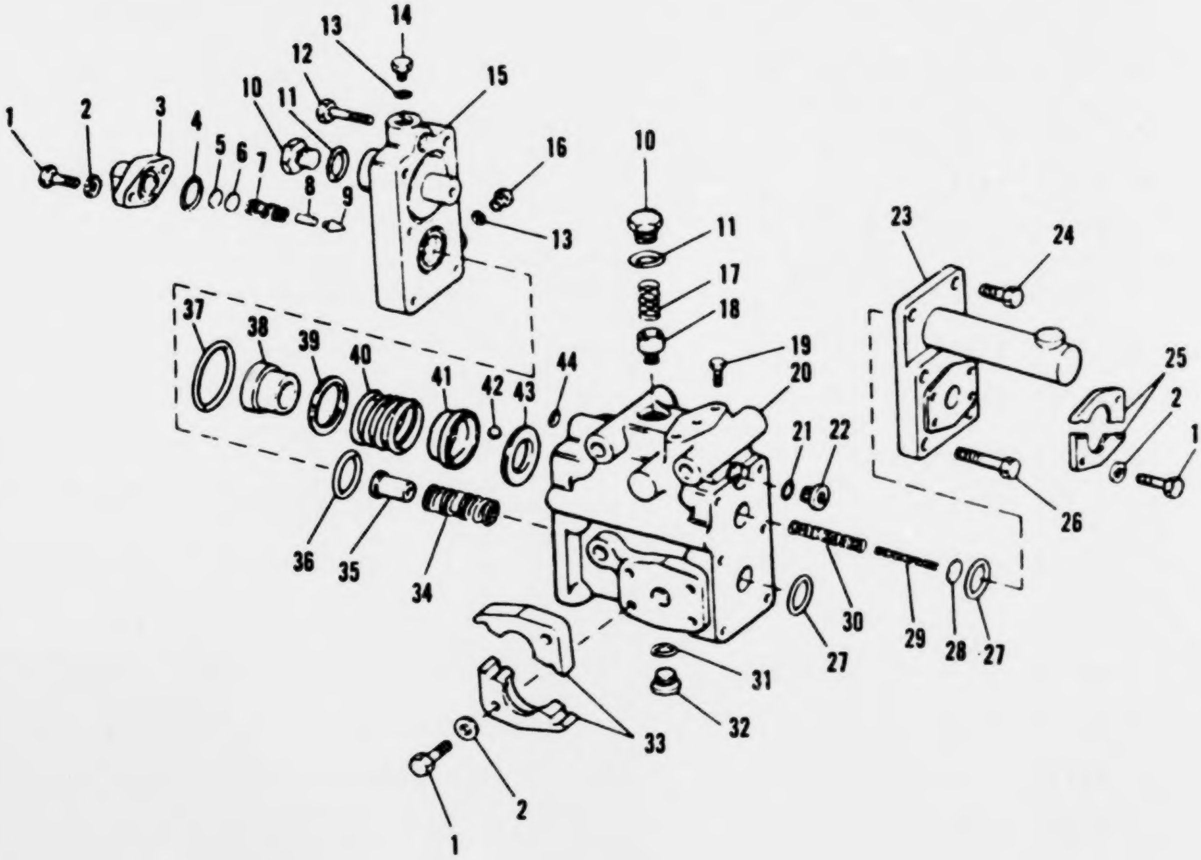

FIGURE 136. BRAKE ACCUMULATOR CHARGING VALVE ASSEMBLY

(1) ITEM NO	(2) SMR CODE	(3) CAGEC	(4) PART NUMBER	(5) DESCRIPTION AND USABLE CN CODES(UOC)	(6) QTY
				GROUP 1204: HYDRAULIC BRAKE SYSTEM	
				FIG. 136 BRAKE ACCUMULATOR CHARGING VALVE ASSEMBLY	
1	PAFZZ	11083	0S1588	BOLT,MACHINE........................ UOC:V53	10
2	PAFZZ	96906	MS35338-45	WASHER,LOCK........................ UOC:V53	10
3	XDFZZ	11083	5J9260	RETAINER,VALVE..................... UOC:V53	1
4	PAFZZ	11083	4J8996	SEAL............................... UOC:V53	1
5	PAFZZ	11083	3J7470	DISK,SOLID,PLAIN................... UOC:V53	1
6	PAFZZ	11083	3J7473	SHIM............................... UOC:V53	10
7	PAFZZ	11083	4F7115	SPRING,HELICAL,COMP................ UOC:V53	1
8	PAFZZ	11083	6J1311	PIN,STRAIGHT,HEADLE................ UOC:V53	1
9	PAFZZ	11083	1J8497	VALVE.............................. UOC:V53	1
10	PAFZZ	11083	9S4189	PLUG,MACHINE THREAD................ UOC:V53	2
11	PAFZZ	81349	M83248/2-910	PACKING,PREFORMED.................. UOC:V53	2
12	PAFZZ	96906	MS90728-64	SCREW,CAP,HEXAGON H................ UOC:V53	6
13	PAFZZ	11083	3J7354	PACKING,PREFORMED.................. UOC:V53	1
14	PAFZZ	11083	9S4182	PLUG,MACHINE THREAD................ UOC:V53	1
15	XDFFF	11083	6J7363	BODY GRP,PILOT..................... UOC:V53	1
16	PAFZZ	30780	4HP5NS	PLUG,MACHINE THREAD................ UOC:V53	1
17	PAFZZ	11083	9F6705	SPRING,HELICAL,COMP................ UOC:V53	1
18	PAFZZ	11083	1H0337	DISK,VALVE......................... UOC:V53	1
19	PAFZZ	96906	MS18154-58	SCREW,CAP,HEXAGON H................ UOC:V53	2
20	XDFFF	11083	9J4654	VALVE GRP.......................... UOC:V53	1
21	PAFZZ	25184	906-737-70	PACKING,PREFORMED.................. UOC:V53	1
22	PAFZZ	11083	9S8004	PLUG,MACHINE THREAD................ UOC:V53	1
23	XDFZZ	11083	4J6485	HOUSING,SPRING..................... UOC:V53	1
24	PAFZZ	11083	0S1594	BOLT,MACHINE.......................	2

(1) ITEM NO	(2) SMR CODE	(3) CAGEC	(4) PART NUMBER	(5) DESCRIPTION AND USABLE ON CODES(UOC)	(6) QTY
				UOC:V53	
25	PBFZZ	11083	1P4576	FLANGE,PIPE.......................... UOC:V53	2
26	PAFZZ	96906	MS90728-63	SCREW,CAP,HEXAGON H.................. UOC:V53	4
27	PAFZZ	81349	M83248/2-216	PACKING,PREFORMED.................... UOC:V53	2
28	PAFZZ	11083	4J6806	DISK,SOLID,PLAIN..................... UOC:V53	8
29	XDFZZ	11083	4J6809	SPRING............................... UOC:V53	1
30	XDFZZ	11083	4J6808	SPRING............................... UOC:V53	1
31	PAFZZ	81349	M83248-2-908	PACKING,PREFORMED.................... UOC:V53	1
32	PAFZZ	11083	9S8005	PLUG,MACHINE THREAD.................. UOC:V53	1
33	PBFZZ	11083	1P4577	FLANGE,PIPE.......................... UOC:V53	2
34	XDFZZ	11083	8J4508	SPRING............................... UOC:V53	1
35	XDFZZ	11083	4J6750	SPACER............................... UOC:V53	1
36	PAFZZ	11083	4J0519	PACKING,PREFORMED.................... UOC:V53	1
37	PAFZZ	11083	4J525	PACKING,PREFORMED.................... UOC:V53	1
38	XDFZZ	11083	4J6748	RETAINER............................. UOC:V53	1
39	PAFZZ	11083	5J0835	SPACER,RING.......................... UOC:V53	3
40	XDFZZ	11083	0S1850	SPRING............................... UOC:V53	1
41	XDFZZ	11083	6J9684	RETAINER............................. UOC:V53	1
42	PAFZZ	11083	7B6368	BALL,BEARING......................... UOC:V53	9
43	PAFZZ	11083	4J6583	WASHER,FLAT.......................... UOC:V53	1
44	PAFZZ	81349	M83248/2-110	PACKING,PREFORMED.................... UOC:V53	1

END OF FIGURE

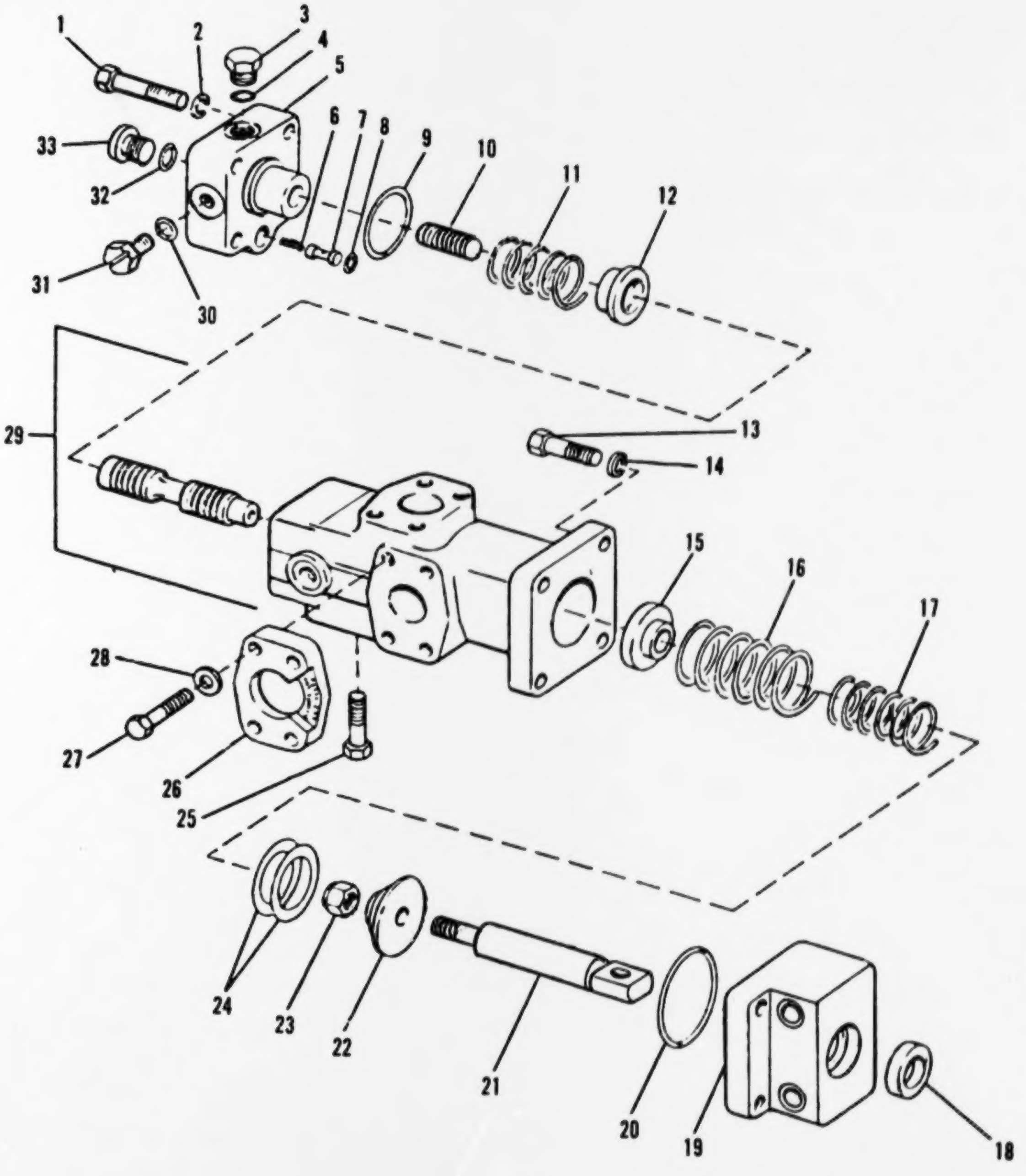

FIGURE 137. BRAKE VALVE ASSEMBLY

(1) ITEM NO	(2) SMR CODE	(3) CAGEC	(4) PART NUMBER	(5) DESCRIPTION AND USABLE ON CODES(UOC)	(6) QTY
				GROUP 1204: HYDRAULIC BRAKE SYSTEM	
				FIG. 137 BRAKE VALVE ASSEMBLY	
1	PAFZZ	11083	0S1571	SCREW,CAP,HEXAGON H.................. UOC:V53	4
2	PAFZZ	96906	MS35338-45	WASHER,LOCK.......................... UOC:V53	4
3	XDFZZ	11083	9S4686	PLUG,STR THD,SPL..................... UOC:V53	1
4	PAFZZ	25184	906-737-70	PACKING,PREFORMED.................... UOC:V53	1
5	XDFZZ	11083	9J4077	COVER................................ UOC:V53	1
6	XDFZZ	11083	3K2478	SPRING............................... UOC:V53	1
7	XDFZZ	11083	4J6803	ORIFICE,CHECK VALVE.................. UOC:V53	1
8	PAFZZ	11083	5H6005	PACKING,PREFORMED.................... UOC:V53	1
9	PAFZZ	11083	2J1826	PACKING,PREFORMED.................... UOC:V53	1
10	XDFZZ	11083	9J4076	PISTON............................... UOC:V53	1
11	XDFZZ	11083	4J6802	SPRING............................... UOC:V53	1
12	XDFZZ	11083	4J3295	RETAINER............................. UOC:V53	1
13	PAFZZ	11083	0S1588	BOLT,MACHINE......................... UOC:V53	4
14	PAFZZ	96906	MS35338-45	WASHER,LOCK.......................... UOC:V53	4
15	XDFZZ	11083	5J0570	RETAINER............................. UOC:V53	1
16	XDFZZ	11083	4J3303	SPRING............................... UOC:V53	1
17	XDFZZ	11083	4J3302	SPRING............................... UOC:V53	1
18	PAFZZ	11083	4K4114	SEAL,PLAIN ENCASED................... UOC:V53	1
19	XDFZZ	11083	9J4079	RETAINER............................. UOC:V53	1
20	PAFZZ	11083	8M4390	PACKING,PIPE MOUNTI.................. UOC:V53	1
21	XDFZZ	11083	9J4074	STEM................................. UOC:V53	1
22	XDFZZ	11083	9J4078	RETAINER............................. UOC:V53	1
23	PAFZZ	11083	2H3788	NUT.................................. UOC:V53	1
24	PAFZZ	11083	9J5624	SPACER,RING.......................... UOC:V53	2

(1) ITEM NO	(2) SMR CODE	(3) CAGEC	(4) PART NUMBER	(5) DESCRIPTION AND USABLE ON CODES(UOC)	(6) QTY
25	PAFZZ	96906	MS18154-58	SCREW,CAP,HEXAGON H................ UOC:V53	8
26	PBFZZ	11083	1P4577	FLANGE,PIPE........................ UOC:V53	1
27	PAFZZ	11083	1A2029	BOLT,MACHINE....................... UOC:V53	4
28	PFFZZ	11083	4B4278	WASHER,FLAT........................ UOC:V53	4
29	XDFFF	11083	9J4075	VALVE GRP.......................... UOC:V53	1
30	PAFZZ	11083	6F5559	PACKING,PREFORMED.................. UOC:V53	1
31	PBFZZ	11083	2J2864	PLUG,MACHINE THREAD................ UOC:V53	1
32	PAFZZ	81349	M83248-2-908	PACKING,PREFORMED.................. UOC:V53	1
33	PAFZZ	30780	8HP5N	PLUG,MACHINE THREAD................ UOC:V53	1

END OF FIGURE

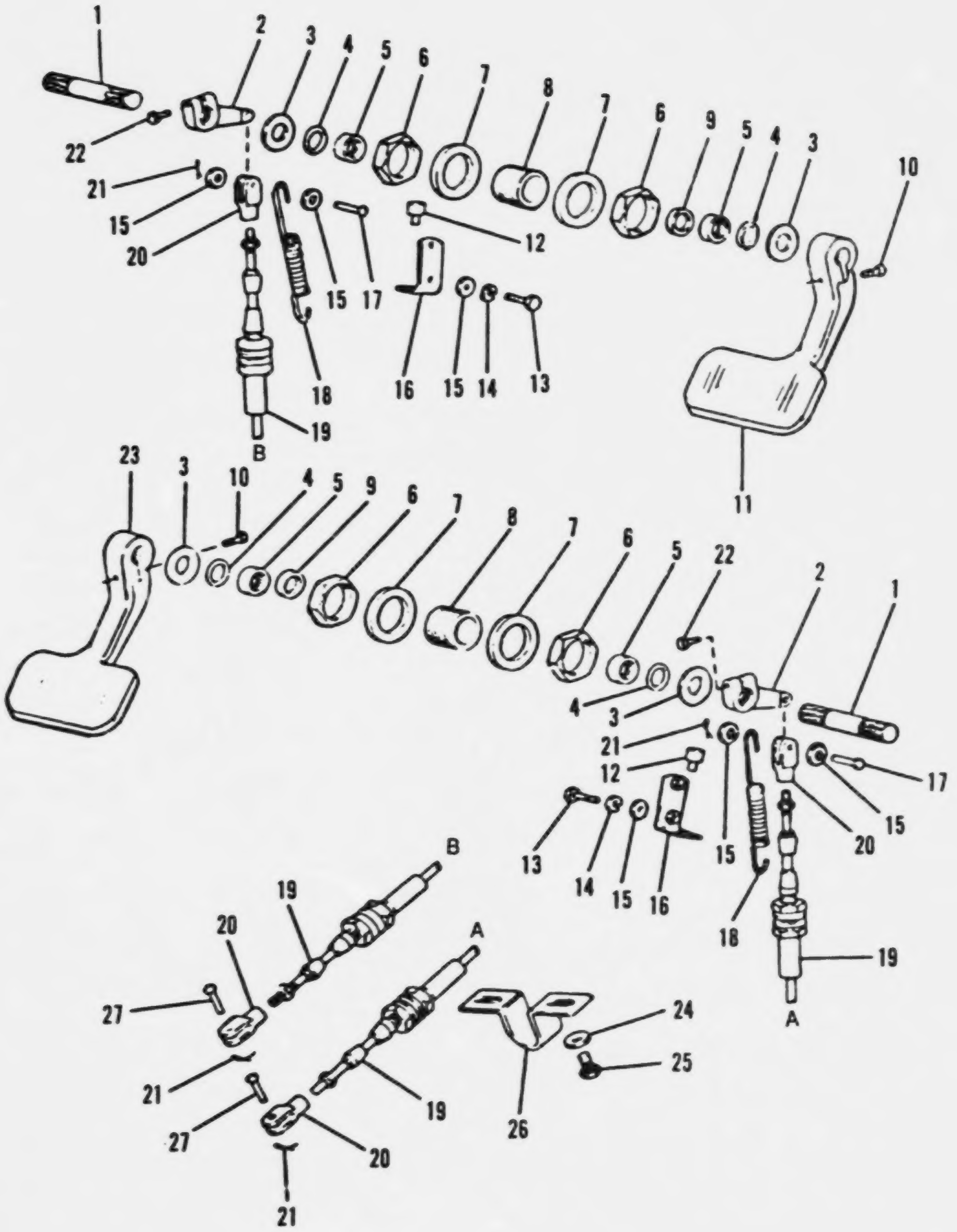

FIGURE 138. BRAKE PEDAL ASSEMBLY

(1) ITEM NO	(2) SMR CODE	(3) CAGEC	(4) PART NUMBER	(5) DESCRIPTION AND USABLE ON CODES(UOC)	(6) QTY
				GROUP 1206: MECHANICAL BRAKE SYSTEM	
				FIG. 138 BRAKE PEDAL ASSEMBLY	
1	XBFZZ	11083	1V9645	SHAFT................................ UOC:V53	2
2	XBFZZ	11083	9K4934	LEVER................................ UOC:V53	2
3	PAFZZ	11083	9S1328	WASHER,FLAT.......................... UOC:V53	4
4	PAFZZ	11083	8F5340	SEAL,PLAIN ENCASED................... UOC:V53	4
5	PAFZZ	60380	B168XPSCH	BEARING,ROLLER,NEED.................. UOC:V53	4
6	PAFZZ	11083	2V2043	NUT,PLAIN,HEXAGON.................... UOC:V53	4
7	PAFZZ	11083	5D2653	WASHER,FLAT.......................... UOC:V53	4
8	XBFZZ	11083	1V9813	RETAINER............................. UOC:V53	2
9	XBFZZ	11083	2V2044	SPACER............................... UOC:V53	2
10	PAFZZ	11083	1T720	BOLT,MACHINE......................... UOC:V53	2
11	XBFZZ	11083	2V6570	PEDAL................................ UOC:V53	1
12	XBFZZ	70485	P6C	BUMPER............................... UOC:V53	2
13	PAFZZ	11083	1A2029	BOLT,MACHINE......................... UOC:V53	4
14	PAFZZ	96906	MS35338-45	WASHER,LOCK.......................... UOC:V53	4
15	PFFZZ	11083	4B4278	WASHER,FLAT.......................... UOC:V53	4
16	XBFZZ	11083	9K4929	ANGLE ASSY........................... UOC:V53	2
17	XBFZZ	11083	4H1477	PIN,STR HD........................... UOC:V53	2
18	XBFZZ	11083	2V2046	SPRING............................... UOC:V53	2
19	PAFZZ	06970	774-M-TT-2-80	CONTROL ASSEMBLY,PU.................. UOC:V53	2
20	PBFZZ	11083	4J2701	ROD END,THREADED..................... UOC:V53	4
21	PBFZZ	11083	3B4615	PIN,COTTER........................... UOC:V53	4
22	PAFZZ	11083	S1587	BOLT,MACHINE......................... UOC:V53	2
23	XBFZZ	11083	9K3837	PEDAL................................ UOC:V53	1
24	PAFZZ	11083	9M6527	WASHER,FLAT.......................... UOC:V53	2

(1) ITEM NO	(2) SMR CODE	(3) CAGEC	(4) PART NUMBER	(5) DESCRIPTION AND USABLE ON CODES(UOC)	(6) QTY
25	PAFZZ	11C83	0S1554	BOLT,MACHINE........................ UOC:V53	2
26	XBFZZ	11083	4H7553	CLAMP................................ UOC:V53	1
27	PBFZZ	11C83	1J4384	PIN,STRAIGHT,HEADED.................. UOC:V53	2

END OF FIGURE

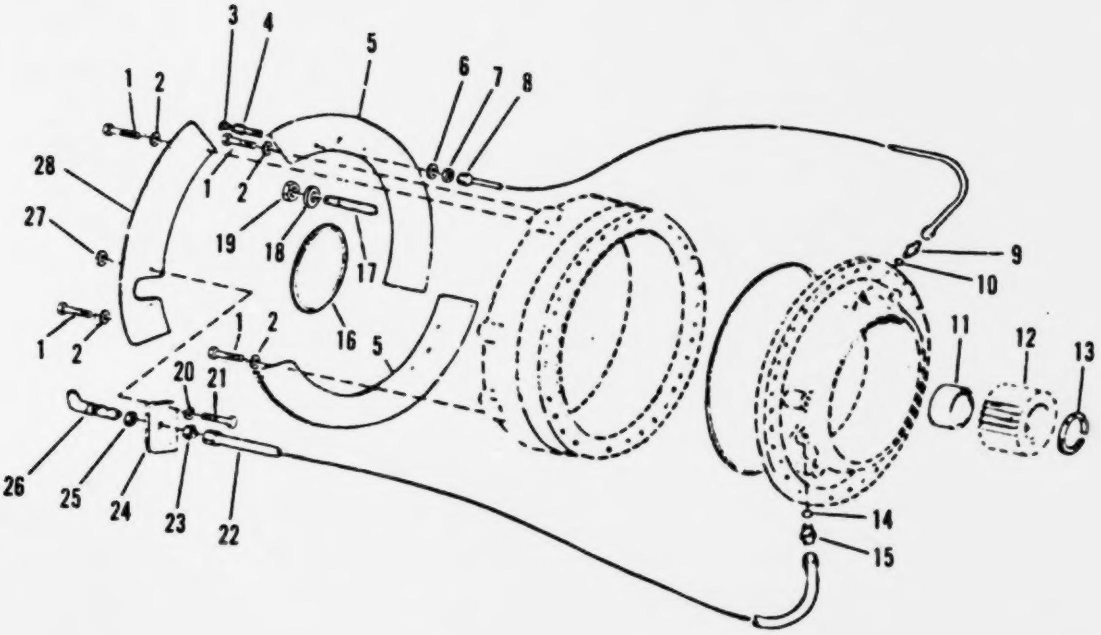

FIGURE 139. FINAL DRIVE AND BRAKE GROUP

(1) ITEM NO	(2) SMR CODE	(3) CAGEC	(4) PART NUMBER	(5) DESCRIPTION AND USABLE ON CODES(UOC)	(6) QTY
				GROUP 13: WHEELS AND TRACKS	
				GROUP 1311: WHEEL ASSEMBLY	
				FIG. 139 FINAL DRIVE AND BRAKE GROUP	
1	PAFZZ	11C83	0S1594	BOLT,MACHINE.......................... UOC:V53	9
2	PAFZZ	11C83	5P1075	WASHER,SQUARE CONE.................... UOC:V53	9
3	PAFZZ	11083	9F2167	VALVE,BLEEDER,HYDRA................... UOC:V53	1
4	XDFZZ	11083	1V7443	ADAPTER,BLDR SCR...................... UOC:V53	1
5	XDFZZ	11083	1V7444	PLATE,GUARD........................... UOC:V53	2
6	PAFZZ	88044	AN960C-716	WASHER,FLAT........................... UOC:V53	2
7	PAFZZ	96906	MS51968-11	NUT,PLAIN,HEXAGON..................... UOC:V53	1
8	PAFZZ	11083	1V7439	TUBE ASSEMBLY,METAL................... UOC:V53	1
9	PBFZZ	11083	3J7352	ADAPTER,STRAIGHT,TU................... UOC:V53	1
10	PAFZZ	11C83	3J7354	PACKING,PREFORMED..................... UOC:V53	1
11	XDFZZ	11C83	9K3186	SPACER................................ UOC:V53	1
12	XDFZZ	11C83	8K0099	GEAR,SUN.............................. UOC:V53	1
13	XDFZZ	61208	M2012130	RING,RTG,EXT.......................... UOC:V53	1
14	PAFZZ	81349	M83248-2-908	PACKING,PREFORMED..................... UOC:V53	1
15	PBFZZ	11C83	8M0505	ADAPTER,STRAIGHT,TU................... UOC:V53	1
16	PAFZZ	11083	1H8278	PACKING,PREFORMED..................... UOC:V53	1
17	XDFZZ	11083	7D4512	STUD,TPR,CONT THD..................... UOC:V53	22
18	PBFZZ	11083	3K5234	WASHER,FLAT........................... UOC:V53	22
19	PBFZZ	11C83	2J3507	NUT,PLAIN,HEXAGON..................... UOC:V53	22
20	PAFZZ	96906	MS35338-45	WASHER,LOCK........................... UOC:V53	2
21	PAFZZ	96906	MS90728-34	BOLT,MACHINE.......................... UOC:V53	2
22	XDFFF	11083	1V7440	TUBE ASSY............................. UOC:V53	1
23	PFFZZ	98441	8WLNS	NUT,PLAIN,HEXAGON..................... UOC:V53	1

(1) ITEM NO	(2) SMR CODE	(3) CAGEC	(4) PART NUMBER	(5) DESCRIPTION AND USABLE ON CODES(UOC)	(6) QTY
24	XDFZZ	11083	4V8886	PLATE ASSY.......................... UOC:V53	1
25	PAFZZ	11083	4H1394	WASHER,CROSS SHAFT................. UOC:V53	2
26	PFFZZ	11083	2P1325	ELBOW,TUBE.......................... UOC:V53	1
27	PAFZZ	11083	5D1753	WASHER,FLAT......................... UOC:V53	2
28	XDFZZ	11083	4V8884	PLATE,GUARD......................... UOC:V53	1

END OF FIGURE

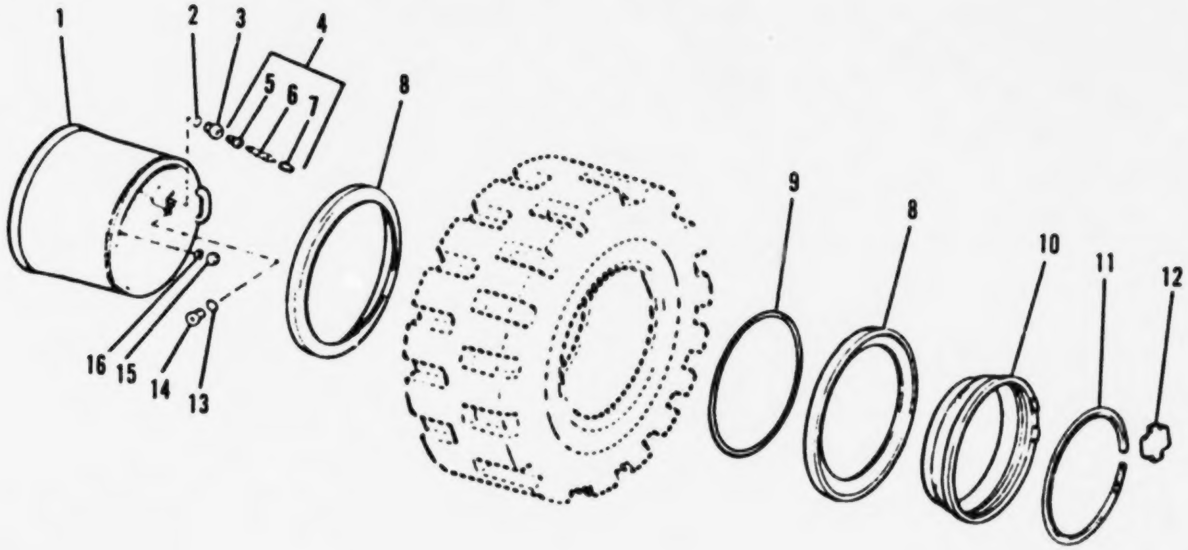

FIGURE 140. RIM ASSEMBLY

(1) ITEM NO	(2) SMR CODE	(3) CAGEC	(4) PART NUMBER	(5) DESCRIPTION AND USABLE ON CODES(UOC)	(6) QTY
				GROUP 1311: WHEEL ASSEMBLY	
				FIG. 140 RIM ASSEMBLY	
1	PAFZZ	11083	9V1292	WHEEL,SOLID RUBBER...................... UOC:V53	4
2	PAFZZ	99517	A180-119MILP2573 2	PACKING,PREFORMED...................... UOC:V53	1
3	PACZZ	11083	5V8927	VALVE,PNEUMATIC TIR................. UOC:V53	1
4	PAFZZ	27783	670A-198	VALVE,PNEUMATIC TIR................. UOC:V53	1
5	XDFZZ	79934	TRJ670-S	.VALVE.............................. UOC:V53	1
6	PAOZZ	27783	1449-T	.VALVE CORE......................... UOC:V53	1
7	PAFZZ	53477	4659	.CAP,PNEUMATIC VALVE................ UOC:V53	1
8	XDFZZ	08129	0S3533	FLANGE.............................. UOC:V53	2
9	PAFZZ	12195	071188CC	PACKING,PREFORMED................... UOC:V53	1
10	XDFZZ	08129	BB33HT31	BAND,BEAD SEAT...................... UOC:V53	1
11	XDFZZ	08129	523560950	RING,LOCK........................... UOC:V53	1
12	XDFZZ	08129	GY31C	DRIVER.............................. UOC:V53	1
13	PAFZZ	99517	A180-119MILP2573 2	PACKING,PREFORMED................... UOC:V53	1
14	XDFZZ	30780	12HP5N	PLUG,MACHINE THREAD................. UOC:V53	1
15	PAFZZ	11083	2J3506	NUT,PLAIN,HEXAGON................... UOC:V53	40
16	PAFZZ	11083	5P8248	WASHER,FLAT......................... UOC:V53	40

END OF FIGURE

FIGURE 141. TIRE

(1) ITEM NO	(2) SMR CODE	(3) CAGE	(4) PART NUMBER	(5) DESCRIPTION AND USABLE ON CODES (UOC)	(6) QTY
				GROUP 1313: TIRES, TUBES TIRE CHAINS	
				FIG. 141 TIRE	
1	PAFZZ	12195	35/65–R33XRDN–1A	TIRE,PNEUMATIC UOC: V53	4

END OF FIGURE

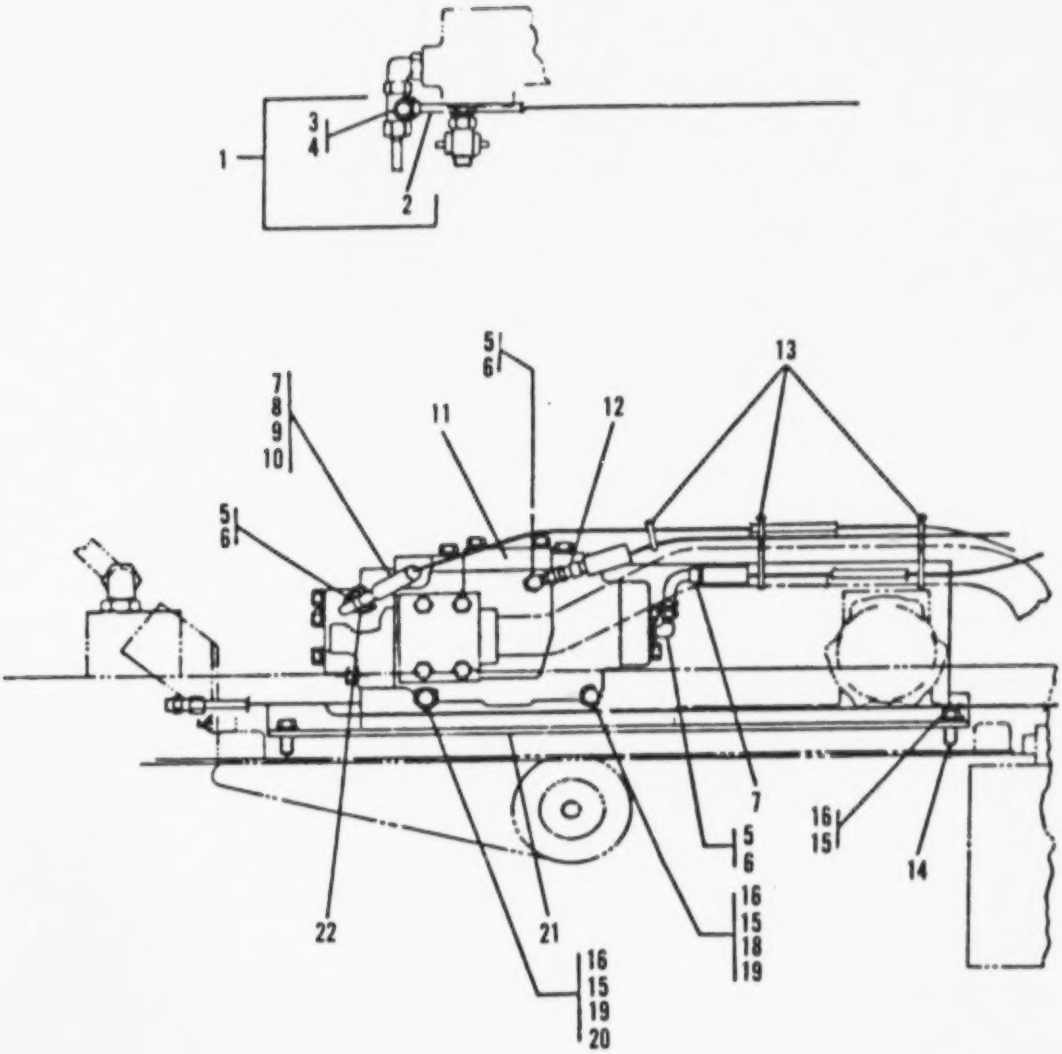

FIGURE 142. STEERING CONTROL SYSTEM (VALVE GROUP)

(1) ITEM NO	(2) SMR CODE	(3) CAGEC	(4) PART NUMBER	(5) DESCRIPTION AND USABLE ON CODES(UOC)	(6) QTY
				GROUP 14: STEERING	
				GROUP 14C1: MECHANICAL STEERING GEAR ASSEMBLY	
				FIG. 142 STEERING CONTROL SYSTEM (VALVE GROUP)	
	MFFZZ	11083	2V9302	HOSE ASSY........................... UOC:V53	1
1	XDFFF	11083	2V9346	TUBE ASSY........................... UOC:V53	1
2	XAFZZ	11083	5P0190	.TUBE............................... UOC:V53	1
3	PBFZZ	11083	3R4463	.SLEEVE,FLARED,TUBE................. UOC:V53	2
4	PAFZZ	10001	1226126-6	.NUT,TUBE COUPLING.................. UOC:V53	2
5	PBFZZ	96906	MS51527A6	ELBOW,TUBE TO BOSS.................. UOC:V53	4
6	PAFZZ	25184	906-737-70	PACKING,PREFORMED................... UOC:V53	13
7	MFFZZ	11083	2V9298	HOSE ASSY MAKE FROM HOSE P/N 5P178. UOC:V53	2
8	PFFZZ	11083	8S6393	.ELBOW,TUBE TO HOSE................. UOC:V53	1
9	PAFZZ	11083	4S5414	.SLEEVE,HOSE........................ UOC:V53	2
10	PAFZZ	11083	8S6417	.ADAPTER,STRAIGHT,TU................ UOC:V53	1
11	XDFHH	11083	8J2318	VALVE GRP,STEERING.................. UOC:V53	1
12	PAFZZ	11083	1V6275	TAG,MARKER.......................... UOC:V53	2
13	XDFZZ	11083	7D0874	STRAP, CABLE........................ UOC:V53	4
14	PAFZZ	11083	6H1717	BOLT,MACHINE........................ UOC:V53	4
15	PAFZZ	11083	4B4280	WASHER,FLAT......................... UOC:V53	7
16	PAFZZ	96906	MS35338-48	WASHER,LOCK......................... UOC:V53	7
17	PFFZZ	11083	1V6276	TAG,MARKER.......................... UOC:V53	4
18	PAFZZ	11083	2H6488	SCREW,CAP,HEXAGON H................. UOC:V53	2
19	PAFZZ	96906	MS51967-14	NUT,PLAIN,HEXAGON................... UOC:V53	3
20	PAFZZ	11083	8F8804	BOLT,MACHINE........................ UOC:V53	1
21	XDFZZ	11083	1V8976	BRACKET ASSY........................ UOC:V53	1

(1) ITEM NO	(2) SMR CODE	(3) CAGEC	(4) PART NUMBER	(5) DESCRIPTION AND USABLE ON CODES(UOC)	(6) QTY
22	PFFZZ	11083	1V6274	TAG,MARKER.......................... UOC:V53	4

END OF FIGURE

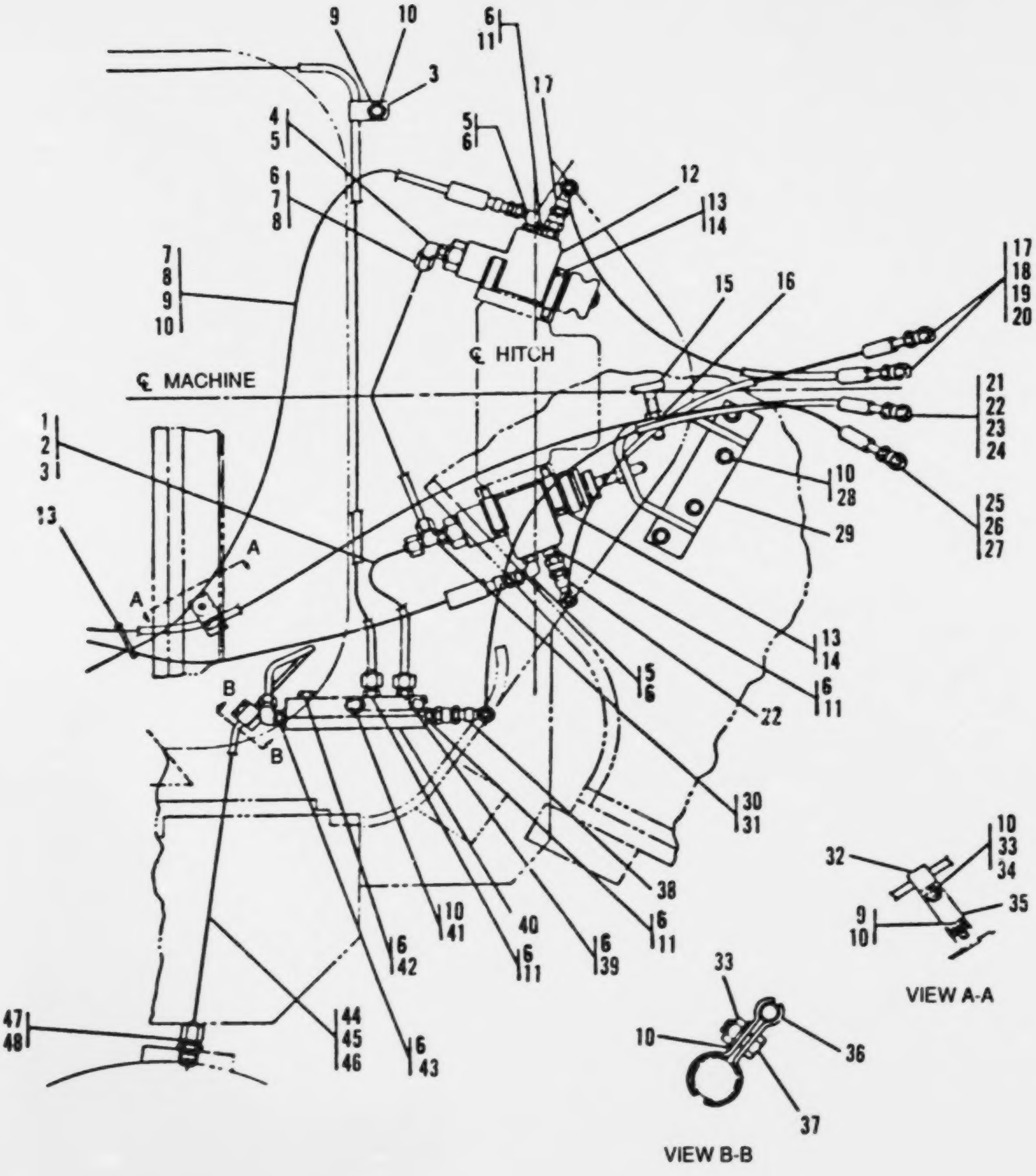

FIGURE 143. STEERING CONTROL SYSTEM (VALVE GROUP, NEUTRAL)

(1) ITEM NO	(2) SMR CODE	(3) CAGEC	(4) PART NUMBER	(5) DESCRIPTION AND USABLE ON CODES(UOC)	(6) QTY
				GROUP 1401: MECHANICAL STEERING GEAR ASSEMBLY	
				FIG. 143 STEERING CONTROL SYSTEM (VALVE GROUP, NEUTRAL)	
1	XDFFF	11083	2V9347	TUBE ASSY............................ UOC:V53	1
2	PBFZZ	11083	8707	.SLEEVE,FLARED,TUBE.................. UOC:V53	2
3	PBFZZ	11083	17014	.NUT,PLAIN,HEXAGON................... UOC:V53	2
4	PAFZZ	81349	M83248/2-905	PACKING,PREFORMED.................... UOC:V53	2
5	PFFZZ	79470	C5515X5	ELBOW,TUBE TO BOSS................... UOC:V53	1
6	XDFFF	11083	2V9348	TUBE ASSY............................ UOC:V53	1
7	PFFZZ	11083	8707	.SLEEVE,FLARED,TUBE.................. UOC:V53	2
8	PFFZZ	18876	8168376	.NUT,TUBE COUPLING................... UOC:V53	2
9	PAFZZ	11083	4F4879	BOLT,MACHINE......................... UOC:V53	3
10	PAFZZ	11083	5M2894	WASHER,FLAT.......................... UOC:V53	11
11	XDFZZ	11083	2R6806	ADAPTER,STRAIGHT,TU.................. UOC:V53	5
12	PAFHH	11083	8J1553	VALVE,NEUTRALIZER.................... UOC:V53	2
13	PAFZZ	14351	13XX3958	BOLT,MACHINE......................... UOC:V53	6
14	PAFZZ	96906	MS35338-45	WASHER,LOCK.......................... UOC:V53	6
15	XDFZZ	11083	9K8025	STUD ASSY............................ UOC:V53	2
16	PAFZZ	11083	1D5117	NUT,PLAIN,HEXAGON.................... UOC:V53	2
17	PFOZZ	11083	2V9301	HOSE ASSEMBLY,NONME.................. UOC:V53	2
18	PFFZZ	11083	8S6393	.ELBOW,TUBE TO HOSE.................. UOC:V53	2
19	PAFZZ	11083	8S6417	.ADAPTER,STRAIGHT,TU................. UOC:V53	2
20	PAFZZ	11083	4S5414	.SLEEVE,HOSE......................... UOC:V53	8
21	MFFZZ	11083	2V9302	HOSE ASSY............................	1
21	MFFZZ	11083	2V9302	HOSE ASSY MAKE FROM HOSE P/N 2V9302	1
22	PAFZZ	11083	8S6417	.ADAPTER,STRAIGHT,TU................. UOC:V53	1
23	PAFZZ	11083	4S5414	.SLEEVE,HOSE......................... UOC:V53	2

(1) ITEM NO	(2) SMR CODE	(3) CAGEC	(4) PART NUMBER	(5) DESCRIPTION AND USABLE ON CODES(UOC)	(6) QTY
24	PFFZZ	11083	8S6393	.ELBOW,TUBE TO HOSE.................. UOC:V53	1
25	PAFZZ	11083	8S6417	ADAPTER,STRAIGHT,TU.................. UOC:V53	1
26	PAFZZ	11083	8S6417	.ADAPTER,STRAIGHT,TU................. UOC:V53	2
27	PAFZZ	11083	4S5414	.SLEEVE,HOSE......................... UOC:V53	2
28	PAHZZ	96906	MMS90728-8	BOLT,MACHINE......................... UOC:V53	4
29	XDFZZ	11083	1V7944	PLATE ASSY........................... UOC:V53	1
30	PAFZZ	11083	3I6281	TEE,TUBE TO BOSS..................... UOC:V53	1
31	PFFZZ	11083	1S1015	CLAMP,LOOP........................... UOC:V53	1
32	PAFZZ	15564	1377A	NUT,PLAIN,HEXAGON.................... UOC:V53	2
33	PAFZZ	96906	MS18154-58	SCREW,CAP,HEXAGON H.................. UOC:V53	1
34	XDFZZ	11083	3V0778	BRACKET.............................. UOC:V53	1
35	XDFZZ	11083	5P5303	CLAMP................................ UOC:V53	2
36	PAFZZ	11083	0L1351	BOLT,MACHINE......................... UOC:V53	1
37	PFFZZ	11083	1V6277	TAG,MARKER........................... UOC:V53	1
38	PBFZZ	11083	5P419	REDUCER,TUBE......................... UOC:V53	1
39	XDFZZ	11083	2V7777	BLOCK,JUNCTION....................... UOC:V53	1
40	PAFZZ	11083	0S1590	BOLT,MACHINE......................... UOC:V53	2
41	PBFZZ	11083	9S4191	PLUG,MACHINE THREAD.................. UOC:V53	1
42	PBFZZ	11083	4K6297	ELBOW,TUBE TO BOSS................... UOC:V53	1
43	XDFFF	11083	2V9345	TUBE ASSY............................ UOC:V53	1
44	PFFZZ	30780	8BTXS	.NUT,TUBE COUPLING................... UOC:V53	2
45	PBFZZ	96906	MS5153388	.SLEEVE,FLARED,TUBE.................. UOC:V53	2
46	PFFZZ	96906	MS51525A8-10	ADAPTER,STRAIGHT,TU.................. UOC:V53	1
47	PAFZZ	81349	M83248/2-910	PACKING,PREFORMED.................... UOC:V53	1
48	PAFZZ	11083	9S1310	CLAMP,LOOP........................... UOC:V53	2

END OF FIGURE

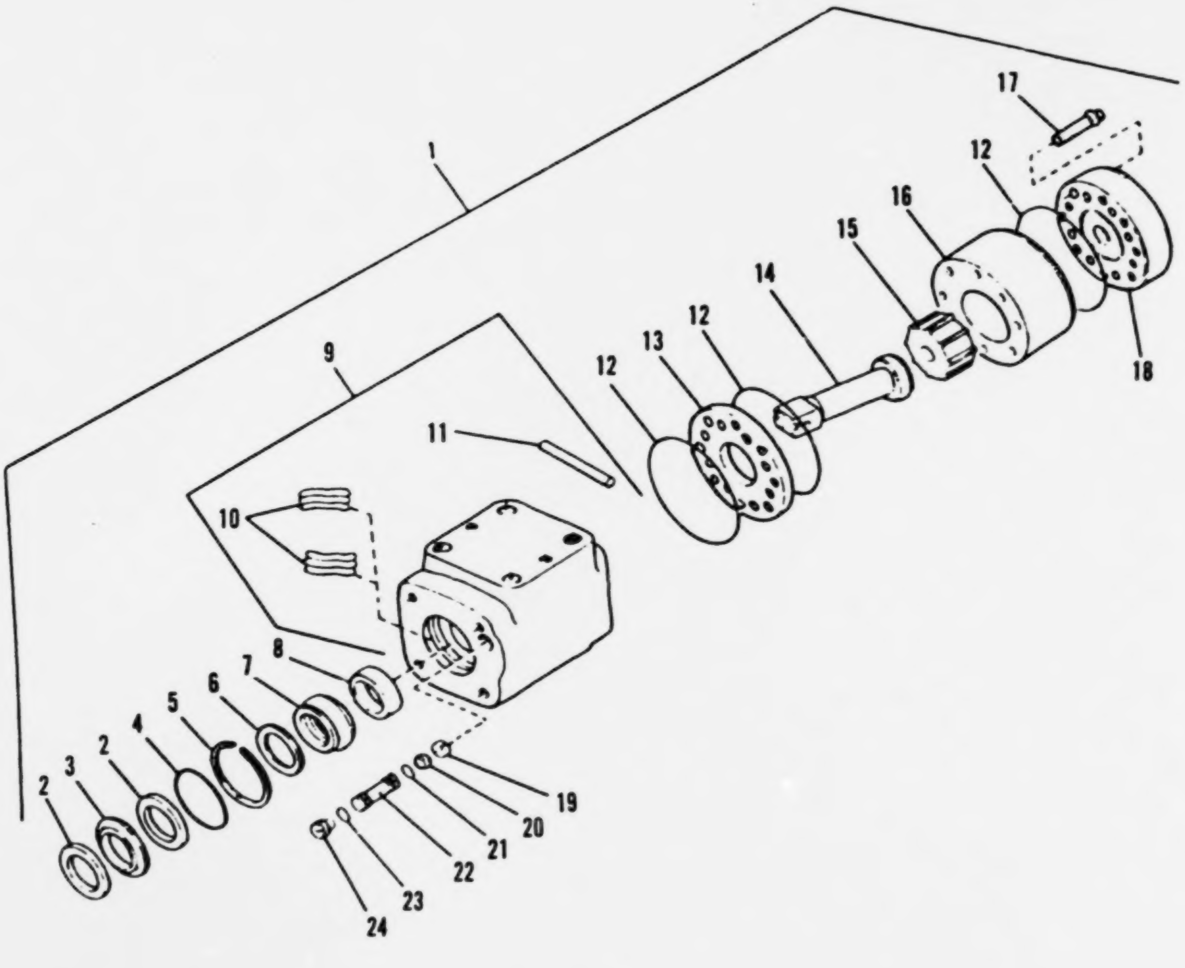

FIGURE 144. METERING PUMP ASSEMBLY

(1) ITEM NO	(2) SMR CODE	(3) CAGEC	(4) PART NUMBER	(5) DESCRIPTION AND USABLE ON CODES(UOC)	(6) QTY
				GROUP 1401: MECHANICAL STEERING GEAR ASSEMBLY	
				FIG. 144 METERING PUMP ASSEMBLY	
1	XDFHH	96151	212-1024-001	PUMP GRP,MTR........................ UOC:V53	1
2	PAHZZ	96151	8329	.BEARING,WASHER,THRU................ UOC:V53	2
3	PBHZZ	11083	5L11C0	.BEARING,ROLLER,NEED................ UOC:V53	1
4	PAHZZ	96906	MS9021-225	.PACKING,PREFORMED.................. UOC:V53	1
5	PAHZZ	11671	14317	.RING,RETAINING..................... UOC:V53	1
6	PAHZZ	96151	20599	.PACKING,PREFORMED.................. UOC:V53	1
7	PBHZZ	96151	7443	.BUSHING,SLEEVE..................... UOC:V53	1
8	PAHZZ	11083	8F5340	.SEAL,PLAIN ENCASED................. UOC:V53	1
9	XDHHH	96151	8344	.BODY ASSY.......................... UOC:V53	1
10	PBHZZ	96151	370	..SPRING CENTERING.................. UOC:V53	6
11	PAHZZ	96151	15	..PIN,CENTERING..................... UOC:V53	1
12	PAHZZ	11083	9J5686	.PACKING,PREFORMED.................. UOC:V53	3
13	PAHZZ	96151	7970	.RING ASSEMBLY,ELECT................ UOC:V53	1
14	PBHZZ	96151	5126	.GEARSHAFT,SPUR..................... UOC:V53	1
15	PAHZZ	96151	6901-3	.WASHER,KEY......................... UOC:V53	1
16	XDHZZ	96151	8436-4	.GEROTOR ASSY....................... UOC:V53	1
17	XDHHH	96151	5389-10	.BOLT,MACHINE....................... UOC:V53	7
18	PBHZZ	96151	8438	.PLATE,RETAINING,SHA................ UOC:V53	1
19	PAHZZ	17875	6862	.FASTENER,FLARE LOCK................ UOC:V53	1
20	PAHZZ	96151	18001	.BALL, BEARING...................... UOC:V53	1
21	PAHZZ	11083	5F9144	.PACKING,PREFORMED.................. UOC:V53	1
22	PBHZZ	96151	8318	.SEAT,VALVE......................... UOC:V53	1
23	PAHZZ	11083	1H1023	.PACKING,PREFORMED.................. UOC:V53	1
24	PAHZZ	96151	14380	.SETSCREW...........................	1

(1) ITEM NO	(2) SMR CODE	(3) CAGEC	(4) PART NUMBER	(5) DESCRIPTION AND USABLE ON CODES(UOC)	(6) QTY
				UOC:V53	

END OF FIGURE

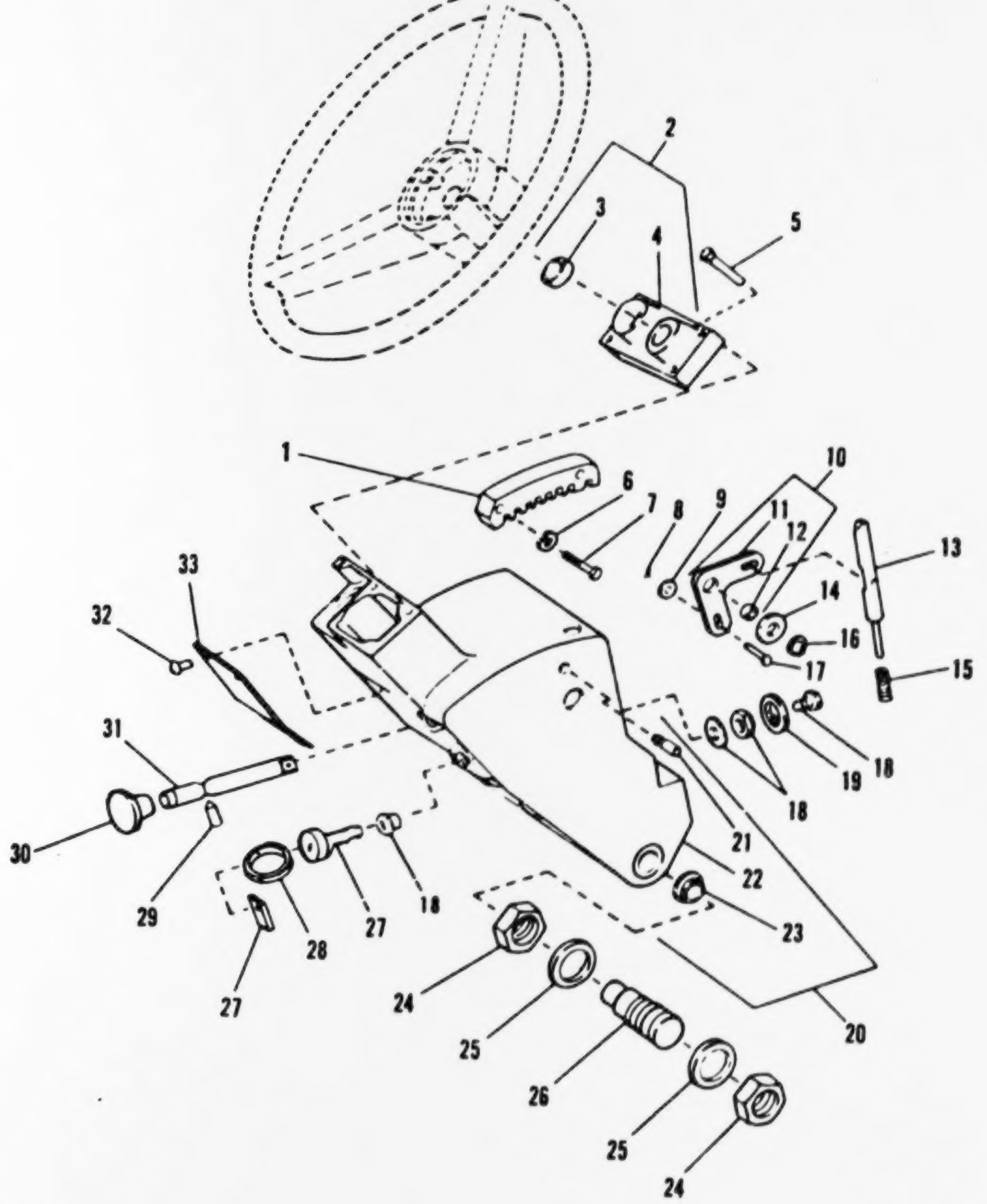

FIGURE 145. ADJUSTABLE STEERING COLUMN ASSEMBLY

(1) ITEM NO	(2) SMR CODE	(3) CAGEC	(4) PART NUMBER	(5) DESCRIPTION AND USABLE ON CODES(UOC)	(6) QTY
				GROUP 1401: MECHANICAL STEERING GEAR ASSEMBLY	
				FIG. 145 ADJUSTABLE STEERING COLUMN ASSEMBLY	
1	XDFZZ	11083	2V7849	BLOCK UOC:V53	1
2	XDFFF	11083	1V5775	CAP ASSY UOC:V53	1
3	PAFZZ	60380	JTT1211	.BEARING,ROLLER,NEED UOC:V53	1
4	XAFZZ	11083	8K7872	.CAP UOC:V53	1
5	PAFZZ	11083	5L4041	BOLT,MACHINE UOC:V53	4
6	PAFZZ	96906	MS35338-45	WASHER,LOCK UOC:V53	2
7	PAFZZ	11083	0S1591	SCREW UOC:V53	2
8	PAFZZ	96906	MS24665-134	PIN,COTTER UOC:V53	2
9	XDFZZ	11083	4B4274	WASHER,FLAT UOC:V53	2
10	XDFFF	11083	1V7323	BELLCRANK ASSY UOC:V53	1
11	XAFZZ	11083	1V4709	.BELLCRANK UOC:V53	1
12	XDFZZ	11083	3N2818	.BEARING UOC:V53	1
13	PAFZZ	11083	9K6768	PIN,SHOULDER,HEADLE UOC:V53	1
14	PAFZZ	11083	2V9166	WASHER,FLAT UOC:V53	2
15	PBFZZ	11083	4B4229	SPRING,HELICAL,COMP UOC:V53	1
16	PAFZZ	57931	5100-37	RING,RETAINING UOC:V53	2
17	PAFZZ	11083	1P3321	PIN,STRAIGHT,HEADED UOC:V53	2
18	XDFZZ	11083	9K6769	LOCK,STRG COL UOC:V53	1
19	XDFZZ	11083	1V5776	CAM UOC:V53	1
20	XDFFF	11083	1V5770	COLUMN ASSY UOC:V53	1
21	PAFZZ	11083	2V9167	.PIN,GROOVED,HEADLES UOC:V53	1
22	XAFZZ	11083	1V5655	.COLUMN UOC:V53	1
23	XDFZZ	60380	EA38688	.BEARING UOC:V53	2

(1) ITEM NO	(2) SMR CODE	(3) CAGEC	(4) PART NUMBER	(5) DESCRIPTION AND USABLE ON CODES(UOC)	(6) QTY
24	PAFZZ	11083	1D5121	NUT,SELF-LOCKING.................... UOC:V53	4
25	PAFZZ	11083	4B4284	WASHER.............................. UOC:V53	4
26	PAFZZ	11083	1V5772	PIN,SHOULDER,HEADLE................. UOC:V53	2
27	XBOZZ	11083	2V5503	KEY,LATCH........................... UOC:V53	1
28	XDFZZ	92250	KR8	RING,SPLIT.......................... UOC:V53	1
29	PAFZZ	11083	9K6762	PIN,STRAIGHT,HEADLE................. UOC:V53	1
30	PAOZZ	80813	250-C07	KNOB................................ UOC:V53	1
31	XDFZZ	11083	9K6666	ROD................................. UOC:V53	1
32	PAFZZ	11083	4S4465	SCREW,MACHINE....................... UOC:V53	4
33	XDFZZ	11083	2V7607	COVER............................... UOC:V53	1

END OF FIGURE

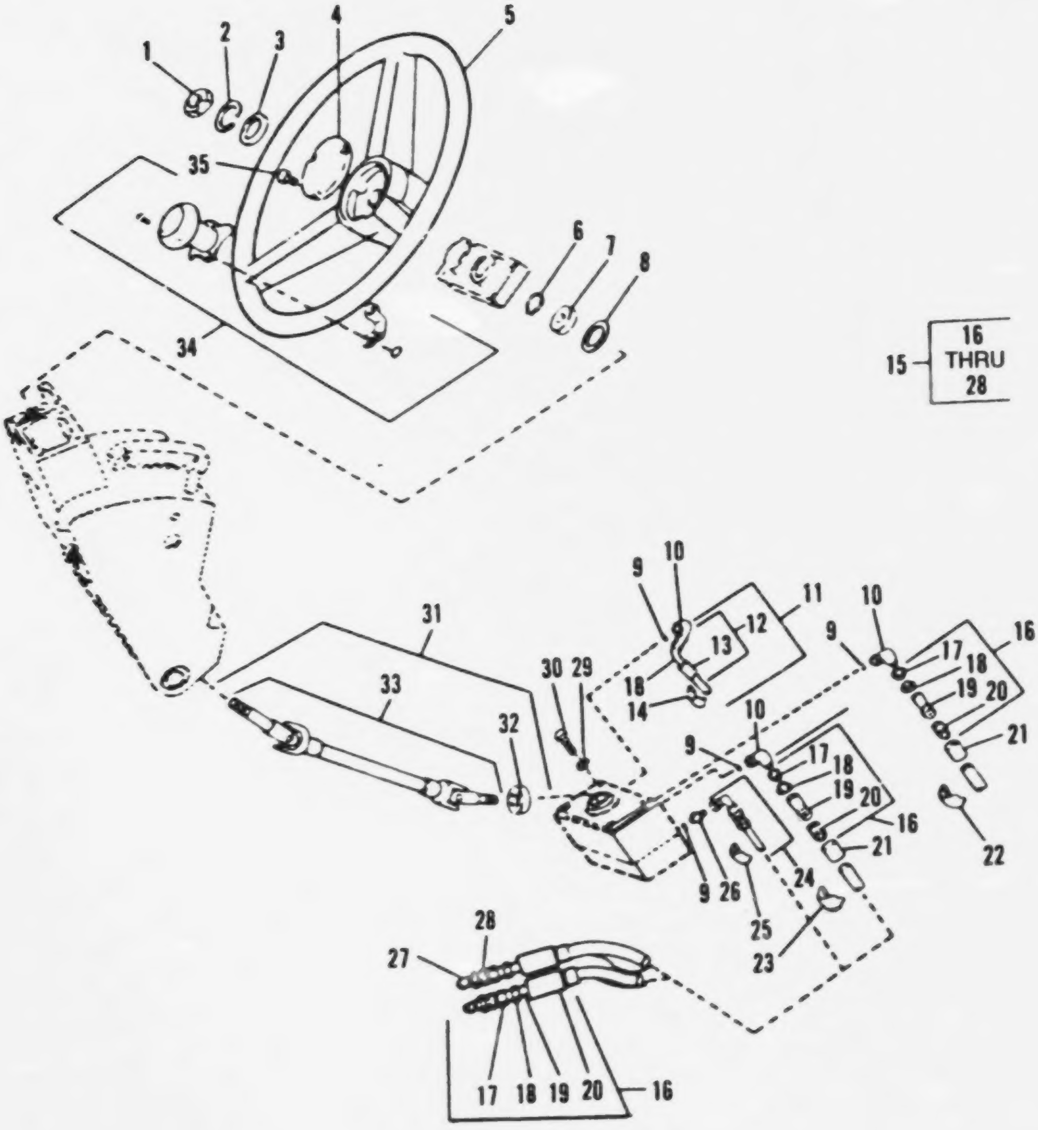

FIGURE 146. STEERING CONTROL ASSEMBLY

(1) ITEM NO	(2) SMR CODE	(3) CAGEC	(4) PART NUMBER	(5) DESCRIPTION AND USABLE ON CODES(UOC)	(6) QTY
				GROUP 1401: MECHANICAL STEERING GEAR ASSEMBLY	
				FIG. 146 STEERING CONTROL ASSEMBLY	
1	PAOZZ	24617	145036	NUT,SELF-LOCKING,HE.................. UOC:V53	1
2	PFOZZ	11083	6F0253	LOCKWASHER.......................... UOC:V53	1
3	PAOZZ	15434	S658	WASHER,FLAT......................... UOC:V53	1
4	XBOZZ	11083	1V9385	PLATE,IDENTIFICATIO................. UOC:V53	1
5	XBOZZ	79136	77-01	WHEEL,HAND STRG..................... UOC:V53	1
6	PAOZZ	79136	5102-100MD	RING,RETAINING...................... UOC:V53	1
7	PFOZZ	43334	93L05	BEARING,BALL,ANNULA................. UOC:V53	1
8	PAOZZ	80756	RRT-187	RING,RETAINING...................... UOC:V53	1
9	PAFZZ	25184	906-737-70	PACKING,PREFORMED................... UOC:V53	4
10	PBFZZ	96906	MS51527A6	ELBOW,TUBE TO BOSS.................. UOC:V53	3
11	XDFZZ	11083	2V3219	HOSE ASSY........................... UOC:V53	1
12	XDFFH	11083	4V6133	.HOSE ASSY.......................... UOC:V53	1
13	XAFZZ	11083	4S5413	..COLLET............................ UOC:V53	1
14	PFFZZ	11083	1V6277	BAND,MARKER......................... UOC:V53	2
15	XDFFF	11083	3V5648	HOSE ASSY........................... UOC:V53	2
16	PAFZZ	11083	8S6417	.ADAPTER,STRAIGHT,TU................ UOC:V53	2
17	XDFZZ	11083	8S3879	..NUT,HOSE CPLG..................... UOC:V53	1
18	PFFZZ	11083	1P9919	..ELBOW,TUBE TO HOSE................ UOC:V53	1
19	XAFZZ	11083	5P0035	..STEM.............................. UOC:V53	1
20	XDFZZ	11083	8S6721	..ADAPTER........................... UOC:V53	1
21	PAFZZ	11083	4S5414	.SLEEVE,HOSE........................ UOC:V53	4
22	PFFZZ	11083	1V6275	TAG,MARKER.......................... UOC:V53	2
23	PFFZZ	11083	1V6274	BAND MARKER......................... UOC:V53	2
24	PAFZZ	11083	8S6417	ADAPTER,STRAIGHT,TU.................	1

(1) ITEM NO	(2) SMR CODE	(3) CAGEC	(4) PART NUMBER	(5) DESCRIPTION AND USABLE ON CODES(UOC)	(6) QTY
				UOC:V53	
25	PFFZZ	11083	1V6276	BAND,MARKER	2
				UOC:V53	
26	PAFZZ	96906	MS51525A6	ADAPTER,STRAIGHT,TU	1
				UOC:V53	
27	PAFZZ	11083	1W3900	GASKET	4
				UOC:V53	
28	PFFZZ	11083	2P1278	ADAPTER,STRAIGHT,TU	4
				UOC:V53	
29	PAFZZ	96906	MS35338-45	WASHER,LOCK	4
				UOC:V53	
30	PAFZZ	11083	0S1588	BOLT,MACHINE	4
				UOC:V53	
31	XDFFH	11083	1V6349	SHAFT ASSY	1
				UOC:V53	
32	XDFZZ	11083	9K5636	.BEARING,BALL	1
				UOC:V53	
33	XAFZZ	11083	1V5606	.SHAFT ASSY	1
				UOC:V53	
34	XBOZZ	20568	WS-13	KNOB	1
				UOC:V53	
35	PAOZZ	96906	MS51861-39	SCREW,TAPPING,THREA	3
				UOC:V53	

END OF FIGURE

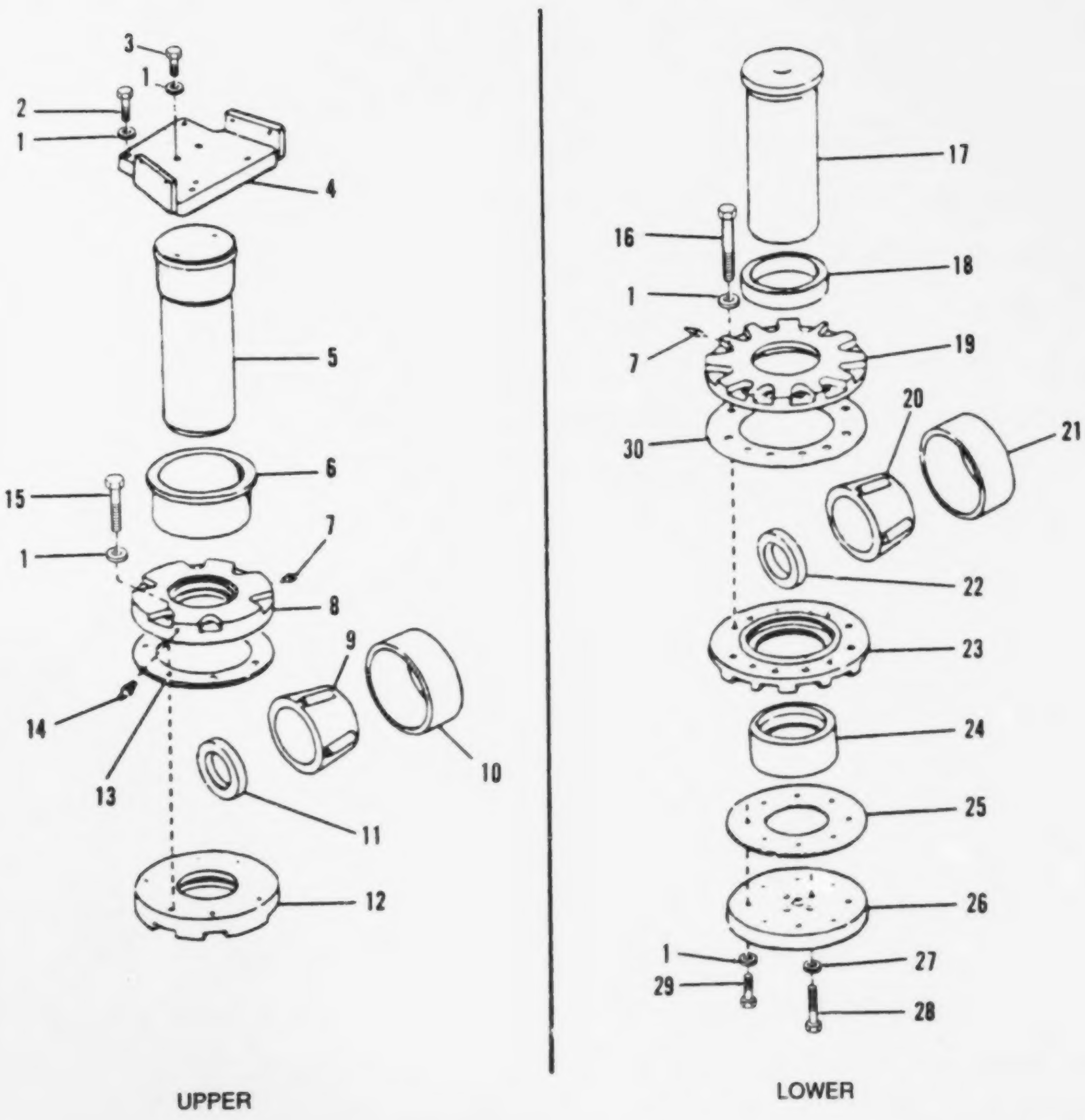

FIGURE 147. ARTICULATED HITCH

(1) ITEM NO	(2) SMR CODE	(3) CAGEC	(4) PART NUMBER	(5) DESCRIPTION AND USABLE ON CODES (UOC)	(6) QTY
				GROUP 1402: TRACTOR HITCH STEERING	
				FIG.147 ARTICULATED HITCH	
1	PAFZZ	11083	2M649	WASHER,FLAT.......................... UOC:V53	22
2	PAFZZ	11083	9S1366	BOLT,MACHINE.......................... UOC:V53	4
3	PAFZZ	11083	S1587	BOLT,MACHINE.......................... UOC:V53	2
4	XDFZZ	11083	2V6371	COVER ASSY.......................... UOC:V53	1
5	PAFZZ	11083	9K723	PIN,STRAIGHT,HEADED.................. UOC:V53	1
6	XDFZZ	11083	9K0724	COLLAR.......................... UOC:V53	1
7	PAFZZ	96906	MS15003-1	FITTING,LUBRICATION.................. UOC:V53	2
8	XDFZZ	11083	9K0726	CAP.......................... UOC:V53	1
9	XDFZZ	60038	HM218200-4-468	CONE,TPR RLR BRG.................. UOC:V53	2
10	PAFZZ	11083	6D7650	CUP,TAPERED ROLLER.................. UOC:V53	2
11	PAFZZ	11083	7K9212	SEAL,PLAIN ENCASED.................. UOC:V53	2
12	XDFZZ	11083	9K0725	CAP.......................... UOC:V53	1
13	PAFZZ	11083	9K721	SHIM.......................... UOC:V53	1
14	PAFZZ	57733	47200	VALVE,SAFETY RELIEF.................. UOC:V53	1
15	PAFZZ	11083	2H6488	SCREW,CAP,HEXAGON H.................. UOC:V53	6
16	XDFZZ	11083	1A7669	BOLT,MACHINE.......................... UOC:V53	12
17	PAFZZ	11083	9K804	PIN,STRAIGHT,HEADED.................. UOC:V53	1
18	XDFZZ	11083	9K0803	SPACER.......................... UOC:V53	1
19	XDFZZ	11083	9K0805	CAP.......................... UOC:V53	1
20	XDFZZ	11083	5P9769	CONE,TPR RLR BRG.................. UOC:V53	2
21	XDFZZ	11083	5P2525	CUP,TPR RLR BRG.................. UOC:V53	2
22	PAFZZ	11083	3K6455	SEAL,PLAIN ENCASED.................. UOC:V53	2
23	XDFZZ	11083	9K0806	CAP.......................... UOC:V53	1
24	XDFZZ	11083	9K0802	SPACER.......................... UOC:V53	1

(1) ITEM NO	(2) SMR CODE	(3) CAGEC	(4) PART NUMBER	(5) DESCRIPTION AND USABLE ON CODES(UOC)	(6) QTY
25	PAFZZ	11083	3K6412	SHIM.............................. UOC:V53	1
26	XDFZZ	11083	4V4483	PLATE,LOCK........................ UOC:V53	1
27	PAFZZ	11083	2S0115	WASHER,FLAT....................... UOC:V53	4
28	PAFZZ	11083	0L1178	BOLT,MACHINE...................... UOC:V53	4
29	PAFZZ	11083	1A1460	BOLT,MACHINE...................... UOC:V53	8
30	PAFZZ	11083	3K6401	SHIM.............................. UOC:V53	1

END OF FIGURE

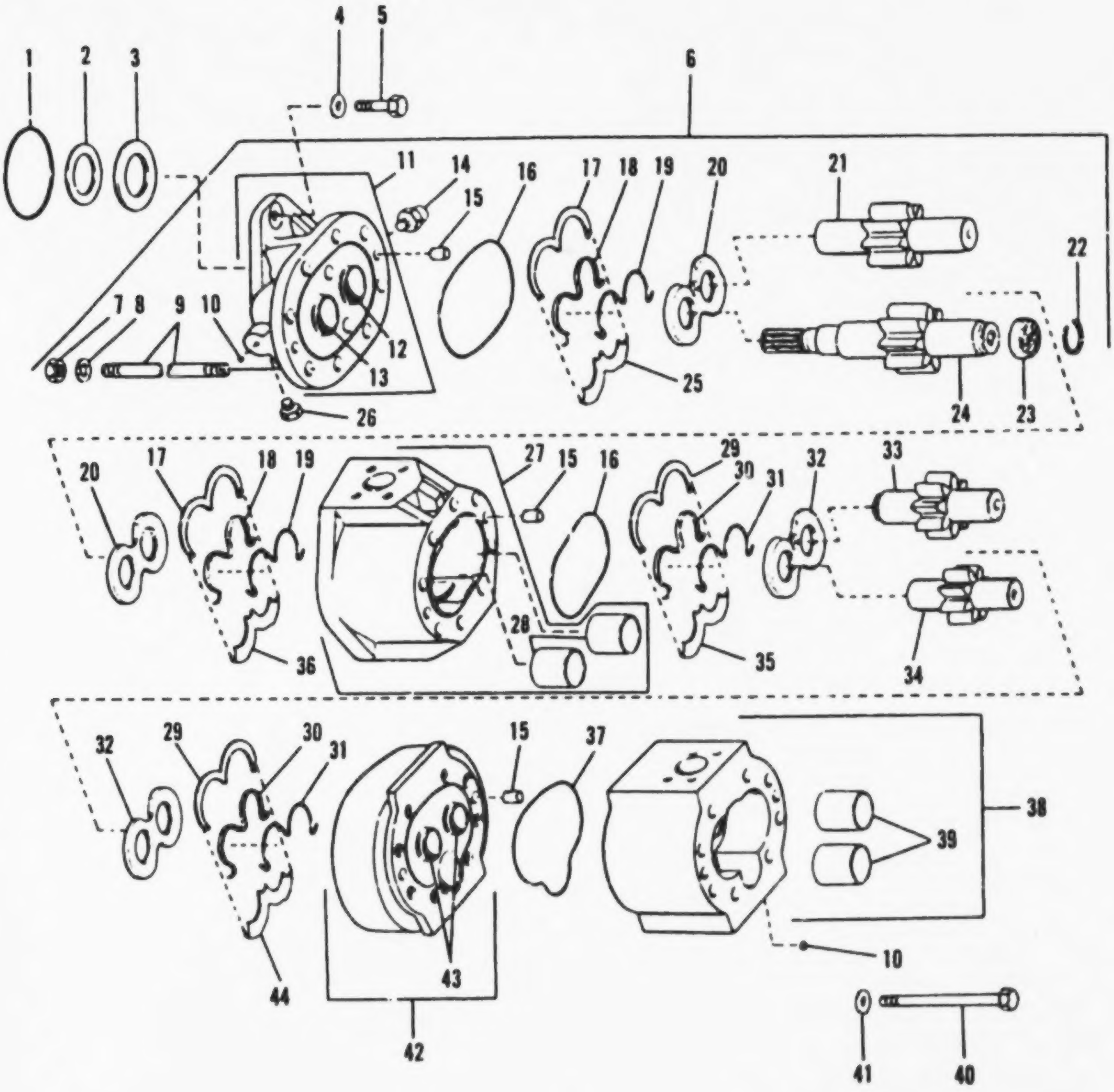

FIGURE 148. STEERING AND BRAKE PUMP ASSEMBLY

(1) ITEM NO	(2) SMR CODE	(3) CAGEC	(4) PART NUMBER	(5) DESCRIPTION AND USABLE ON CODES(UOC)	(6) QTY
				GROUP 1410: HYDRAULIC PUMP OR FLUID MOTOR ASSEMBLY	
				FIG. 148 STEERING AND BRAKE PUMP ASSEMBLY	
1	PAFZZ	11083	5F3106	PACKING,PREFORMED.................... UOC:V53	1
2	KFHZZ	11671	14145	SEAL PART OF KIT P/N 13887........... UOC:V53	2
3	KFHZZ	11671	11085	RING,SPACER PART OF KIT P/N 25658 PART OF KIT P/N 13887................ UOC:V53	1
4	PAFZZ	11083	4D3704	WASHER,FLAT.......................... UOC:V53	2
5	PAFZZ	96906	MS90728-163	SCREW,CAP,HEXAGON H.................. UOC:V53	2
6	XDFHH	11671	48150	PUMP ASSY............................ UOC:V53	1
7	PAHZZ	92595	HR10	.NUT,PLAIN,HEXAGON................... UOC:V53	8
8	PAHZZ	11671	11147	.WASHER,FLAT......................... UOC:V53	8
9	PFHZZ	11671	11688-4	.STUD,PLAIN.......................... UOC:V53	8
10	KFHZZ	29337	74-250	.BALL PART OF KIT P/N 25658.......... UOC:V53	2
11	KFHZZ	11671	47642	.FLANGE PART OF KIT P/N 25658....... UOC:V53	1
12	XDHZZ	11671	12717	..BUSHING............................ UOC:V53	1
13	XDHZZ	11671	11650	..BUSHING............................ UOC:V53	1
14	KFHZZ	11671	15587	.VALVE,SAFETY RELIEF PART OF KIT P/N 25658............................... UOC:V53	1
15	KFHZZ	11671	20-16KH3390	.PIN,STR,HDLS PART OF KIT P/N 25658 PART OF KIT P/N 26058-C............. UOC:V53	6
16	KFHZZ	86579	55-157-19009	.PACKING,PREFMD PART OF KIT P/N 25658 PART OF KIT P/N 13887......... UOC:V53	2
17	KFHZZ	11671	21534	.RING,RETAINING PART OF KIT P/N 25658 PART OF KIT P/N 13887......... UOC:V53	2
18	KFHZZ	11671	25768	.RING,BACK UP PART OF KIT P/N 25658. UOC:V53	2
19	KFHZZ	11671	22578	.PACKING,PREFMD PART OF KIT P/N 25658 PART OF KIT P/N 13887......... UOC:V53	2
20	KFHZZ	11671	25873	.PLATE,PRESSURE PART OF KIT P/N 25658................................	2

(1) ITEM NO	(2) SMR CODE	(3) CAGEC	(4) PART NUMBER	(5) DESCRIPTION AND USABLE ON CODES(UOC)	(6) QTY
				UOC:V53	
21	KFHZZ	11671	25082	GEAR, IDLER, PART OF KIT P/N 25658.. UOC:V53	1
22	KFHZZ	79136	58-A50CC-112	.RING,RETAINING PART OF KIT P/N 25658.............................. UOC:V53	1
23	KFHZZ	11671	23324	.COUPLING,SPLINE PART OF KIT P/N 25658 PART OF KIT P/N 26058-C....... UOC:V53	1
24	KFHZZ	11671	25335	.GEAR,DRIVE,FRONT PART OF KIT,P/N 25658 PART OF KIT P/N 25658.......... UOC:V53	1
25	KFHZZ	11671	21677	.PLATE,ISOLATION,TOP PART OF KIT P/N 25658.......................... UOC:V53	1
26	KFHZZ	11671	13048	PLUG PART OF KIT P/N 25658.......... UOC:V53	1
27	KFHZZ	11671	47476	.BODY PART OF KIT P/N 25658.......... UOC:V53	1
28	XDHZZ	11671	12717	..BUSHING........................... UOC:V53	2
29	KFHZZ	11671	22449	.RING,RETAINING PART OF KIT P/N 26058-C PART OF KIT P/N 13887....... UOC:V53	2
30	KFHZZ	11671	25777	.RING,BACK UP PART OF KIT P/N 26058-C.................................. UOC:V53	2
31	KFHZZ	11671	22693	.PACKING,PREFMD PART OF KIT P/N 13887.............................. UOC:V53	2
32	KFHZZ	11671	25862	.PLATE,PRESSURE PART OF KIT P/N 26058-C............................ UOC:V53	2
33	KFHZZ	11671	25082	.GEAR,IDLER,FRONT PART OF KIT P/N 25658.............................. UOC:V53	1
34	PAHZZ	11671	24066	.GEAR,SPUR PART OF KIT P/N 26058-C.. UOC:V53	1
35	PAHZZ	11671	22527	.PLATE,ISOLATION,TOP PART OF KIT P/N 26058-C UOC:V53	1
36	KFHZZ	11671	21678	.PLATE,ISOLATION,BOT PART OF KIT P/N 25658.......................... UOC:V53	1
37	KFHZZ	86579	55-252-17007	.PACKING,PREFMD PART OF KIT P/N 25658 PART OF KIT P/N 13887.......... UOC:V53	1
38	KFHHH	11671	44916	.BODY PART OF KIT P/N 26058-C....... UOC:V53	1
39	PAHZZ	11671	11669	..BEARING,SLEEVE.................... UOC:V53	2
40	XDHZZ	11671	62D-6-5CHG8	.SCREW,CAP,HEX HD PART OF KIT P/N	8

(1) ITEM NO	(2) SMR CODE	(3) CAGEC	(4) PART NUMBER	(5) DESCRIPTION AND USABLE ON CODES(UOC)	(6) QTY
				26C58-C................................ UOC:V53	
41	PAHZZ	11671	11146	.WASHER,FLAT PART OF KIT P/N 26058-C UOC:V53	8
42	KFHZZ	11671	46031	.PLATE,BEARING PART OF KIT P/N 26058 -C................................... UOC:V53	1
43	PAHZZ	11671	11665	..BEARING,SLEEVE...................... UOC:V53	2
44	PAHZZ	11671	22528	.PLATE,ISOLATION,BOT PART OF KIT P/N 26C58-C............................. UOC:V53	1

END OF FIGURE

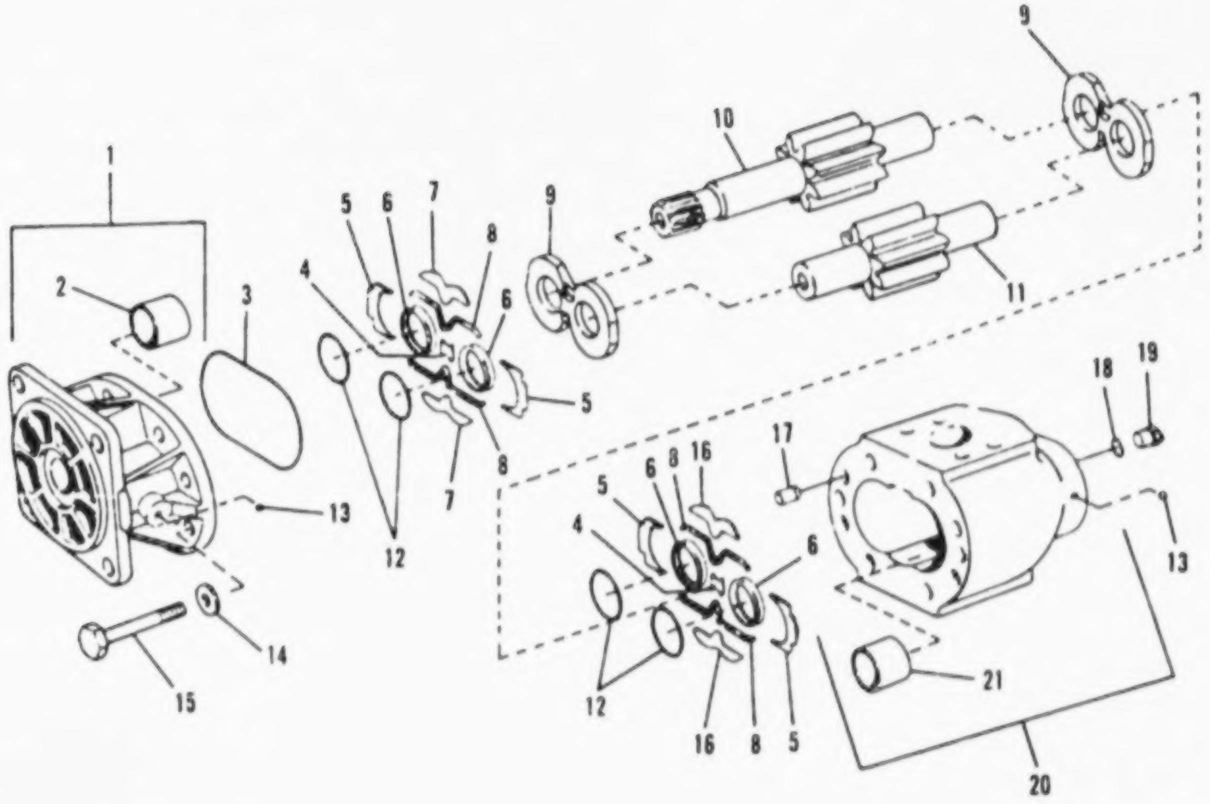

FIGURE 149. SUPPLEMENTAL STEERING PUMP

(1) ITEM NO	(2) SMR CODE	(3) CAGEC	(4) PART NUMBER	(5) DESCRIPTION AND USABLE ON CODES(UOC)	(6) QTY
				GROUP 1410: HYDRAULIC PUMP OR FLUID MOTOR ASSEMBLY	
				FIG. 149 SUPPLEMENTAL STEERING PUMP	
1	XDHZZ	11671	47445	FLANGE.............................. UOC:V53	1
2	XDHZZ	11671	13415	BUSHING............................. UOC:V53	2
3	KFHZZ	86579	55-156-19009	PACKING,PREFMD PART OF KIT P/N 14663 -1.................................. UOC:V53	1
4	KFHZZ	11671	14021	SEPARATOR,CENTER PART OF KIT P/N 14663-1............................ UOC:V53	2
5	KFHZZ	11671	14023	SEPARATOR,END PART OF KIT P/N 14663-1.................................. UOC:V53	4
6	KFHZZ	11671	14022	RING,BACKUP PART OF KIT P/N 14663-1. UOC:V53	4
7	PFHZZ	11671	22091	ESCUTCHEON PLATE.................... UOC:V53	2
8	KFHZZ	11671	22088	STRIP,SEALING PART OF KIT P/N 14663-1.................................. UOC:V53	4
9	PFHZZ	11671	22792	PLATE,PRESSURE...................... UOC:V53	2
10	XDHZZ	11671	25023	GEAR,DRIVE.......................... UOC:V53	1
11	XDHZZ	11671	24978	GEAR,IDLER.......................... UOC:V53	1
12	KFHZZ	86579	55-028-19009	PACKING,PREFMD PART OF KIT P/N 14663 -1.................................. UOC:V53	4
13	XDHZZ	29337	74-500	BALL................................ UOC:V53	2
14	PAHZZ	11671	11146	WASHER,FLAT......................... UOC:V53	8
15	PAHZZ	96906	MS90728-127	SCREW,CAP,HEXAGON H................. UOC:V53	8
16	PFHZZ	11671	22090	ESCUTCHEON PLATE.................... UOC:V53	2
17	KFHZZ	11671	20-16KH3390	PIN,STR,HDLS........................ UOC:V53	2
18	PAHZZ	25184	906-6-8309	PACKING,PREFORMED................... UOC:V53	1
19	XDHZZ	11671	65-6BP	PLUG,DRAIN.......................... UOC:V53	1
20	XAHHH	11671	47005	BODY................................ UOC:V53	1
21	XDHZZ	11671	13415	BUSHING............................. UOC:V53	2

END OF FIGURE

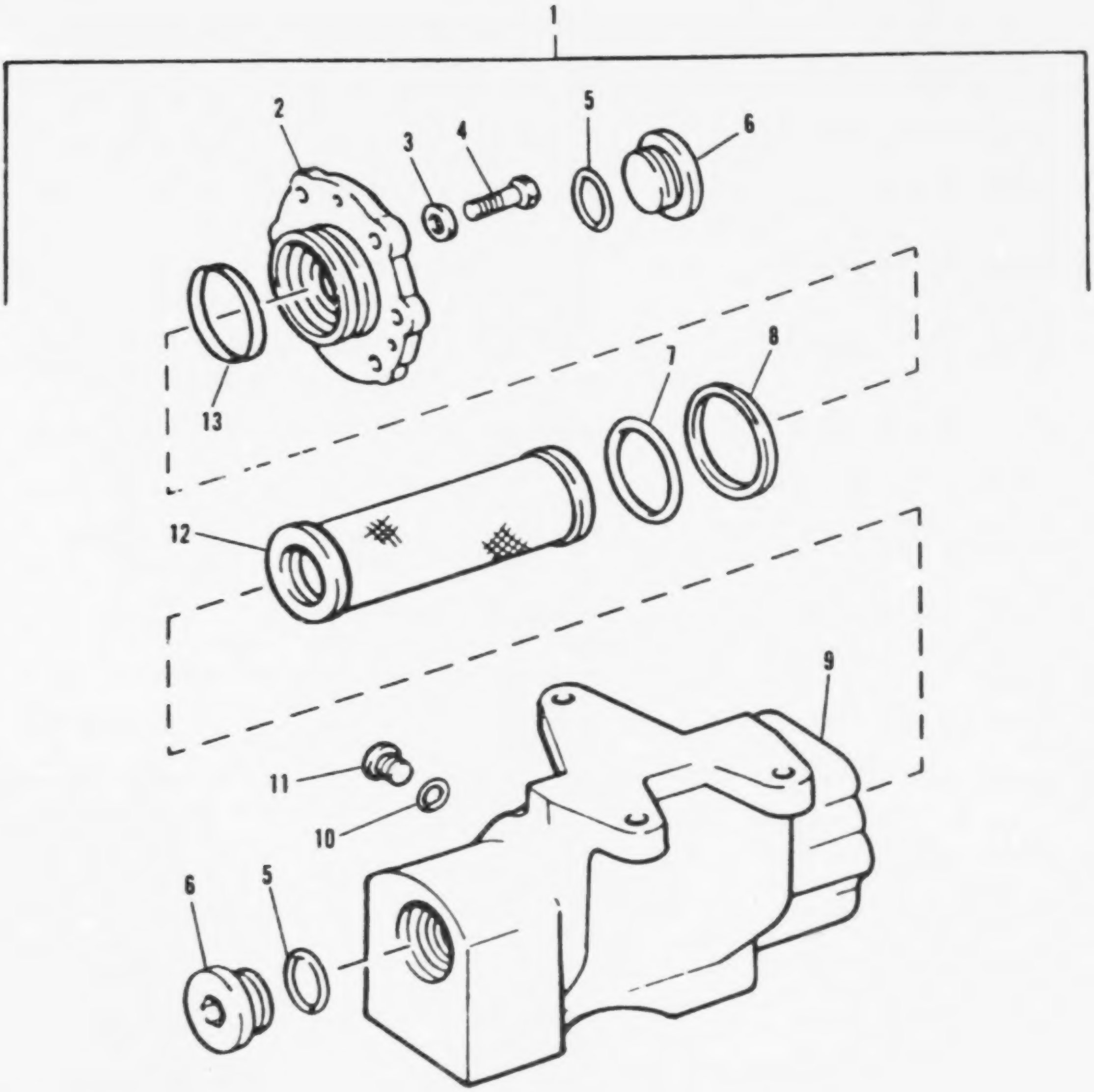

FIGURE 150. STEERING OIL FILTER ASSEMBLY

(1) ITEM NO	(2) SMR CODE	(3) CAGEC	(4) PART NUMBER	(5) DESCRIPTION AND USABLE ON CODES(UOC)	(6) QTY
				GROUP 1411: HOSES, LINES, FITTINGS	
				FIG. 150 STEERING OIL FILTER ASSEMBLY	
1	XDCOO	11C83	3GC839	FILTER, ASSY, OIL....................	1
2	XCOZZ	11C83	8J5594	.COVER,OIL FILTER.................... UOC:V53	1
3	PAOZZ	19207	6299613	.WASHER,FLAT......................... UOC:V53	6
4	PAOZZ	11083	9S1366	.BOLT,MACHINE........................ UOC:V53	6
5	PAOZZ	11C83	2S4078	.PACKING,PREFORMED................... UOC:V53	2
6	PBOZZ	11083	5S8C10	.PLUG,MACHINE THREAD................. UOC:V53	2
7	PAOZZ	11C83	6H3977	.PACKING,PREFORMED................... UOC:V53	1
8	PFOZZ	11083	1S668	.RETAINER,PACKING.................... UOC:V53	1
9	XDOZZ	11083	3G4106	.HOUSING,FILTER...................... UOC:V53	1
10	PAOZZ	25184	906-737-70	.PACKING,PREFORMED................... UOC:V53	1
11	XDOZZ	30780	6HP5N	.PLUG,STR THD........................ UOC:V53	1
12	XDOZZ	11C83	7J2656	.SCREEN ASSY......................... UOC:V53	1
13	PAOZZ	11083	3G3281	.GASKET.............................. UOC:V53	1

END OF FIGURE

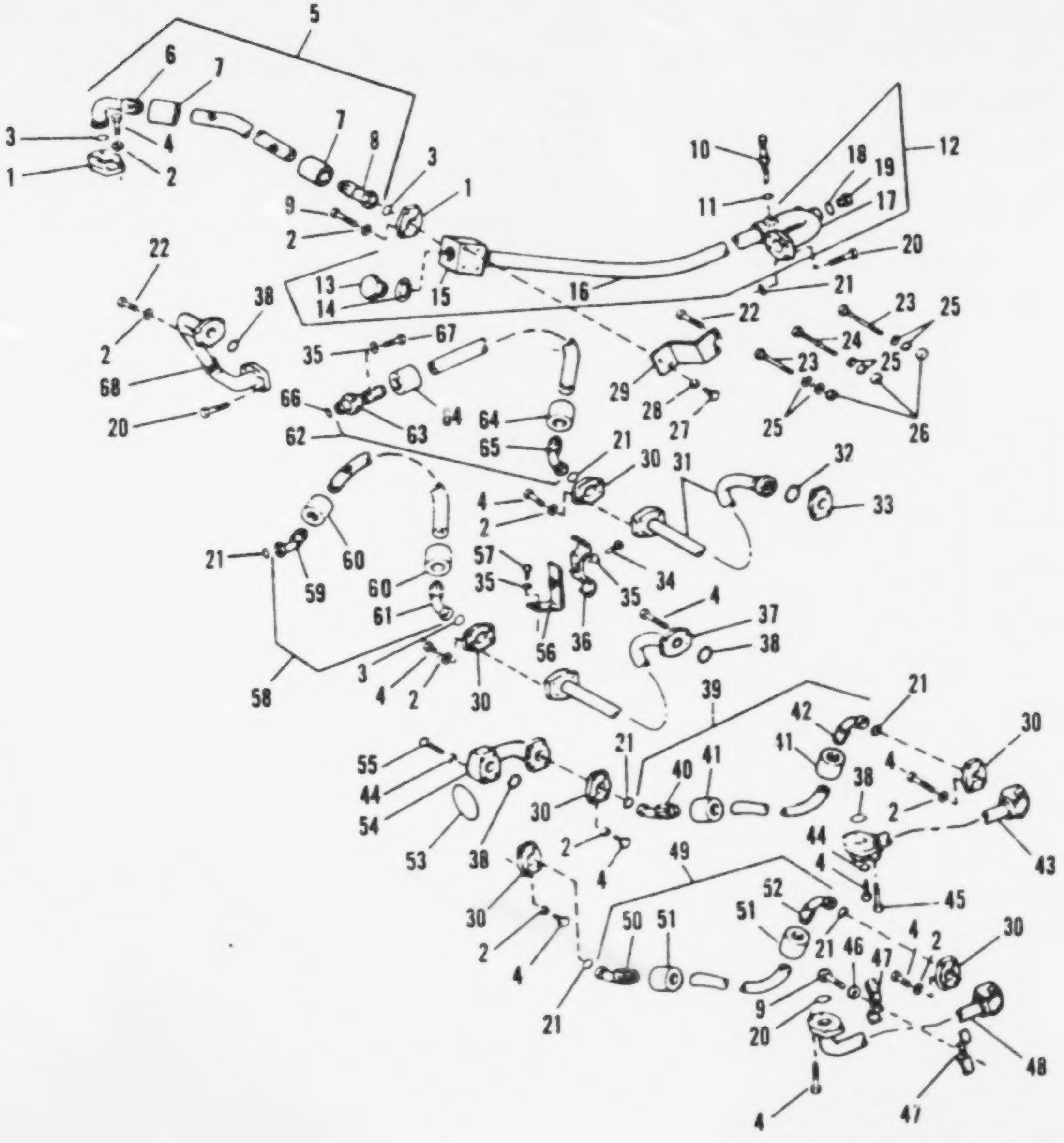

FIGURE 151. SUPPLEMENTAL STEERING LINES

(1) ITEM NO	(2) SMR CODE	(3) CAGEC	(4) PART NUMBER	(5) DESCRIPTION AND USABLE ON CODES(UOC)	(6) QTY
				GROUP 1411: HOSES, LINES, FITTINGS	
				FIG. 151 SUPPLEMENTAL STEERING LINES	
1	PAFZZ	11083	1P4582	FLANGE UOC:V53	8
2	PAFZZ	11083	5P8245	WASHER,FLAT UOC:V53	68
3	PAFZZ	11083	4J0527	SEAL-O-RING UOC:V53	4
4	PAFZZ	11083	S1587	BOLT,MACHINE UOC:V53	4
5	MFFZZ	11083	2V2986	HOSE ASSY MAKE FROM HOSE P/N 8S8220 UOC:V53	1
6	XDFZZ	11083	7S8439	.STEM ASSY UOC:V53	1
7	PFFZZ	11083	3S8330	.SLEEVE UOC:V53	2
8	PFFZZ	11083	7S9370	.ADAPTER,STRAIGHT,FL UOC:V53	1
9	PAFZZ	96906	MS90728-113	SCREW,CAP,HEXAGON H UOC:V53	5
10	PAFZZ	43249	F-75443-AL	SWITCH,PRESSURE UOC:V53	1
11	PAFZZ	81349	M83248-2-908	PACKING,PREFORMED UOC:V53	1
12	XDFFF	11083	4V7056	TUBE ASSY UOC:V53	1
13	PAFZZ	50948	1N5958	.PLUG,MACHINE THREAD UOC:V53	1
14	PAFZZ	11083	1N6002	.PACKING,PREFORMED UOC:V53	1
15	XDFZZ	11083	3P0969	.ELBOW,HYDRAULIC UOC:V53	1
16	XDFZZ	11083	4V6954	.TUBE UOC:V53	1
17	XDFZZ	11083	1V8113	.ELBOW UOC:V53	1
18	PAFZZ	11083	7M8485	.SEAL,ADAPTER,MOTOR UOC:V53	1
19	PAFZZ	11083	9S4181	.PLUG,MACHINE THREAD UOC:V53	1
20	PAFZZ	11083	8M2530	BOLT,MACHINE UOC:V53	8
21	PAFZZ	11083	4J0524	PACKING,PREFORMED UOC:V53	9
22	PAFZZ	11083	1A1460	BOLT,MACHINE UOC:V53	6
23	XDFZZ	11083	1A7669	BOLT,MACHINE UOC:V53	2
24	PAFZZ	11083	2A1531	BOLT,MACHINE UOC:V53	1

(1) ITEM NO	(2) SMR CODE	(3) CAGEC	(4) PART NUMBER	(5) DESCRIPTION AND USABLE ON CODES(UOC)	(6) QTY
25	PAFZZ	19207	6299613	WASHER,FLAT.......................... UOC:V53	6
26	PAFZZ	96906	MS51967-14	NUT,PLAIN,HEXAGON.................... UOC:V53	3
27	PAFZZ	11083	0S1595	BOLT,MACHINE......................... UOC:V53	2
28	PAFZZ	11083	5P1076	WASHER,SHOULDERED A.................. UOC:V53	2
29	XDFZZ	11083	4V7024	BRACKET.............................. UOC:V53	1
30	PFFZZ	11083	1P4579	FLANGE............................... UOC:V53	10
31	XDFZZ	11083	1V9414	TUBE ASSY............................ UOC:V53	1
32	PAFZZ	11083	1P3705	SEAL................................. UOC:V53	1
33	XDFZZ	11083	1P5762	FLANGE,HALF.......................... UOC:V53	2
34	PAFZZ	11083	0S1594	BOLT,MACHINE......................... UOC:V53	1
35	PFFZZ	11083	4B4278	WASHER,FLAT.......................... UOC:V53	5
36	XDFZZ	11083	2V2423	CLAMP................................ UOC:V53	1
37	XDFZZ	11083	1V9415	TUBE ASSY............................ UOC:V53	1
38	PAFZZ	11083	1P3707	PACKING,PREFORMED.................... UOC:V53	4
39	MFFZZ	11083	3V2660	HOSE ASSY MAKE FROM HOSE P/N 8S8220 UOC:V53	1
40	PBFZZ	11083	3S9329	.ELBOW,FLANGE TO HOS................. UOC:V53	1
41	PAFZZ	11083	3S8330	.SLEEVE.............................. UOC:V53	2
42	XDFZZ	11083	3S9331	.STEM ASSY........................... UOC:V53	1
43	XDFZZ	11083	2V7709	TUBE ASSY............................ UOC:V53	1
44	PAFZZ	96906	MS35338-48	WASHER,LOCK.......................... UOC:V53	8
45	PAFZZ	11083	L1329	BOLT,MACHINE......................... UOC:V53	2
46	PAFZZ	11083	5P1076	WASHER,SHOULDERED A.................. UOC:V53	1
47	XDFZZ	11083	9K2522	CLAMP................................ UOC:V53	2
48	XDFZZ	11083	2V7708	TUBE ASSY............................ UOC:V53	1
49	MFFZZ	11083	3V2661	HOSE ASSY MAKE FROM HOSE P/N 8S8220 UOC:V53	1
50	XDFZZ	11083	3S9330	.STEM ASSY........................... UOC:V53	1

(1) ITEM NO	(2) SMR CODE	(3) CAGEC	(4) PART NUMBER	(5) DESCRIPTION AND USABLE ON CODES(UOC)	(6) QTY
51	PFFZZ	11083	3S8330	.SLEEVE............................... UOC:V53	2
52	XDFZZ	11083	3S9331	.STEM ASSY............................ UOC:V53	1
53	PAFZZ	11083	5F3106	PACKING,PREFORMED..................... UOC:V53	1
54	XDFZZ	11083	3VC839	ELBOW................................. UOC:V53	1
55	PAFZZ	11083	1D4566	BOLT,MACHINE.......................... UOC:V53	4
56	XDFZZ	11083	2V2421	BRACKET ASSY.......................... UOC:V53	1
57	PAFZZ	96906	MS18154-58	SCREW,CAP,HEXAGON H................... UOC:V53	2
58	MFFZZ	11083	2V2979	HOSE ASSY MAKE FROM HOSE P/N 8S8220 UOC:V53	2
59	XDFZZ	11083	3S9327	.STEM ASSY............................ UOC:V53	1
60	PFFZZ	11083	3S8330	.SLEEVE............................... UOC:V53	2
61	XDFZZ	11083	5P3229	.STEM ASSY............................ UOC:V53	1
62	MFFZZ	11083	2V2988	HOSE ASSY MAKE FROM HOSE P/N 5P182. UOC:V53	1
63	XDFZZ	11083	7S1074	.STEM ASSY............................ UOC:V53	1
64	PFFZZ	11083	3S7116	.SLEEVE............................... UOC:V53	2
65	XDFZZ	11083	8S8957	.STEM ASSY............................ UOC:V53	1
66	PAFZZ	11083	4J0522	.PACKING,PREFORMED.................... UOC:V53	1
67	PAFZZ	11083	0S1571	SCREW,CAP,HEXAGON H................... UOC:V53	2
68	XDFZZ	11083	4V7055	TUBE ASSY............................. UOC:V53	1

END OF FIGURE

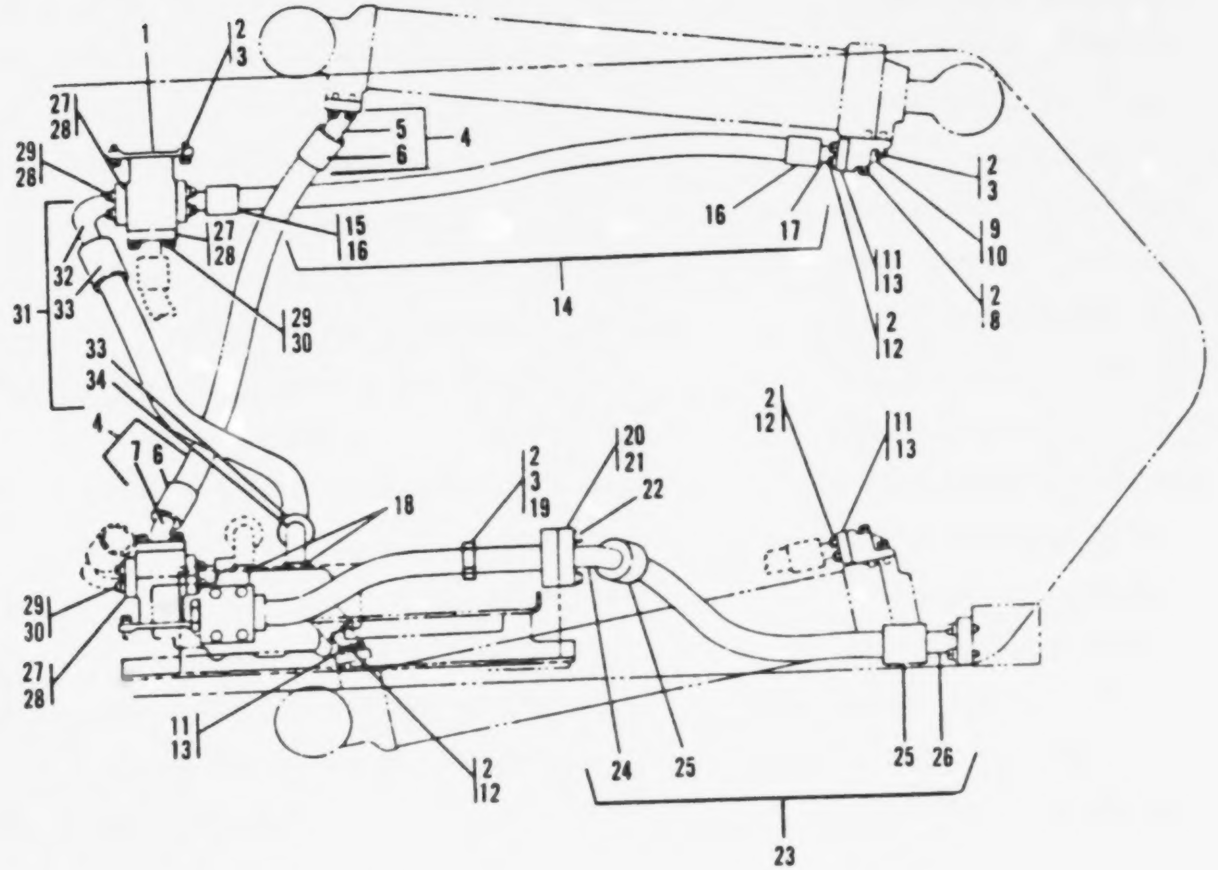

FIGURE 152. STEERING OIL LINES

(1) ITEM NO	(2) SMR CODE	(3) CAGEC	(4) PART NUMBER	(5) DESCRIPTION AND USABLE ON CODES(UOC)	(6) QTY
				GROUP 1411: HOSES, LINES, FITTINGS	
				FIG. 152 STEERING OIL LINES	
1	XDFZZ	11083	5V5734	MANIFOLD............................ UOC:V53	2
2	PAFZZ	11083	5M2894	WASHER,FLAT......................... UOC:V53	33
3	PAFZZ	11083	0S1588	BOLT,MACHINE........................ UOC:V53	12
4	MFFZZ	11083	2V6761	HOSE ASSY MAKE FROM HOSE P/N 5P181. UOC:V53	1
5	PBFZZ	11083	3S8459	.ELBOW,FLANGE TO HOS................ UOC:V53	1
6	PAFZZ	11083	3S7252	.SLEEVE............................. UOC:V53	2
7	XDFZZ	11083	7S0572	.STEM ASSY.......................... UOC:V53	1
8	PAFZZ	11083	0S1619	BOLT,MACHINE........................ UOC:V53	4
9	XDFZZ	11083	2V6746	ELBOW............................... UOC:V53	2
10	PAFZZ	11083	4J0520	PACKING,PREFORMED................... UOC:V53	2
11	PBFZZ	11083	1P4577	FLANGE,PIPE......................... UOC:V53	8
12	PAFZZ	96906	MS90728-63	SCREW,CAP,HEXAGON H................. UOC:V53	16
13	PAFZZ	11083	4J0520	PACKING,PREFORMED................... UOC:V53	4
14	MFFZZ	11083	2V6758	HOSE ASSY MAKE FROM HOSE P/N 5P181. UOC:V53	2
15	PBFZZ	11083	3S8456	.ADAPTER,STRAIGHT,FL................ UOC:V53	1
16	PBFZZ	11083	3S7252	.SLEEVE............................. UOC:V53	2
17	PFFZZ	11083	7S0570	.ADAPTER,STRAIGHT,FL................ UOC:V53	1
18	PAFZZ	11083	4J0524	PACKING,PREFORMED................... UOC:V53	2
19	PAFZZ	15564	1377A	NUT,PLAIN,HEXAGON................... UOC:V53	1
20	PAFZZ	11083	4J0527	SEAL-O-RING......................... UOC:V53	2
21	PAFZZ	11083	1P4582	FLANGE.............................. UOC:V53	4
22	PAFZZ	11083	S1587	BOLT,MACHINE........................ UOC:V53	8
23	MFFZZ	11083	4V7991	HOSE ASSY MAKE FROM HOSE P/N 8S8220 UOC:V53	1
24	XDFZF	11083	8S3649	.STEM ASSY.......................... UOC:V53	1

(1) ITEM NO	(2) SMR CODE	(3) CAGEC	(4) PART NUMBER	(5) DESCRIPTION AND USABLE ON CODES(UOC)	(6) QTY
25	PBFZZ	11083	3S8330	.SLEEVE.............................. UOC:V53	2
26	PBFZZ	11083	7S9370	.ADAPTER,STRAIGHT,FL................ UOC:V53	1
27	PBFZZ	11083	1P4578	FLANGE,PIPE......................... UOC:V53	14
28	PAFZZ	11083	4J0522	PACKING,PREFORMED................... UOC:V53	6
29	PAFZZ	11083	5P8244	WASHER,FLAT......................... UOC:V53	24
30	PAFZZ	11083	3H5368	BOLT,MACHINE........................ UOC:V53	24
31	MFFZZ	11083	2V2108	HOSE ASSEMBLY MAKE FROM HOSE P/N 5P182............................. UOC:V53	1
32	XDFZZ	11083	7S1707	.STEM ASSY.......................... UOC:V53	1
33	PBFZZ	11083	3S7116	.SLEEVE............................. UOC:V53	2
34	PBFZZ	11083	5S3777	.ELBOW,FLANGE TO HOS................ UOC:V53	1

END OF FIGURE

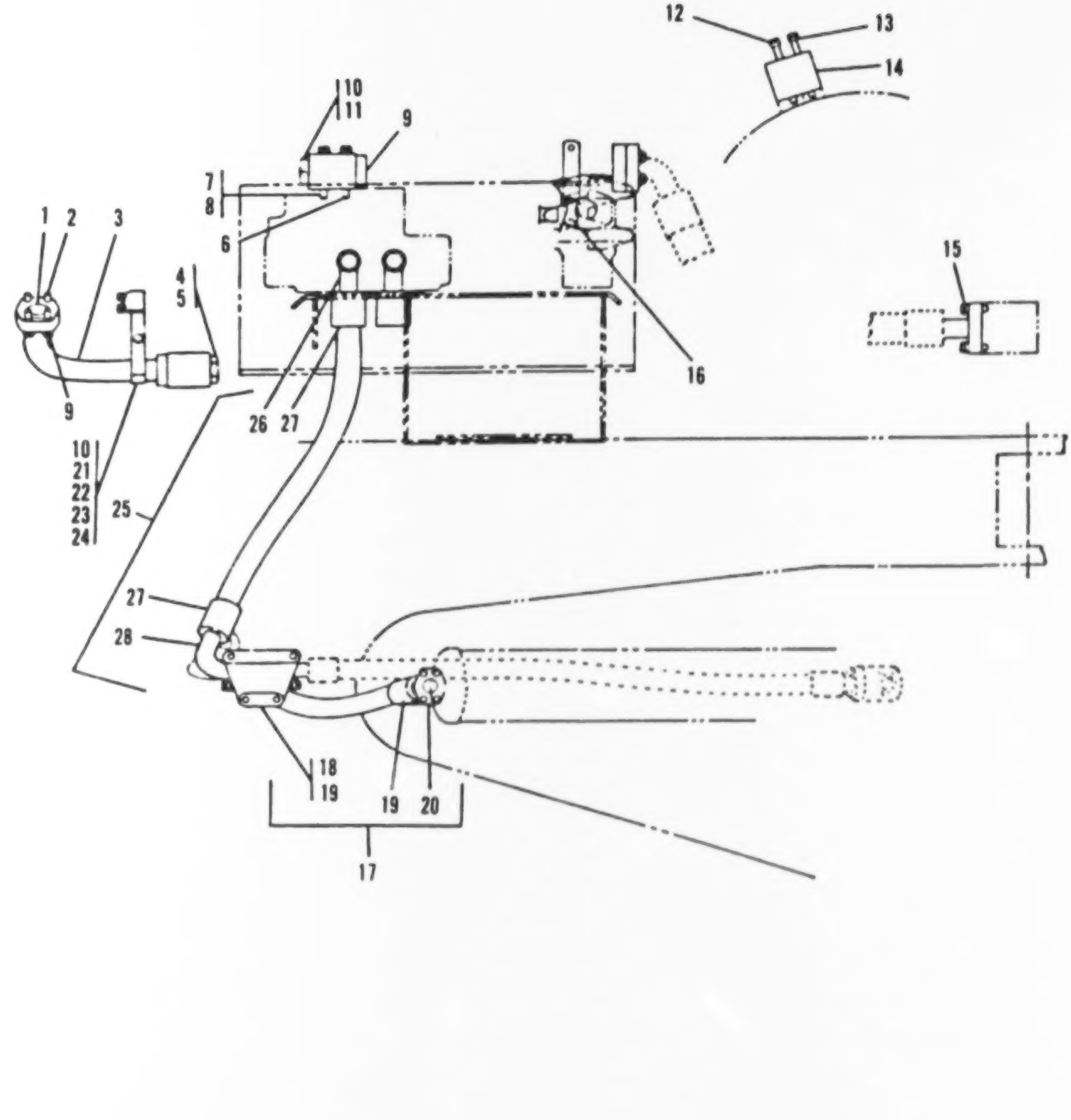

FIGURE 153. STEERING OIL LINES

(1) ITEM NO	(2) SMR CODE	(3) CAGEC	(4) PART NUMBER	(5) DESCRIPTION AND USABLE ON CODES(UOC)	(6) QTY
				GROUP 1411: HOSES, LINES, FITTINGS	
				FIG. 153 STEERING OIL LINES	
1	PAFZZ	11083	1A1460	BOLT,MACHINE.......................... UOC:V53	4
2	PAFZZ	11083	1P3707	PACKING,PREFORMED..................... UOC:V53	2
3	XDFFF	11083	4V6148	TUBE ASSY............................. UOC:V53	1
4	PAFZZ	50948	1N5998	PLUG,MACHINE THREAD................... UOC:V53	1
5	PAFZZ	11083	1N6002	PACKING,PREFORMED..................... UOC:V53	1
6	PAFZZ	11083	1P3709	PACKING,PREFORMED..................... UOC:V53	1
7	PAFZZ	11083	1B2886	BOLT,MACHINE.......................... UOC:V53	4
8	PAFZZ	11083	5P8245	WASHER,FLAT........................... UOC:V53	8
9	XDFFF	11083	4V7552	TUBE ASSY............................. UOC:V53	1
10	PAFZZ	50948	1N5958	PLUG,MACHINE THREAD................... UOC:V53	1
11	PAFZZ	11083	1N6002	PACKING,PREFORMED..................... UOC:V53	1
12	PAFZZ	11083	2H6488	SCREW,CAP,HEXAGON H................... UOC:V53	4
13	PAFZZ	11083	4B4280	WASHER,FLAT........................... UOC:V53	6
14	XDFZZ	11083	1V5259	BLOCK................................. UOC:V53	1
15	PAFZZ	11083	5P8245	WASHER,FLAT........................... UOC:V53	8
16	XDFZZ	11083	5V1019	CLAMP................................. UOC:V53	2
17	MFFZZ	11083	2V2109	HOSE ASSY MAKE FROM HOSE P/N 5P182. UOC:V53	1
18	PBFZZ	11083	5S3777	.ELBOW,FLANGE TO HOS.................. UOC:V53	1
19	PBFZZ	11083	3S7116	.SLEEVE............................... UOC:V53	2
20	XDFZZ	11083	7S1707	.STEM ASSY............................ UOC:V53	1
21	XDFZZ	11083	5V5802	BRACKET............................... UOC:V53	1
22	PAFZZ	11083	1P8016	CLAMP,LOOP............................ UOC:V53	1
23	PAFZZ	11083	7B3235	BOLT,MACHINE.......................... UOC:V53	1
24	PAFZZ	96906	MS51967-14	NUT,PLAIN,HEXAGON..................... UOC:V53	1

(1) ITEM NO	(2) SMR CODE	(3) CAGEC	(4) PART NUMBER	(5) DESCRIPTION AND USABLE ON CODES(UOC)	(6) QTY
25	MFFZZ	11083	2V6760	HOSE ASSY MAKE FROM HOSE P/N 5P181. UOC:V53	1
26	PFFZZ	11083	7S0570	.ADAPTER,STRAIGHT,FL................ UOC:V53	1
27	PBFZZ	11083	3S7252	.SLEEVE............................. UOC:V53	2
28	XDFZZ	11083	3S8498	.STEM ASSY.......................... UOC:V53	1

END OF FIGURE

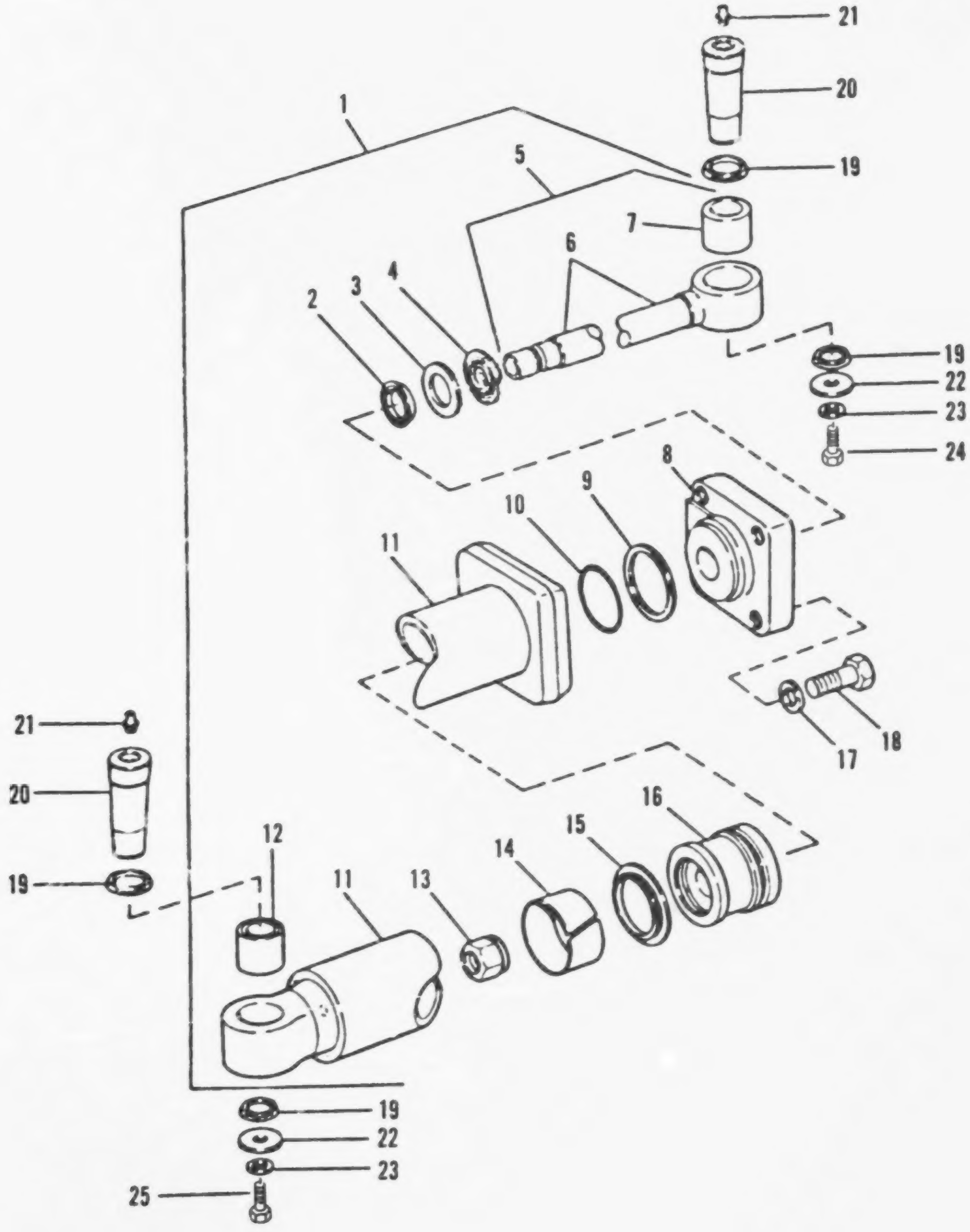

FIGURE 154. STEERING CYLINDER AND MOUNTING

(1) ITEM NO	(2) SMR CODE	(3) CAGEC	(4) PART NUMBER	(5) DESCRIPTION AND USABLE ON CODES(UOC)	(6) QTY
				GROUP 1412: HYDRAULIC OR AIR CYLINDERS	
				FIG. 154 STEERING CYLINDER AND MOUNTING	
1	XBHHH	11083	9J8165	CYLINDER GRP........................ UOC:V53	2
2	PAHZZ	11083	5J3616	.GASKET............................. UOC:V53	1
3	PAHZZ	73680	17159-1109	.PACKING,PREFORMED.................. UOC:V53	1
4	PAHZZ	11083	4J3515	.SEAL,PLAIN ENCASED................. UOC:V53	1
5	XBHHH	11083	9J8171	.ROD ASSY........................... UOC:V53	1
6	XDHZZ	11083	9J8172	..ROD,PISTON........................ UOC:V53	1
7	XDHZZ	11083	9J5875	..BEARING,SLEEVE.................... UOC:V53	1
8	XBHZZ	11083	3G9886	.HEAD............................... UOC:V53	1
9	PAHZZ	11083	2K4096	.GASKET............................. UOC:V53	1
10	PAHZZ	11083	5F3144	.PACKING,PREFORMED.................. UOC:V53	1
11	XBHZZ	11083	9J8166	.CYLINDER ASSY...................... UOC:V53	1
12	XBFZZ	11083	9J5875	.BEARING,SLEEVE..................... UOC:V53	1
13	PAHZZ	11083	5J5731	.NUT,SELF-LOCKING,HE................ UOC:V53	1
14	PAHZZ	11083	4J3420	.RING,WIPER......................... UOC:V53	1
15	PAHZZ	11083	5J5020	.RING,WIPER......................... UOC:V53	1
16	PBHZZ	11083	7J5525	.PISTON............................. UOC:V53	1
17	PAHZZ	11083	5P8248	.WASHER,FLAT........................ UOC:V53	4
18	PAHZZ	11083	1A8063	.BOLT,MACHINE....................... UOC:V53	4
19	PAFZZ	11083	7K9204	SEAL................................ UOC:V53	8
20	XDFZZ	11083	2V4700	PIN,STR,HDLS........................ UOC:V53	4
21	XDFZZ	95879	1610-BL	FITTING,HYDR........................ UOC:V53	2
22	PFFZZ	11083	9M2421	WASHER,FLAT......................... UOC:V53	4
23	PAFZZ	11083	2S0115	WASHER,FLAT......................... UOC:V53	4

(1) ITEM NO	(2) SMR CODE	(3) CAGEC	(4) PART NUMBER	(5) DESCRIPTION AND USABLE ON CODES(UOC)	(6) QTY
24	PAFZZ	11083	1D46C8	BOLT,MACHINE........................ UOC:V53	2
25	PAFZZ	11083	0L1178	BOLT,MACHINE........................ UOC:V53	2

END OF FIGURE

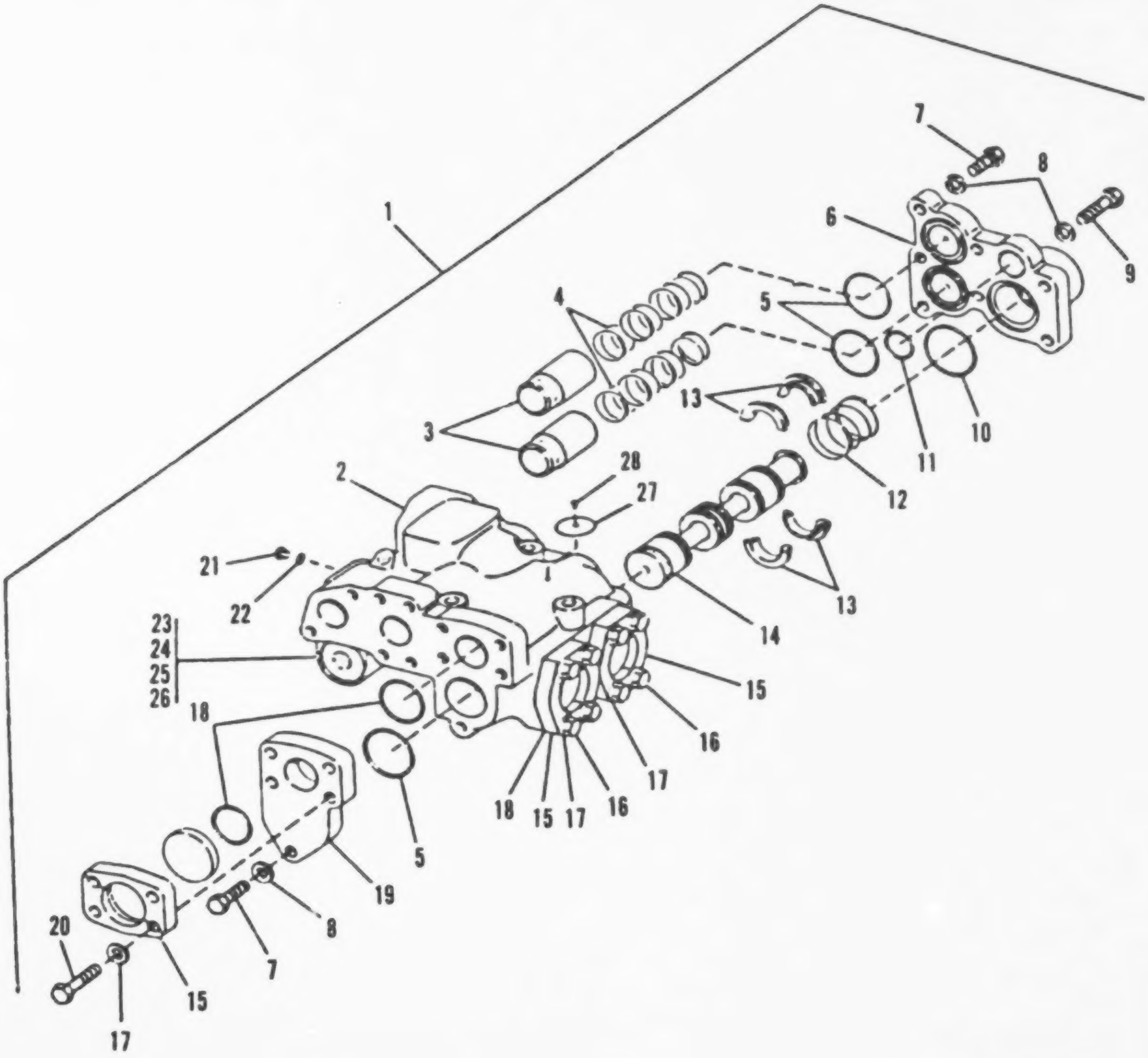

FIGURE 155. DIVERTER VALVE ASSEMBLY

GROUP 1414: STEERING SYSTEM VALVES

FIG. 155 DIVERTER VALVE ASSEMBLY

(1) ITEM NO	(2) SMR CODE	(3) CAGEC	(4) PART NUMBER	(5) DESCRIPTION AND USABLE ON CODES(UOC)	(6) QTY
1	XDFHH	11083	8J6C59	VALVE GRP,DIVERTER UOC:V53	1
2	XDHHH	11083	8J6790	.VALVE GRP UOC:V53	1
3	PFHZZ	11083	1J8945	.VALVE UOC:V53	2
4	PBFZZ	11083	1J9533	.SPRING,HELICAL,COMP UOC:V53	2
5	PAHZZ	11083	4J525	.PACKING,PREFORMED UOC:V53	3
6	XDHZZ	11083	8J6784	.COVER UOC:V53	1
7	PAHZZ	11083	S1587	.BOLT,MACHINE UOC:V53	7
8	PAHZZ	96906	MS35338-48	.WASHER,LOCK UOC:V53	8
9	PAHZZ	11083	1B2886	.BOLT,MACHINE UOC:V53	1
10	PAHZZ	11083	4J528	.PACKING,PREFORMED UOC:V53	1
11	PAHZZ	81349	M83248/2-216	.PACKING,PREFORMED UOC:V53	1
12	XDHZZ	11083	8J6785	.SPRING UOC:V53	1
13	PFHZZ	11083	3S3433	.BEARING,SLEEVE UOC:V53	4
14	XDHZZ	11083	8J6788	.STEM UOC:V53	1
15	PFHZZ	11083	1P4579	.FLANGE UOC:V53	6
16	PAHZZ	96906	MS90728-113	.SCREW,CAP,HEXAGON H UOC:V53	8
17	PAHZZ	11083	4B4280	.WASHER,FLAT UOC:V53	12
18	PAHZZ	11083	4J0524	.PACKING,PREFORMED UOC:V53	4
19	XDHZZ	11083	8J6782	.COVER UOC:V53	1
20	PAHZZ	11083	6B2121	.SCREW,CAP,HEXAGON H UOC:V53	4
21	PAHZZ	11083	4J7533	.PLUG,MACHINE THREAD UOC:V53	3
22	PAHZZ	11083	4J7533	.PLUG,MACHINE THREAD UOC:V53	3
23	PAHZZ	11083	9S8010	.PLUG,MACHINE THREAD UOC:V53	2
24	PAHZZ	11083	2S4078	.PACKING,PREFORMED UOC:V53	2

(1) ITEM NO	(2) SMR CODE	(3) CAGEC	(4) PART NUMBER	(5) DESCRIPTION AND USABLE ON CODES(UOC)	(6) QTY
25	PAHZZ	11083	5J9101	.SHIM............................. UOC:V53	12
26	XDHZZ	11083	5J3419	.SPRING........................... UOC:V53	1
27	XDHZZ	11083	8J6783	.PLATE,IDENT...................... UOC:V53	1
28	PAHZZ	11083	7B3028	.SCREW,DRIVE...................... UOC:V53	1

END OF FIGURE

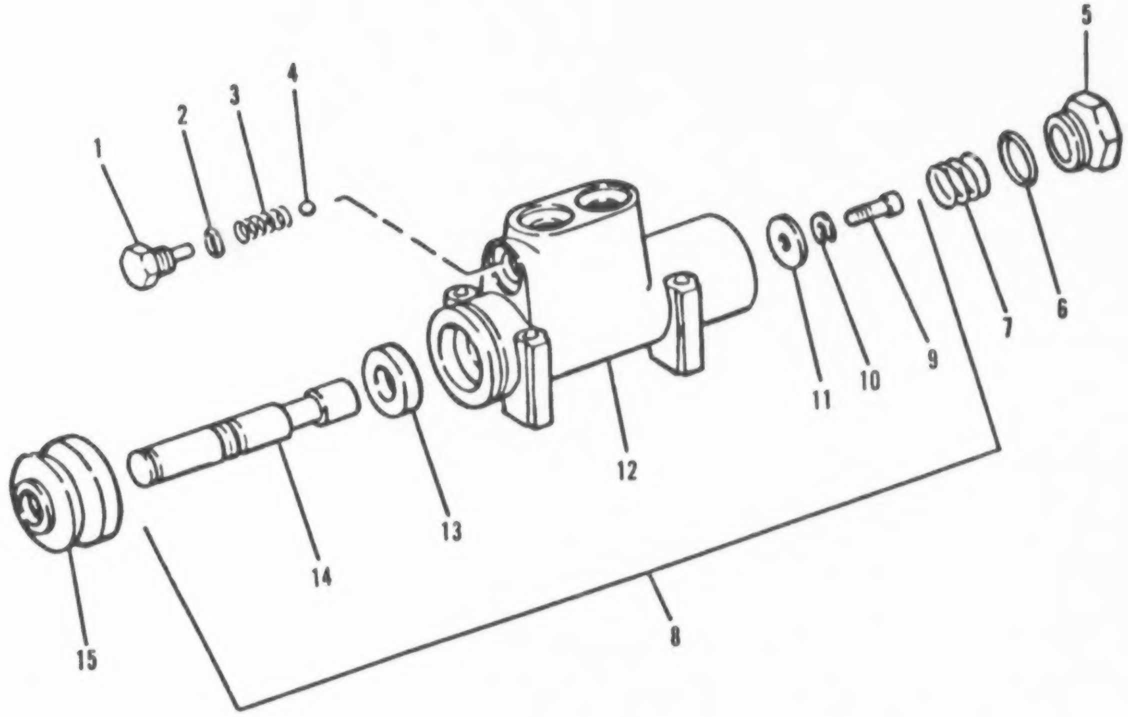

FIGURE 156. STEERING NEUTRALIZER VALVE ASSEMBLY

GROUP 1414: STEERING SYSTEM VALVES

FIG. 156 STEERING NEUTRALIZER VALVE ASSEMBLY

(1) ITEM NO	(2) SMR CODE	(3) CAGEC	(4) PART NUMBER	(5) DESCRIPTION AND USABLE ON CODES(UOC)	(6) QTY
1	PAHZZ	11083	9S6155	SETSCREW................................ UOC:V53	1
2	PAHZZ	81349	M83248/2-905	PACKING,PREFORMED.................... UOC:V53	1
3	PFHZZ	11083	1A8056	SPRING,HELICAL,COMP................ UOC:V53	1
4	PBHZZ	11083	4B5782	BALL,BEARING.......................... UOC:V53	1
5	PAHZZ	11083	9J477	PLUG,MACHINE THREAD................ UOC:V53	1
6	PAHZZ	81349	M83248/2-914	PACKING,PREFORMED.................... UOC:V53	1
7	PBHZZ	11083	7B8194	SPRING,HELICAL,COMP................ UOC:V53	1
8	PAHZZ	11083	8J1552	VALVE,AIR PRESSURE.................. UOC:V53	1
9	PAHZZ	11083	6J4608	.SCREW,CAP,SOCKET HE............... UOC:V53	1
10	PAHZZ	96906	MS35338-45	.WASHER,LOCK.......................... UOC:V53	1
11	PAHZZ	71791	128930-1	.WASHER,FLAT.......................... UOC:V53	1
12	XAHZZ	11083	8J2010	.BODY,CONTROL VALVE................. UOC:V53	1
13	PAHZZ	73680	23548-4754	.SEAL,PLAIN ENCASED................. UOC:V53	1
14	XDHZZ	11083	8J1559	.STEM,VALVE............................ UOC:V53	1
15	PAHZZ	11083	6J463	BOOT,DUST AND MOIST................ UOC:V53	1

END OF FIGURE

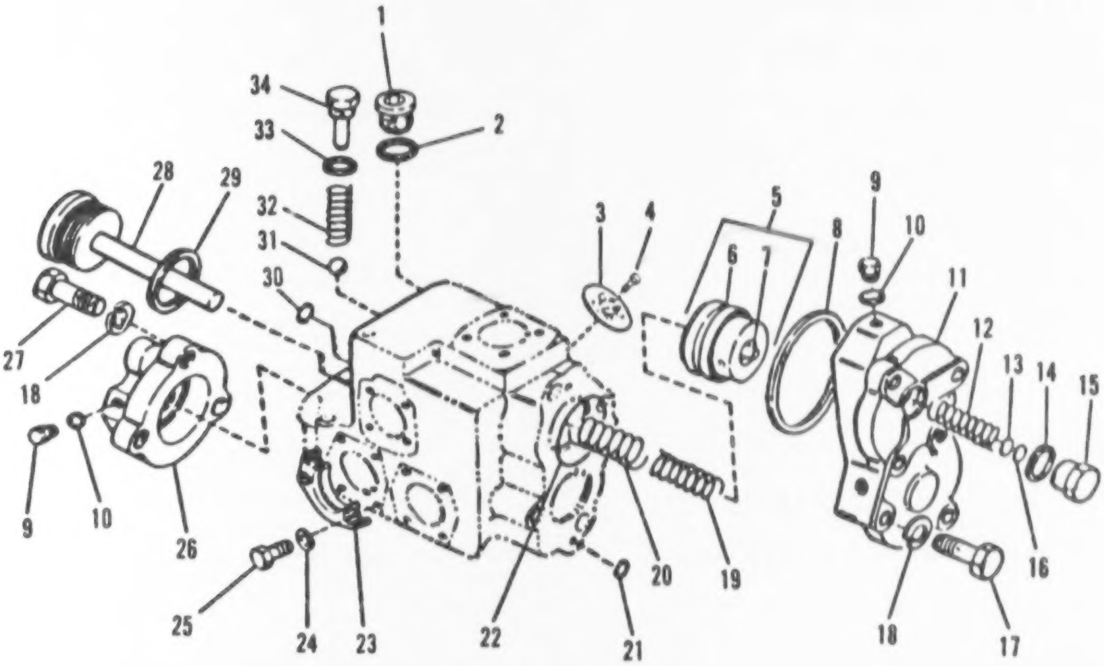

FIGURE 157. STEERING VALVE ASSEMBLY

(1) ITEM NO	(2) SMR CODE	(3) CAGEC	(4) PART NUMBER	(5) DESCRIPTION AND USABLE ON CODES(UOC)	(6) QTY
				GROUP 1414: STEERING SYSTEM VALVES	
				FIG. 157 STEERING VALVE ASSEMBLY	
1	PAHZZ	11083	9S8008	PLUG.............................. UOC:V53	1
2	PAHZZ	99517	A180-11SMILP25732	PACKING,PREFORMED.................. UOC:V53	1
3	XDHZZ	11083	8J3813	PLATE,IDENT........................ UOC:V53	1
4	PAHZZ	11083	7B3028	SCREW,DRIVE........................ UOC:V53	1
5	XDHHH	11083	9J8225	VALVE GRP.......................... UOC:V53	1
6	XDHZZ	11083	6J0428	.SEAT,PILOT........................ UOC:V53	1
7	PAHZZ	11083	1J8497	.VALVE............................. UOC:V53	1
8	PAHZZ	11083	4J0524	PACKING,PREFORMED.................. UOC:V53	1
9	PAHZZ	11083	4J7533	PLUG,MACHINE THREAD................ UOC:V53	3
10	PAHZZ	11083	4J7533	PLUG,MACHINE THREAD................ UOC:V53	3
11	XDHZZ	11083	8J3665	COVER.............................. UOC:V53	1
12	PBHZZ	11083	4F7115	SPRING,HELICAL,COMP................ UOC:V53	1
13	PAHZZ	11083	3J7473	SHIM............................... UOC:V53	1
14	PAHZZ	81349	M83248-2-908	PACKING,PREFORMED.................. UOC:V53	1
15	PAHZZ	11083	9S4187	PLUG............................... UOC:V53	1
16	PAHZZ	11083	3H2549	DISK,SOLID,PLAIN................... UOC:V53	7
17	XBFZZ	11083	B2886	SCREW,CAPHEX HD.................... UOC:V53	6
18	PAHZZ	96906	MS35338-48	WASHER,LOCK........................ UOC:V53	9
19	PFHZZ	11083	8J2635	SPRING............................. UOC:V53	1
20	XDHZZ	11083	8J2634	SPRING............................. UOC:V53	1
21	PAHZZ	81349	M83248/2-110	PACKING,PREFORMED.................. UOC:V53	4
22	PAHZZ	11083	4J528	PACKING,PREFORMED.................. UOC:V53	2
23	XBFZZ	11083	1P4579	.FLANGE............................ UOC:V53	6
24	PAHZZ	11083	4B4280	WASHER,FLAT........................ UOC:V53	12

(1) ITEM NO	(2) SMR CODE	(3) CAGEC	(4) PART NUMBER	(5) DESCRIPTION AND USABLE ON CODES(UOC)	(6) QTY
25	PAHZZ	96906	MS90728-113	SCREW,CAP,HEXAGON H................ UOC:V53	12
26	XDHZZ	11083	8J3664	COVER................................ UOC:V53	1
27	PAHZZ	11083	2B947	BOLT,MACHINE........................ UOC:V53	12
28	XDHHH	11083	8J3659	STOP ASSY........................... UOC:V53	1
29	PAHZZ	11083	2S4078	PACKING,PREFORMED................... UOC:V53	1
30	PAHZZ	81349	M83248/2-227	PACKING,PREFORMED................... UOC:V53	1
31	PBHZZ	11083	4B9782	BALL,BEARING........................ UOC:V53	1
32	PFHZZ	11083	9H2367	SPRING,HELICAL,COMP................. UOC:V53	1
33	PAHZZ	25184	906-737-70	PACKING,PREFORMED................... UOC:V53	1
34	XDHZZ	11083	9S6154	.SETSCREW........................... UOC:V53	1

END OF FIGURE

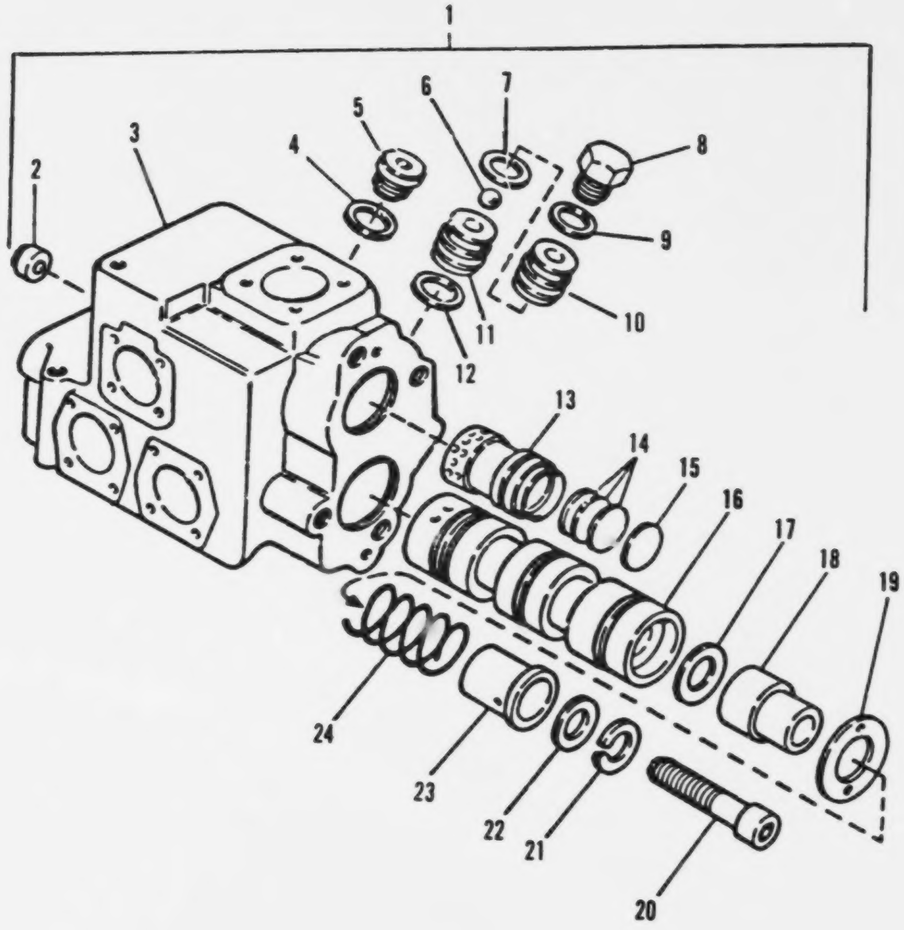

FIGURE 158. STEERING VALVE ASSEMBLY

(1) ITEM NO	(2) SMR CODE	(3) CAGEC	(4) PART NUMBER	(5) DESCRIPTION AND USABLE ON CODES(UOC)	(6) QTY
				GROUP 1414: STEERING SYSTEM VALVES	
				FIG. 158 STEERING VALVE ASSEMBLY	
1	XDFHH	11083	8J3667	VALVE GRP................................ UOC:V53	1
2	XAHZZ	11083	9J9821	.SPACER,SLEEVE........................ UOC:V53	1
3	XAHZZ	11083	8J3666	.BODY,STEERING VALVE................ UOC:V53	1
4	PAHZZ	11083	4J7533	.PLUG,MACHINE THREAD................ UOC:V53	5
5	PAHZZ	11083	4J7533	.PLUG,MACHINE THREAD................ UOC:V53	5
6	PBHZZ	11083	4B9782	.BALL,BEARING........................ UOC:V53	1
7	PAHZZ	25184	906-737-70	.PACKING,PREFORMED.................. UOC:V53	1
8	PAHZZ	11083	9S4185	.PLUG,MACHINE THREAD................ UOC:V53	1
9	PAHZZ	81349	M83248-2-908	.PACKING,PREFORMED.................. UOC:V53	1
10	PBHZZ	11083	8J0507	.SEAT.................................. UOC:V53	1
11	AHHZZ	11083	7J8066	.SEAT ASSEMBLY FROM PN'S 4T317 AND 1J9671 AS REQUIRED.................. UOC:V53	1
12	PAHZZ	81349	M83248/2-905	.PACKING,PREFORMED.................. UOC:V53	1
13	XAHZZ	11083	8J2636	.VALVE................................. UOC:V53	1
14	XDHZZ	11083	7M8538	.SPACER................................ UOC:V53	3
15	XDHZZ	11083	8M8211	.SPACER................................ UOC:V53	1
16	XDHZZ	11083	8J2388	.STEM,VALVE........................... UOC:V53	1
17	PAHZZ	11083	8B3115	.SHIM.................................. UOC:V53	V
18	XDHZZ	11083	8J3660	.RETAINER.............................. UOC:V53	1
19	XDHZZ	11083	8J3662	.SPACER................................ UOC:V53	1
20	XDHZZ	11083	5S2389	.SCREW,CAP,SOCKET HE................. UOC:V53	1
21	PAHZZ	96906	MS35338-48	.WASHER,LOCK.......................... UOC:V53	1
22	PAHZZ	11083	4B4280	.WASHER,FLAT.......................... UOC:V53	1
23	XDHZZ	11083	8J3661	.RETAINER.............................. UOC:V53	1
24	PBHZZ	11083	9J4071	SPRING,HELICAL,COMP..................	1

(1) ITEM NO	(2) SMR CODE	(3) CAGEC	(4) PART NUMBER	(5) DESCRIPTION AND USABLE ON CODES(UOC)	(6) QTY
				UOC:V53	

END OF FIGURE

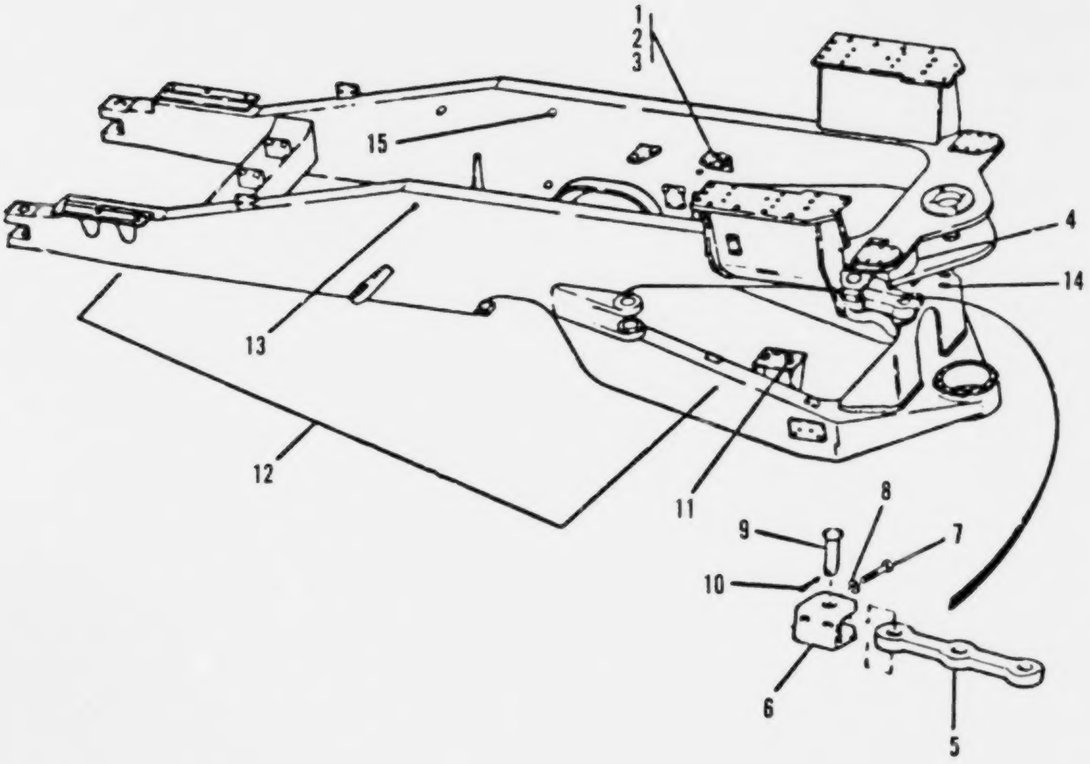

FIGURE 159. FRAME ASSEMBLY, REAR

GROUP 15: FRAME, TOWING ATTACHMENTS AND DRAWBARS

GROUP 1501: FRAME ASSEMBLY

FIG. 159 FRAME ASSEMBLY, REAR

(1) ITEM NO	(2) SMR CODE	(3) CAGEC	(4) PART NUMBER	(5) DESCRIPTION AND USABLE ON CODES(UOC)	(6) QTY
1	PAFZZ	11083	L1169	BOLT,MACHINE......................... UOC:V53	4
2	PAFZZ	27315	2045V007	NUT,PLAIN,HEXAGON................. UOC:V53	12
3	PAFZZ	96906	MS35340650	WASHER,LOCK......................... UOC:V53	12
4	XAFZZ	11083	5R3731	BLOCK................................ UOC:V53	2
5	XBOZZ	11083	1V7943	LINK,SHIPPING....................... UOC:V53	1
6	XBOZZ	11083	1V7940	BRACKET.............................. UOC:V53	1
7	PAOZZ	11083	7B3235	BOLT,MACHINE......................... UOC:V53	2
8	PFFZZ	11083	2M849	WASHER,FLAT......................... UOC:V53	2
9	PAOZZ	11083	9K5639	PIN,STRAIGHT,HEADED................ UOC:V53	2
10	PAOZZ	96906	MS24665-752	PIN,COTTER.......................... UOC:V53	2
11	PAFZZ	20680	6028	BOLT,MACHINE......................... UOC:V53	8
12	XDFHH	11083	2V3145	FRAME ASSY,ENG END................. UOC:V53	1
13	PAHZZ	11083	5P1778	.STUD,WELDING....................... UOC:V53	14
14	PAHZZ	84483	0C7-863	.STUD,WELDING....................... UOC:V53	2
15	PAHZZ	10180	101-C15-502	.STUD,WELDING....................... UOC:V53	1

END OF FIGURE

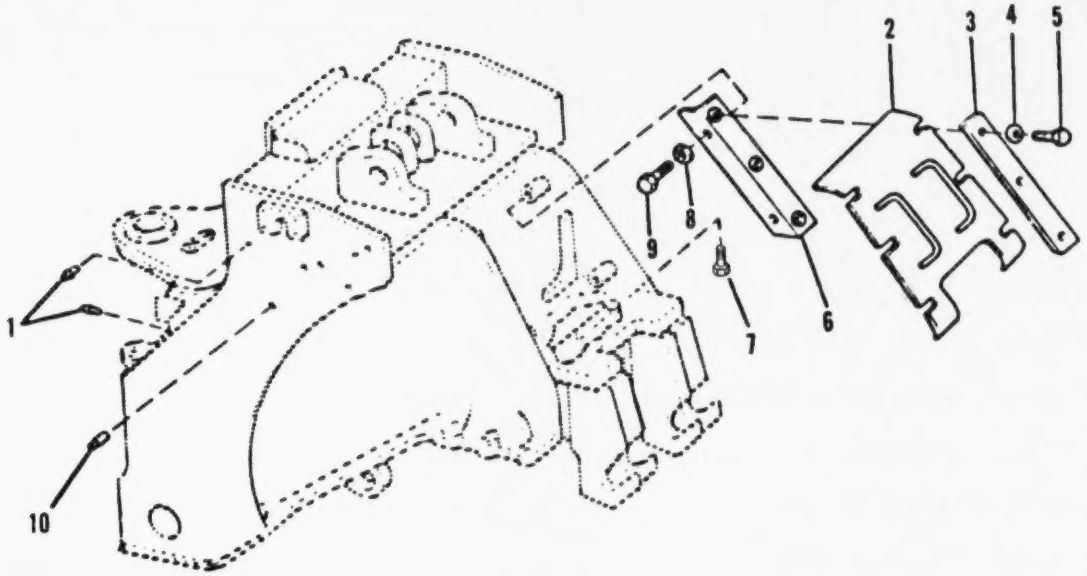

FIGURE 160. FRAME ASSEMBLY, FRONT

(1) ITEM NO	(2) SMR CODE	(3) CAGEC	(4) PART NUMBER	(5) DESCRIPTION AND USABLE ON CODES(UOC)	(6) QTY
				GROUP 1501: FRAME ASSEMBLY	
				FIG. 160 FRAME ASSEMBLY, FRONT	
1	XBHZZ	85105	101-C15-231	STUD,WELDING........................ UOC:V53	3
2	XBHZZ	11083	5R4424	SHEET ASSY........................ UOC:V53	1
3	PAHZZ	11083	4V40C2	SPACER,PLATE........................ UOC:V53	2
4	PAHZZ	11083	9M6527	WASHER,FLAT........................ UOC:V53	6
5	PAHZZ	11083	343557	BOLT,SELF-LOCKING........................ UOC:V53	6
6	PAHZZ	11083	4V3234	BRACKET,ANGLE........................ UOC:V53	2
7	PAHZZ	11083	4V3C1	SCREW,CAP,HEXAGON H........................ UOC:V53	6
8	PAHZZ	11083	5P1076	WASHER,SHOULDERED A........................ UOC:V53	4
9	PAHZZ	11083	7B3235	BOLT,MACHINE........................ UOC:V53	4
10	PAHZZ	11083	5P3479	STUD,WELDING........................ UOC:V53	12

END OF FIGURE

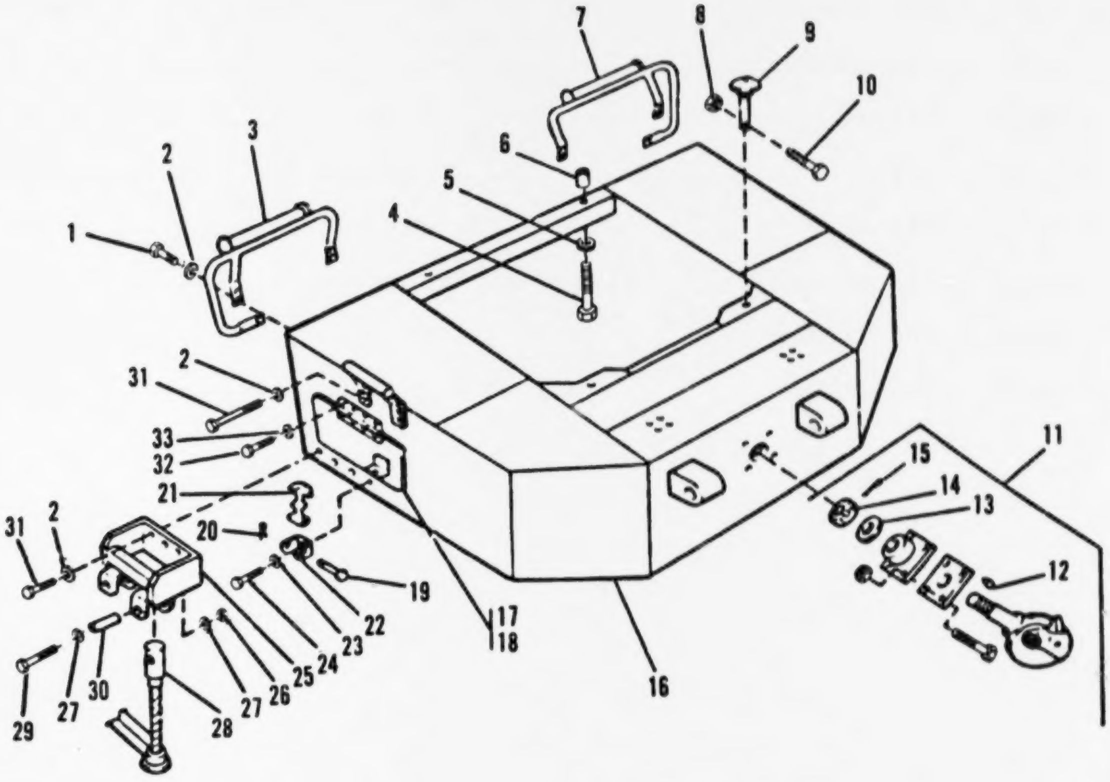

FIGURE 161. REAR BUMPER ASSEMBLY

(1) ITEM NO	(2) SMR CODE	(3) CAGEC	(4) PART NUMBER	(5) DESCRIPTION AND USABLE ON CODES(UOC)	(6) QTY
				GROUP 1501: FRAME ASSEMBLY	
				FIG. 161 REAR BUMPER ASSEMBLY	
1	PAHZZ	11083	S1587	BOLT,MACHINE............................ UOC:V53	10
2	PAHZZ	11083	5P1076	WASHER,SHOULDERED A................. UOC:V53	8
3	XBHZZ	11083	4V4546	HANDLE ASSY,GRAB LH................. UOC:V53	1
4	PAHZZ	11083	6K1330	BOLT,MACHINE............................ UOC:V53	2
5	PAHZZ	11083	9L8339	WASHER...................................... UOC:V53	2
6	PAHZZ	11083	3V7867	SPACER,SLEEVE........................... UOC:V53	2
7	XBHZZ	11083	4V4071	HANDLE ASSY,GRAB RH................. UOC:V53	1
8	PAHZZ	11083	2K4973	LOCKNUT.................................... UOC:V53	2
9	PAHZZ	11083	3V1078	PIN,GROOVED,HEADED.................. UOC:V53	2
10	PAHZZ	11083	L1143	BOLT,MACHINE............................ UOC:V53	2
11	XBHZZ	96906	MS51117-1	HOOK ASSY,PINTLE...................... UOC:V53	1
12	PAHZZ	96906	MS15001-1	.FITTING,LUBRICATION................ UOC:V53	2
13	PAHZZ	19207	7764909	.WASHER,FLAT.............................. UOC:V53	8
14	PAHZZ	24617	2C18582	.NUT,PLAIN,SLOTTED,H................. UOC:V53	1
15	XDHZZ	96906	MS24665628	PIN, COTTER................................ UOC:V53	8
16	XDHHH	11083	5R4406	BUMPER ASSY.............................. UOC:V53	1
17	XBHZZ	11083	5R4586	COVER ASSY,RH............................ UOC:V53	1
18	XBHZZ	11083	5R4587	COVER ASSY,LH............................ UOC:V53	1
19	XDHZZ	11083	2M5795	PIN,STRAIGHT,HEADED.................. UOC:V53	24
20	PAHZZ	11083	3B4607	PIN,COTTER................................. UOC:V53	2
21	PFOZZ	11083	9M3835	LATCH,HOOD................................ UOC:V53	2
22	XBHZZ	11083	9M3838	BRACKET.................................... UOC:V53	2
23	PAHZZ	11083	9M1974	WASHER,FLAT............................... UOC:V53	2
24	PAHZZ	96906	MS90728-32	BOLT,MACHINE............................ UOC:V53	2

(1) ITEM NO	(2) SMR CODE	(3) CAGEC	(4) PART NUMBER	(5) DESCRIPTION AND USABLE ON CODES(UOC)	(6) QTY
25	XBHZZ	11083	7V1558	STEP,ASSY............................ UOC:V53	2
26	PAHZZ	96906	MS51967-14	NUT,PLAIN,HEXAGON.................... UOC:V53	4
27	PAHZZ	11083	7D1649	WASHER,FLAT.......................... UOC:V53	8
28	XBHZZ	11083	7V1559	CABLE ASSY........................... UOC:V53	2
29	PAHZZ	11083	6H1717	BOLT,MACHINE......................... UOC:V53	6
30	PAHZZ	11083	5V6103	SPACER,SLEEVE........................ UOC:V53	4
31	PAHZZ	11083	6H1717	BOLT,MACHINE......................... UOC:V53	8
32	PAHZZ	96906	MS90728-5	SCREW,CAP,HEXAGON H.................. UOC:V53	8
33	PAHZZ	96906	MS-24665-628	PIN,COTTER........................... UOC:V53	8

END OF FIGURE

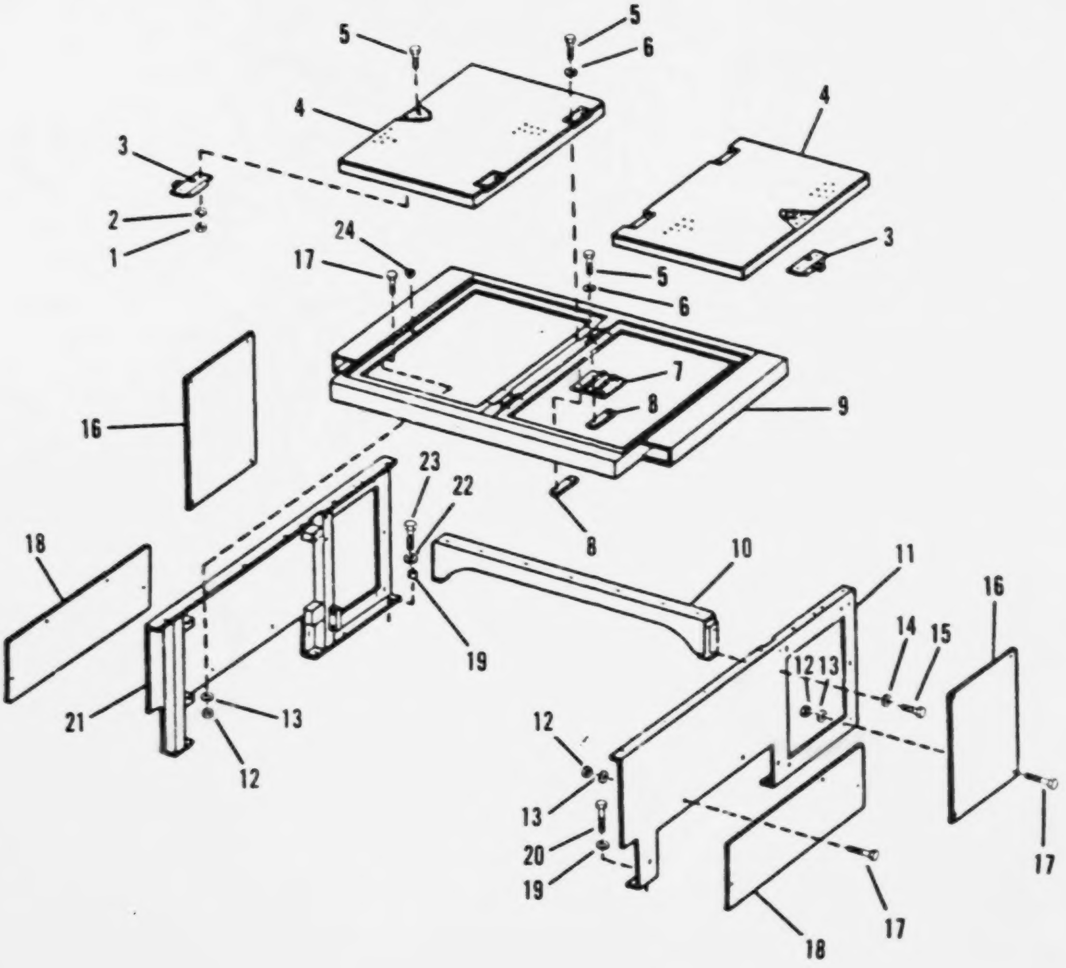

FIGURE 162. PLATFORM ASSEMBLY, CENTER

(1) ITEM NO	(2) SMR CODE	(3) CAGEC	(4) PART NUMBER	(5) DESCRIPTION AND USABLE ON CODES(UOC)	(6) QTY
				GROUP 1501: FRAME ASSEMBLY	
				FIG. 162 PLATFORM ASSEMBLY, CENTER	
1	PAFZZ	24617	426376	NUT,PLAIN,HEXAGON........................ UOC:V53	4
2	XDFZZ	83355	1-4INNVYLKWASH	WASHER,LOCK.............................. UOC:V53	4
3	XDOZZ	11083	2V2734	HANDRAIL ASSY........................ UOC:V53	1
4	XBFZZ	11083	4V4665	DOOR ASSY............................ UOC:V53	2
5	PAFZZ	96906	MS90728-5	SCREW,CAP,HEXAGON H................ UOC:V53	16
6	PAFZZ	11083	5P0537	WASHER............................... UOC:V53	12
7	XBFZZ	11083	1V5257	HINGE................................ UOC:V53	2
8	XBFZZ	11083	1V7205	CLAMP,LOOP........................... UOC:V53	6
9	XBFZZ	11083	4V5172	FRAME ASSY........................... UOC:V53	1
10	XBFZZ	11083	4V6574	CHANNEL ASSY......................... UOC:V53	1
11	XBFZZ	11083	1V5251	CHANNEL ASSY......................... UOC:V53	1
12	PAFZZ	78553	C33795-3816-4	NUT ASSEMBLY,SPRING.................. UOC:V53	24
13	PAFZZ	11083	9M6527	WASHER,FLAT.......................... UOC:V53	24
14	PAFZZ	11083	5P1076	WASHER,SHOULDERED A.................. UOC:V53	4
15	PAFZZ	11083	2B947	BOLT,MACHINE......................... UOC:V53	4
16	XBFZZ	11083	2V7417	PANEL................................ UOC:V53	2
17	PAFZZ	11083	0S1594	BOLT,MACHINE......................... UOC:V53	24
18	XBFZZ	11083	1V9750	PANEL................................ UOC:V53	2
19	PAFZZ	11083	9S9238	SPACER,SLEEVE........................ UOC:V53	8
20	PAFZZ	96906	MS90728-113	SCREW,CAP,HEXAGON H................ UOC:V53	4
21	XBFZZ	11083	1V5250	CHANNEL ASSY......................... UOC:V53	1
22	PAFZZ	11083	5P8245	WASHER,FLAT.......................... UOC:V53	4
23	PAFZZ	11083	S1587	BOLT,MACHINE......................... UOC:V53	4
24	PAFZZ	70485	711	BUMPER,NONMETALLIC................... UOC:V53	4

END OF FIGURE

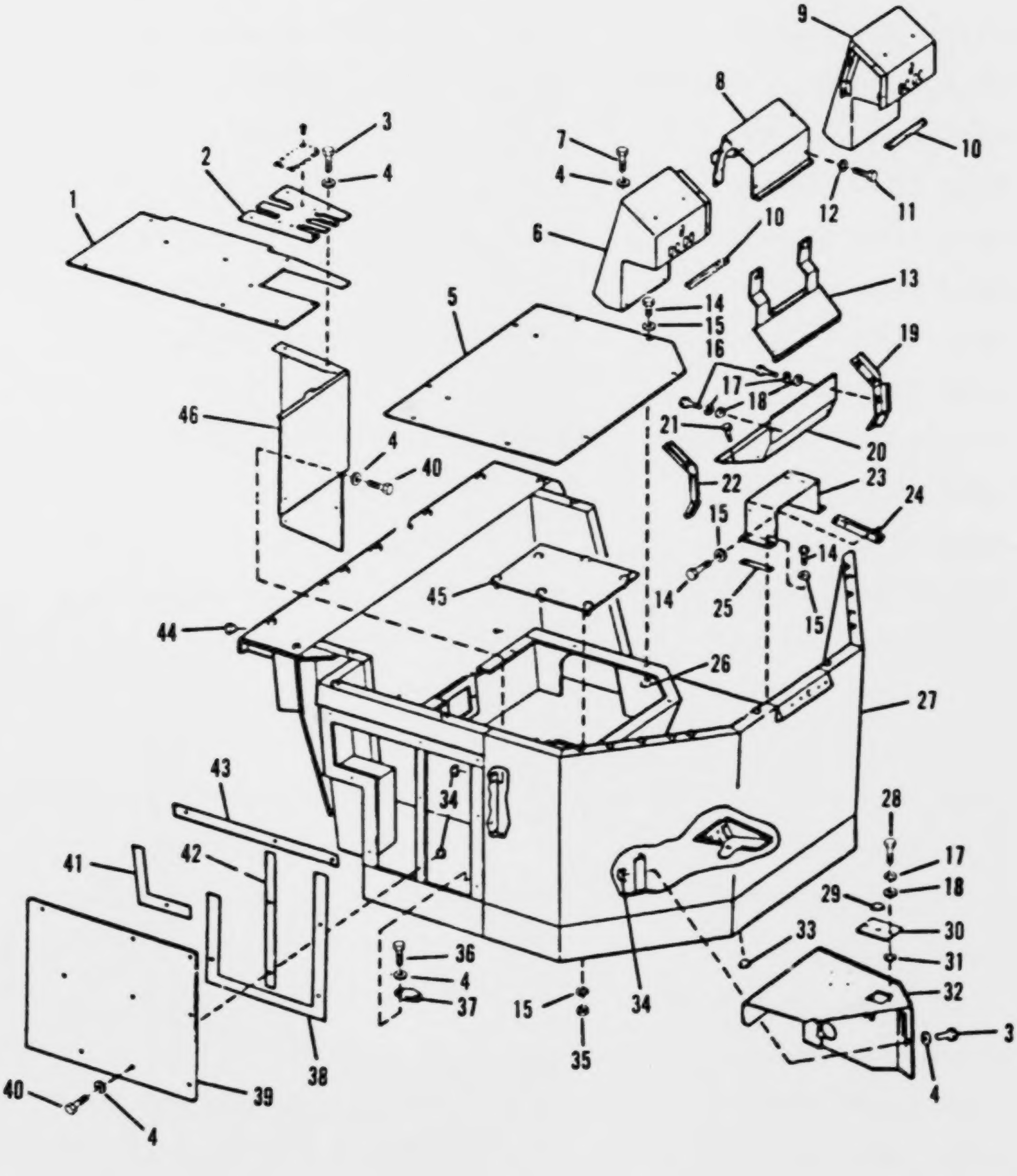

FIGURE 163. PLATFORM ASSEMBLY, CAB

(1) ITEM NO	(2) SMR CODE	(3) CAGEC	(4) PART NUMBER	(5) DESCRIPTION AND USABLE ON CODES(UOC)	(6) QTY
				GROUP 1501: FRAME ASSEMBLY	
				FIG. 163 PLATFORM ASSEMBLY, CAB	
1	XBFZZ	11083	5R4439	SHEET ASSY.......................... UOC:V53	1
2	XBFZZ	11083	5R4407	PLATE............................... UOC:V53	1
3	PAFZZ	11083	S1615	BOLT,MACHINE........................ UOC:V53	12
4	PAFZZ	78189	WD23875	WASHER,SPRING TENSI................. UOC:V53	53
5	XBFZZ	11083	4V5144	PLATE ASSY.......................... UOC:V53	1
6	XBFZZ	11083	2V3716	ADAPTER ASSY........................ UOC:V53	1
7	PAFZZ	11083	7M0320	SCREW,MACHINE....................... UOC:V53	16
8	XBFZZ	11083	2V3639	COVER ASSY.......................... UOC:V53	1
9	XBFZZ	11083	2V3715	ADAPTER ASSY........................ UOC:V53	1
10	MFFZZ	11083	5P6120	SEAL MAKE FROM SEAL P/N 5P6120..... UOC:V53	2
11	PAFZZ	11083	4S4465	SCREW,MACHINE....................... UOC:V53	8
12	PAFZZ	11083	7F9223	WASHER,LOCK......................... UOC:V53	8
13	XBFZZ	11083	2V3804	COVER ASSY.......................... UOC:V53	1
14	PAFZZ	11083	0S1594	BOLT,MACHINE........................ UOC:V53	20
15	PAFZZ	11083	5P1075	WASHER,SQUARE CONE.................. UOC:V53	12
16	PAFZZ	11083	2S9556	SCREW,MACHINE....................... UOC:V53	12
17	PAFZZ	11083	3B4502	WASHER,LOCK......................... UOC:V53	16
18	XDFZZ	11083	4B4274	WASHER,FLAT......................... UOC:V53	16
19	XBFZZ	11083	2V3799	CHANNEL ASSY........................ UOC:V53	1
20	XBFZZ	11083	2V3822	SHEET............................... UOC:V53	1
21	PAFZZ	11083	8L6521	SCREW,MACHINE....................... UOC:V53	2
22	XBFZZ	11083	2V3801	CHANNEL ASSY........................ UOC:V53	1
23	XBFZZ	11083	2V3709	BRACKET ASSY........................ UOC:V53	1
24	PAFZZ	11083	2V3708	SPACER,PLATE........................ UOC:V53	1

(1) ITEM NO	(2) SMR CODE	(3) CAGEC	(4) PART NUMBER	(5) DESCRIPTION AND USABLE ON CODES(UOC)	(6) QTY
25	XBFZZ	11083	2V3714	SHIM................................ UOC:V53	6
26	XBFZZ	23540	359-14	NUT ASSY,SPRING..................... UOC:V53	8
27	XBFZZ	11083	5R4446	PLATFORM ASSY....................... UOC:V53	1
28	PAFZZ	11083	3K6168	SCREW CAP,SOCKET HE................. UOC:V53	2
29	PAFZZ	61864	SS51142	BUTTON,PLUG......................... UOC:V53	1
30	XBFZZ	11083	2V3627	PLATE............................... UOC:V53	1
31	PAFZZ	82402	6147822	WASHER, LOCK........................ UOC:V53	2
32	XBFZZ	11083	5R4475	SHROUD ASSY......................... UOC:V53	1
33	XBFZZ	23540	412-2	PLUG,BUTTON......................... UOC:V53	1
34	PAFZZ	78553	C7956-1420-24	RETAINER,NUT AND BO................. UOC:V53	33
35	PAFZZ	11083	2K4973	LOCKNUT............................. UOC:V53	6
36	PAFZZ	96906	MS90728-5	SCREW,CAP,HEXAGON H................. UOC:V53	2
37	XBFZZ	11083	1A3382	COVER............................... UOC:V53	1
38	PAFZZ	11083	2V9383	SEAL,RUBBER SPECIAL................. UOC:V53	1
39	XBFZZ	11083	3V2047	SHEET ASSY.......................... UOC:V53	1
40	PAFZZ	96906	MS90728-7	SCREW,CAP,HEXAGON H................. UOC:V53	14
41	PAFZZ	11083	2V9381	SEAL,RUBBER ANGLE................... UOC:V53	1
42	PAFZZ	11083	2V9384	SEAL,NONMETALLIC ST................. UOC:V53	1
43	PAFZZ	11083	2V9382	SEAL,NONMETALLIC ST................. UOC:V53	1
44	PFFZZ	11083	0L1026	PLUG,EXPANSION...................... UOC:V53	2
45	XBFZZ	11083	5R4454	PLATE ASSY.......................... UOC:V53	1
46	XBFZZ	11083	5R4436	SHEET............................... UOC:V53	1

END OF FIGURE

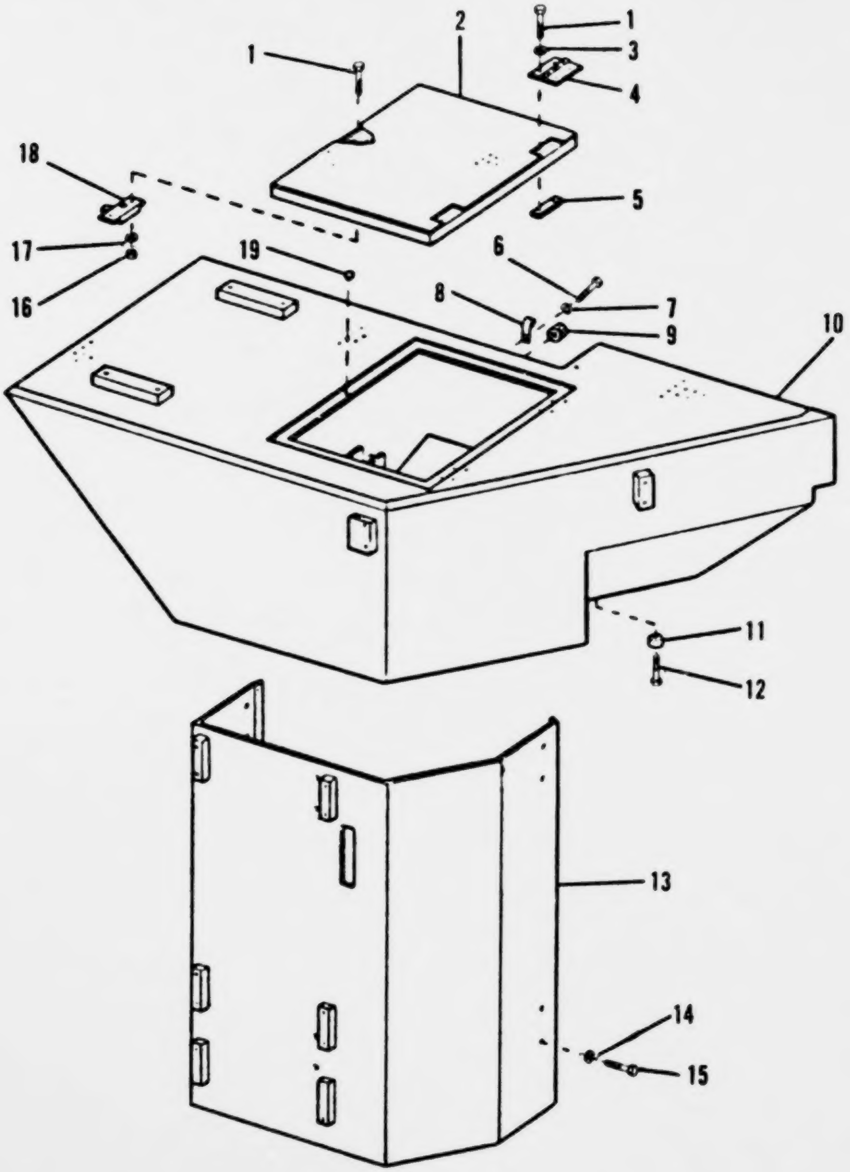

FIGURE 164. PLATFORM ASSEMBLY, SIDE

(1) ITEM NO	(2) SMR CODE	(3) CAGEC	(4) PART NUMBER	(5) DESCRIPTION AND USABLE ON CODES(UOC)	(6) QTY
				GROUP 1501: FRAME ASSEMBLY	
				FIG. 164 PLATFORM ASSEMBLY, SIDE	
1	PAFZZ	96906	MS90728-5	SCREW,CAP,HEXAGON H................ UOC:V53	2
2	XBFFF	11083	4V4666	DOOR ASSY.......................... UOC:V53	1
3	PAFZZ	96906	MS27183-10	WASHER,FLAT........................ UOC:V53	10
4	XBFZZ	11083	1V6754	HINGE,BUTT......................... UOC:V53	2
5	PFFZZ	11083	1V7205	CLAMP,LOOP......................... UOC:V53	4
6	PAFZZ	11083	4F4879	BOLT,MACHINE....................... UOC:V53	1
7	PAFZZ	96906	MS35338-45	WASHER,LOCK........................ UOC:V53	1
8	PAFZZ	11083	8M2772	CLAMP,LOOP......................... UOC:V53	1
9	PAFZZ	11083	2D2751	GROMMET,NONMETALLIC................ UOC:V53	1
10	XBFFF	11083	4V6293	PLATFORM ASSY...................... UOC:V53	1
11	PAFZZ	11083	3R6530	BUSHING,SLEEVE..................... UOC:V53	3
12	PAFZZ	11083	S1625	SCREW,CAP,HEXAGON H................ UOC:V53	3
13	XBFFF	11083	1V9494	GUARD ASSY......................... UOC:V53	1
14	XDFZZ	11083	4S9191	WASHER,FLAT........................ UOC:V53	12
15	PAFZZ	11083	T318	BOLT,MACHINE....................... UOC:V53	12
16	PAFZZ	24617	426376	NUT,PLAIN,HEXAGON.................. UOC:V53	2
17	XDFZZ	83355	1-4INNVYLKWASH	WASHER,LOCK........................ UOC:V53	2
18	XBFFF	11083	1V6755	LATCH ASSY......................... UOC:V53	1
19	PACFZ	70485	711	BUMPER,NONMETALLIC................. UOC:V53	2

END OF FIGURE

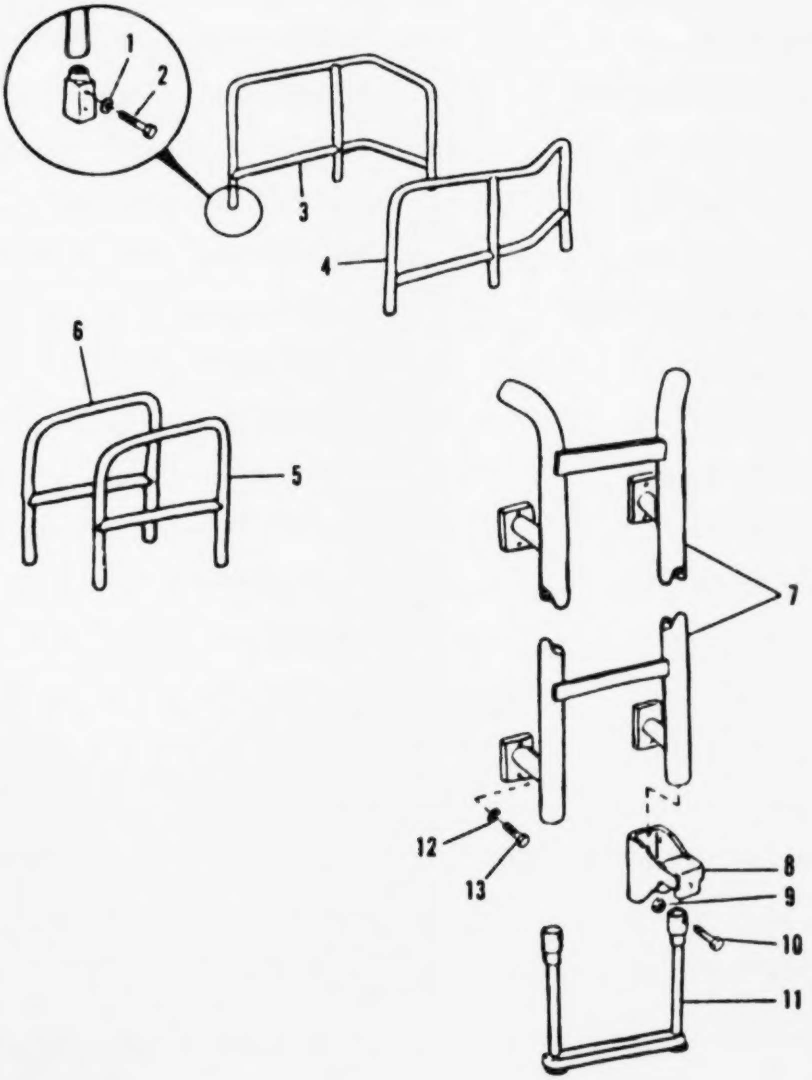

FIGURE 165. LADDER AND GUARD ASSEMBLY

(1) ITEM NO	(2) SMR CODE	(3) CAGEC	(4) PART NUMBER	(5) DESCRIPTION AND USABLE ON CODES(UOC)	(6) QTY
				GROUP 1501: FRAME ASSEMBLY	
				FIG. 165 LADDER AND GUARD ASSEMBLY	
1	PAOZZ	11083	5P1076	WASHER,SHOULDERED A................... UOC:V53	20
2	PAOZZ	11083	S1587	BOLT,MACHINE.......................... UOC:V53	20
3	XDOZZ	11083	2V2734	HANDRAIL ASSY......................... UOC:V53	1
4	XDOZZ	11083	2V2739	HANDRAIL ASSY......................... UOC:V53	1
5	XDOZZ	11083	2V2746	HANDRAIL ASSY......................... UOC:V53	1
6	XDOZZ	11083	2V2743	HANDRAIL ASSY......................... UOC:V53	1
7	XDOZZ	11083	2V7973	LADDER ASSY........................... UOC:V53	2
8	XDOZZ	11083	4V4086	BRACKET ASSY.......................... UOC:V53	4
9	PAOZZ	11083	1K6870	NUT,SELF-LOCKING,HE................... UOC:V53	4
10	PAOZZ	11083	3B2968	BOLT,MACHINE.......................... UOC:V53	2
11	XDOZZ	11083	4V4047	CABLE ASSY............................ UOC:V53	2
12	PAOZZ	11083	5P1076	WASHER,SHOULDERED A................... UOC:V53	24
13	PAOZZ	11083	0S1595	BOLT,MACHINE.......................... UOC:V53	24

END OF FIGURE

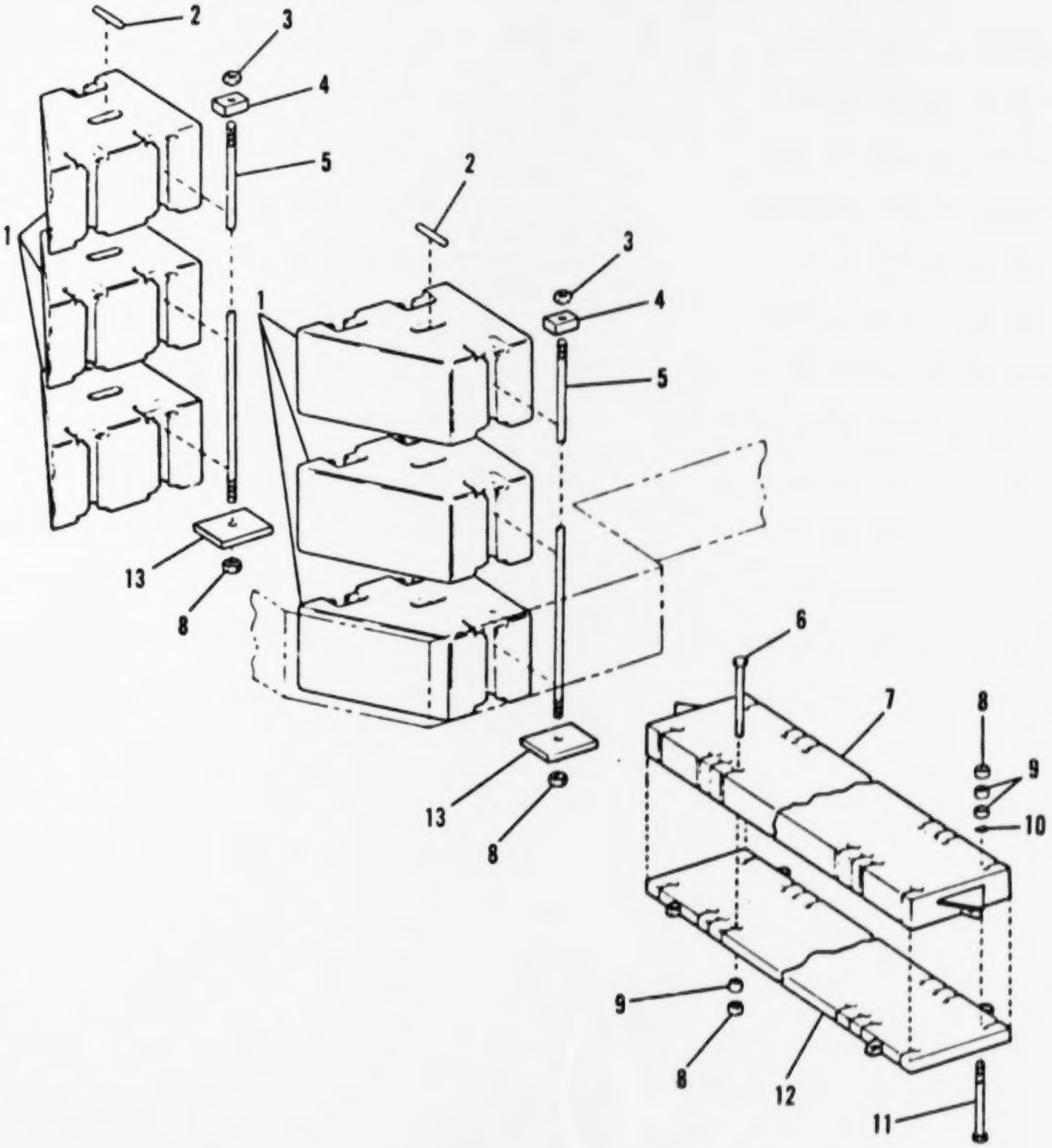

FIGURE 166. COUNTERWEIGHT ASSEMBLY

GROUP 1502: COUNTERWEIGHTS

FIG. 166 COUNTERWEIGHT ASSEMBLY

(1) ITEM NO	(2) SMR CODE	(3) CAGEC	(4) PART NUMBER	(5) DESCRIPTION AND USABLE ON CODES(UOC)	(6) QTY
1	XDFFF	11083	4V3672	COUNTERWEIGHT.......................... UOC:V53	6
2	XDFZZ	11083	1K6932	PIN,STR,HDLS.......................... UOC:V53	2
3	PAFZZ	11083	1D6306	NUT,PLAIN,HEXAGON..................... UOC:V53	6
4	XDFZZ	11083	5R4415	BAR................................... UOC:V53	6
5	XDFZZ	11083	5R3711	ROD................................... UOC:V53	6
6	PAFZZ	11083	6J4081	BOLT,MACHINE.......................... UOC:V53	4
7	XDFZZ	11083	3V3261	COUNTERWEIGHT ASSY.................... UOC:V53	1
8	PAFZZ	11083	1B4323	NUT,SPECIAL........................... UOC:V53	22
9	XDFZZ	11083	1K7627	SLEEVE................................ UOC:V53	44
10	PAFZZ	11083	8M4664	WASHER,FLAT........................... UOC:V53	4
11	PAFZZ	11083	6M2001	BOLT,MACHINE.......................... UOC:V53	12
12	XDFZZ	11083	4V7302	COUNTERWEIGHT ASSY.................... UOC:V53	1
13	XDFZZ	11083	5R4416	BLOCK................................. UOC:V53	6

END OF FIGURE

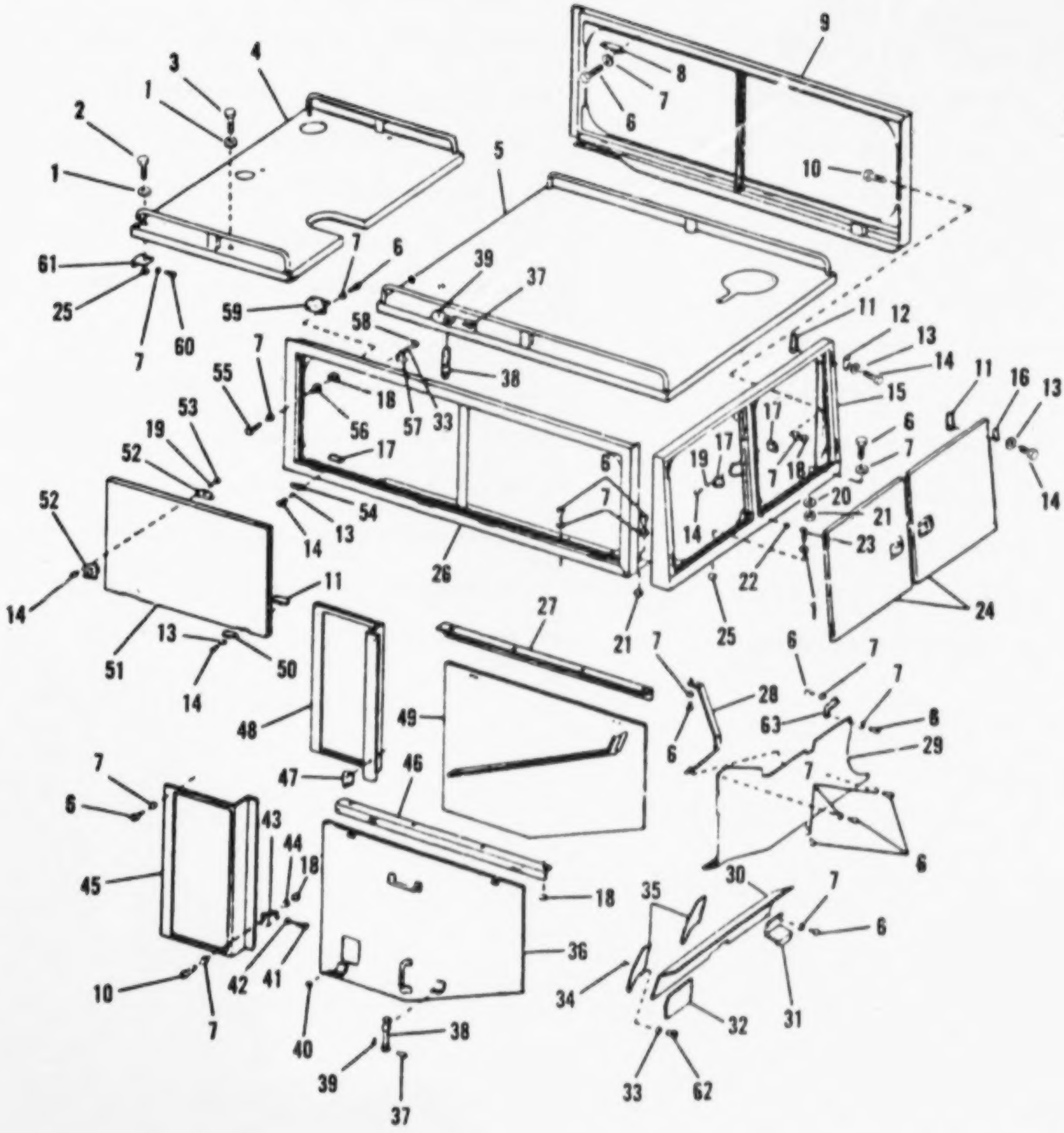

FIGURE 167. GUARD AND HOOD ASSEMBLIES

(1) ITEM NO	(2) SMR CODE	(3) CAGEC	(4) PART NUMBER	(5) DESCRIPTION AND USABLE ON CODES(UOC)	(6) QTY
				GROUP 18: BODY, CAB, HOOD AND HULL	
				GROUP 1801: BODY, CAB, HOOD AND HULL ASSEMBLIES	
				FIG. 167 GUARD AND HOOD ASSEMBLIES	
1	PAOZZ	11083	5P1076	WASHER,SHOULDERED A................ UOC:V53	8
2	PAOZZ	11083	L1329	BOLT,MACHINE........................ UOC:V53	2
3	PAOZZ	11083	1D4566	BOLT,MACHINE........................ UOC:V53	2
4	XDOZZ	11083	4V8801	PANEL ASSY.......................... UOC:V53	1
5	XDOZZ	11083	4V3710	PANEL ASSY.......................... UOC:V53	1
6	PAOZZ	11083	5D353	BOLT,SELF-LOCKING................... UOC:V53	45
7	PAOZZ	11083	9M6527	WASHER,FLAT......................... UOC:V53	79
8	XDFZZ	11083	4V3713	BRACKET ASSY........................ UOC:V53	1
9	XDFZZ	11083	1V9770	FRAME ASSY.......................... UOC:V53	1
10	PAFZZ	11083	3S3557	BOLT,SELF-LOCKING................... UOC:V53	11
11	PAFZZ	11083	1V7205	CLAMP,LOOP.......................... UOC:V53	24
12	PAFZZ	11083	4V6604	HINGE............................... UOC:V53	2
13	PAFZZ	11083	5P0537	WASHER.............................. UOC:V53	44
14	PAFZZ	96906	MS90728-5	SCREW,CAP,HEXAGON H................. UOC:V53	60
15	XDFZZ	11083	1V9773	FRAME ASSY.......................... UOC:V53	1
16	PAFZZ	11083	4V6605	LEAF,BUTT HINGE..................... UOC:V53	2
17	XDFZZ	11083	2V9292	PLATE,STRIKER....................... UOC:V53	2
18	PAFZZ	15564	1377A	NUT,PLAIN,HEXAGON................... UOC:V53	6
19	PAFZZ	41226	4347	WASHER,LOCK......................... UOC:V53	12
20	PAFZZ	11083	7H1642	WASHER,FLAT......................... UOC:V53	2
21	PAFZZ	78553	C33755-3816-4	NUT ASSEMBLY,SPRING................. UOC:V53	6
22	XBFZZ	70485	711	BUMPER,NONMETALLIC.................. UOC:V53	12
23	PAFZZ	11083	0S1595	BOLT,MACHINE........................	4

(1) ITEM NO	(2) SMR CODE	(3) CAGEC	(4) PART NUMBER	(5) DESCRIPTION AND USABLE ON CODES(UOC)	(6) QTY
				UOC:V53	
24	XDFZZ	11083	1V9772	DOOR ASSY UOC:V53	2
25	PAFZZ	78553	C33746-1213-4	NUT,RETAINER UOC:V53	9
26	XDFZZ	11083	1V9771	FRAME ASSY UOC:V53	1
27	XDFZZ	11083	4V4084	ANGLE ASSY UOC:V53	1
28	XDFZZ	11083	5V3845	PLATE ASSY UOC:V53	1
29	XDFZZ	11083	5V3839	SHIELD UOC:V53	1
30	XDFZZ	11083	3V8092	SHIELD ASSY UOC:V53	1
31	XDFZZ	11083	3V8091	PLATE UOC:V53	1
32	XDFZZ	11083	3V8142	PLATE UOC:V53	1
33	PAFZZ	11083	5M2894	WASHER,FLAT UOC:V53	11
34	PAFZZ	11083	6B933	SPACER,SLEEVE UOC:V53	1
35	XDFZZ	11083	3V0581	BRACKET ASSY UOC:V53	2
36	XDFZZ	11083	5R4472	PANEL ASSY UOC:V53	1
37	XDOZZ	11083	2M5755	PIN,STRAIGHT,HEADED UOC:V53	9
38	PBOZZ	11083	9M3835	LATCH,HOOD UOC:V53	9
39	PAOZZ	11083	3B4607	PIN,COTTER UOC:V53	9
40	PAFZZ	70485	1R693	BUMPER,NONMETALLIC UOC:V53	15
41	PAFZZ	11083	308538	BOLT,SELF-LOCKING UOC:V53	2
42	PAFZZ	11083	7D1649	WASHER,FLAT UOC:V53	2
43	XDFZZ	11083	5V6447	ANGLE RH UOC:V53	1
44	PAFZZ	11083	6N8863	WASHER,FLAT UOC:V53	1
45	XDFZZ	11083	2V7511	PANEL,RH UOC:V53	1
46	XDFZZ	11083	4V4085	ANGLE,ASSY UOC:V53	1
47	XDFZZ	11083	5V6446	ANGLE LH UOC:V53	1
48	XDFZZ	11083	2V7512	PANEL LH UOC:V53	1
49	XDFZZ	11083	4V4459	PANEL ASSY	1

(1) ITEM NO	(2) SMR CODE	(3) CAGEC	(4) PART NUMBER	(5) DESCRIPTION AND USABLE ON CODES(UOC)	(6) QTY
				UOC:V53	
50	PAFZZ	11083	4V66C8	LEAF,BUTT HINGE....................	10
				UOC:V53	
51	XDFZZ	11083	1V9465	DOOR................................	4
				UOC:V53	
52	PAOFF	11083	1V6755	LATCH ASSY..........................	4
				UOC:V53	
53	PAFZZ	24617	426376	NUT,PLAIN,HEXAGON...................	17
				UOC:V53	
54	PAFZZ	11083	4V66C7	LEAF,BUTT HINGE.....................	10
				UOC:V53	
55	PAFZZ	11083	2A4639	BOLT,MACHINE........................	9
				UOC:V53	
56	PAFZZ	11083	4V72C8	SPACER,SLEEVE.......................	6
				UOC:V53	
57	PBFZZ	11083	2S21C9	BRACKET,ANGLE.......................	5
				UOC:V53	
58	PAFZZ	11083	5K91C7	BOLT,SELF-LOCKING...................	10
				UOC:V53	
59	XDFZZ	11083	4V3714	BRACKET ASSY........................	1
				UOC:V53	
60	PAFZZ	11083	1A2C29	BOLT,MACHINE........................	4
				UOC:V53	
61	XDFZZ	11083	2V7730	ANGLE...............................	2
				UOC:V53	
62	PAFZZ	11083	0S1591	SCREW...............................	1
				UOC:V53	
63	XDFZZ	11083	2V9675	CLIP ASSY...........................	1
				UOC:V53	

END OF FIGURE

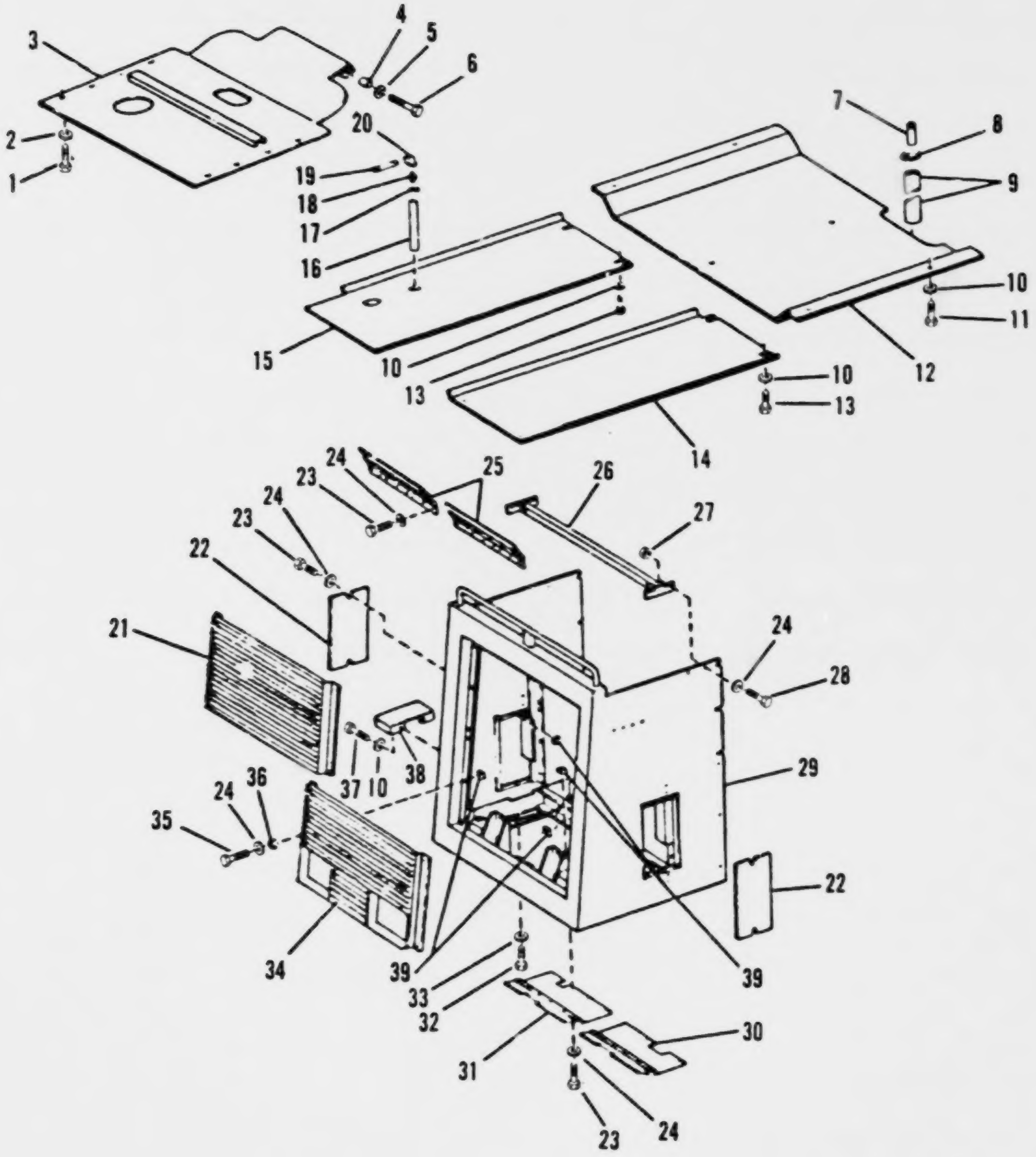

FIGURE 168. GUARD ASSEMBLIES

(1) ITEM NO	(2) SMR CODE	(3) CAGEC	(4) PART NUMBER	(5) DESCRIPTION AND USABLE ON CODES(UOC)	(6) QTY
				GROUP 1801: BODY, CAB, HOOD, AND HULL ASSEMBLIES	
				FIG. 168 GUARD ASSEMBLIES	
1	PAHZZ	11083	319253	BOLT,SELF-LOCKING.................. UOC:V53	8
2	PAHZZ	11083	5P6652	WASHER,FLAT........................ UOC:V53	8
3	XBHZZ	11083	3V2197	GUARD ASSY......................... UOC:V53	1
4	PAHZZ	11083	5B9175	SPACER,SLEEVE...................... UOC:V53	2
5	PAHZZ	11083	5P8248	WASHER,FLAT........................ UOC:V53	2
6	PAHZZ	11083	1D4608	BOLT,MACHINE....................... UOC:V53	2
7	PFHZZ	11083	6B0689	PLUG,PIPE.......................... UOC:V53	1
8	XDHZZ	02280	805287	CLAMP,HOSE......................... UOC:V53	1
9	XBHZZ	11083	3K6660	HOSE,RUBBER........................ UOC:V53	1
10	PAHZZ	11083	5P1076	WASHER,SHOULDERED A................ UOC:V53	14
11	PAHZZ	11083	308538	BOLT,SELF-LOCKING.................. UOC:V53	4
12	XBHZZ	11083	2V9268	GUARD.............................. UOC:V53	1
13	PAHZZ	11083	0S1595	BOLT,MACHINE....................... UOC:V53	8
14	XBHZZ	11083	2V7152	GUARD.............................. UOC:V53	1
15	XBHZZ	11083	2V7534	GUARD.............................. UOC:V53	1
16	XBHZZ	11083	5P0765	HOSE,RUBBER........................ UOC:V53	1
17	PBHZZ	10988	214-256	CLAMP,HOSE......................... UOC:V53	1
18	PBHZZ	30327	KF12-08PS	ADAPTER,STRAIGHT,PI................ UOC:V53	1
19	XBHZZ	11083	3B7271	NIPPLE,PIPE........................ UOC:V53	1
20	PBHZZ	11083	3B6496	ELBOW,PIPE......................... UOC:V53	1
21	XBHZZ	11083	2V6708	GRILL ASSY......................... UOC:V53	1
22	XBHZZ	11083	2V7729	PANEL.............................. UOC:V53	2
23	PAHZZ	11083	0S1594	BOLT,MACHINE....................... UOC:V53	19
24	PAHZZ	11083	9M6527	WASHER,FLAT........................	39

(1) ITEM NO	(2) SMR CODE	(3) CAGEC	(4) PART NUMBER	(5) DESCRIPTION AND USABLE ON CODES(UOC)	(6) QTY
				UOC:V53	
25	XBHZZ	11083	2V7595	BAFFLE ASSY.......................... UOC:V53	2
26	XBHZZ	11083	5V6019	ANGLE ASSY.......................... UOC:V53	1
27	PAHZZ	15564	1377A	NUT,PLAIN,HEXAGON.................. UOC:V53	4
28	PAHZZ	11083	0S1591	SCREW.............................. UOC:V53	4
29	XBHZZ	11083	7V0657	GUARD ASSY.......................... UOC:V53	1
30	XBHZZ	11083	2V7371	BAFFLE ASSY.......................... UOC:V53	1
31	XBHZZ	11083	2V7372	BAFFLE ASSY.......................... UOC:V53	1
32	PAHZZ	11083	2A1538	BOLT,MACHINE....................... UOC:V53	6
33	PAHZZ	96906	MS35338-51	WASHER,LOCK........................ UOC:V53	6
34	XBHZZ	11083	2V6709	GRILL ASSY.......................... UOC:V53	1
35	PAHZZ	11083	0S1571	BOLT................................ UOC:V53	12
36	PAHZZ	11083	6B7469	SPACER.............................. UOC:V53	12
37	PAHZZ	11083	S1587	BOLT,MACHINE........................ UOC:V53	2
38	XBHZZ	11083	3V3787	STEP ASSY........................... UOC:V53	1
39	PAHZZ	78553	C33795-3816-4	NUT ASSEMBLY,SPRING................ UOC:V53	43

END OF FIGURE

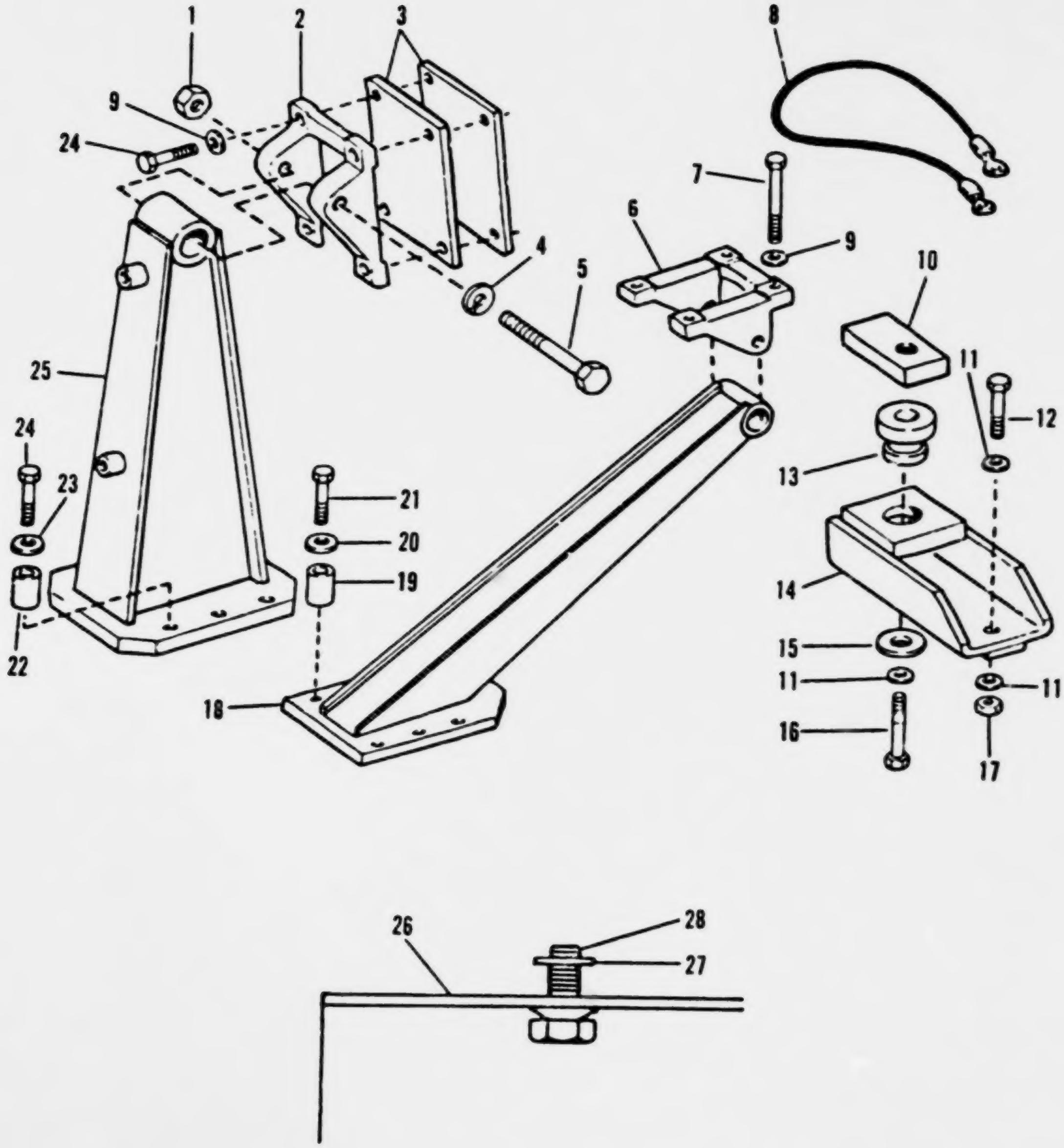

FIGURE 169. PLATFORM SUPPORT ASSEMBLY

GROUP 1801: BODY, CAB, HOOD, AND HULL ASSEMBLIES

FIG. 169 PLATFORM SUPPORT ASSEMBLY

(1) ITEM NO	(2) SMR CODE	(3) CAGEC	(4) PART NUMBER	(5) DESCRIPTION AND USABLE ON CODES(UOC)	(6) QTY
1	PAFZZ	11083	2H3786	NUT UOC:V53	4
2	XDFZZ	11083	4V9796	BRACKET UOC:V53	2
3	XDFZZ	11083	2V6715	PLATE UOC:V53	2
4	PAFZZ	96906	MS35338-53	WASHER,LOCK UOC:V53	4
5	PAFZZ	11083	7B8364	BOLT,MACHINE UOC:V53	4
6	XDFZZ	11083	4V9795	BRACKET UOC:V53	2
7	PAFZZ	11083	2A1531	BOLT,MACHINE UOC:V53	8
8	PAFZZ	11083	3R2371	WIRE ASSEMBLY,ELECT UOC:V53	1
9	PAFZZ	11083	5P8245	WASHER,FLAT UOC:V53	9
10	XDFZZ	11083	8B7101	LUG UOC:V53	2
11	PAFZZ	11083	5P8247	WASHER,FLAT UOC:V53	10
12	PAFZZ	11083	1B4367	BOLT,MACHINE UOC:V53	4
13	PFFZZ	76005	J-6210-4	MOUNT,RESILIENT UOC:V53	2
14	XDFZZ	11083	1V9093	BRACKET ASSY UOC:V53	2
15	PAFZZ	11083	2P3696	RETAINER UOC:V53	2
16	PAFZZ	11083	1D4588	SCREW UOC:V53	2
17	PAFZZ	27315	2045V007	NUT,PLAIN,HEXAGON UOC:V53	4
18	XDFFH	11083	3V5851	SUPPORT ASSY UOC:V53	2
19	PAFZZ	11083	6K9800	SPACER,SLEEVE UOC:V53	12
20	PAFZZ	11083	4D3704	WASHER,FLAT UOC:V53	12
21	PAFZZ	11083	1A8537	BOLT,MACHINE UOC:V53	12
22	PAFZZ	11083	9F8885	SPACER,SLEEVE UOC:V53	12
23	PAFZZ	19207	6299613	WASHER,FLAT UOC:V53	12
24	PAFZZ	11083	9S1366	BOLT,MACHINE	20

(1) ITEM NO	(2) SMR CODE	(3) CAGEC	(4) PART NUMBER	(5) DESCRIPTION AND USABLE ON CODES(UOC)	(6) QTY
				UOC:V53	
25	XDFHH	11083	3V5850	SUPPORT ASSY........................	2
				UOC:V53	
26	XDFZZ	11083	2V9874	PANEL.................................	1
				UOC:V53	
27	PAFZZ	11083	5M2894	WASHER,FLAT........................	4
				UOC:V53	
28	PAFZZ	11083	0L1351	BOLT,MACHINE.......................	4
				UOC:V53	

END OF FIGURE

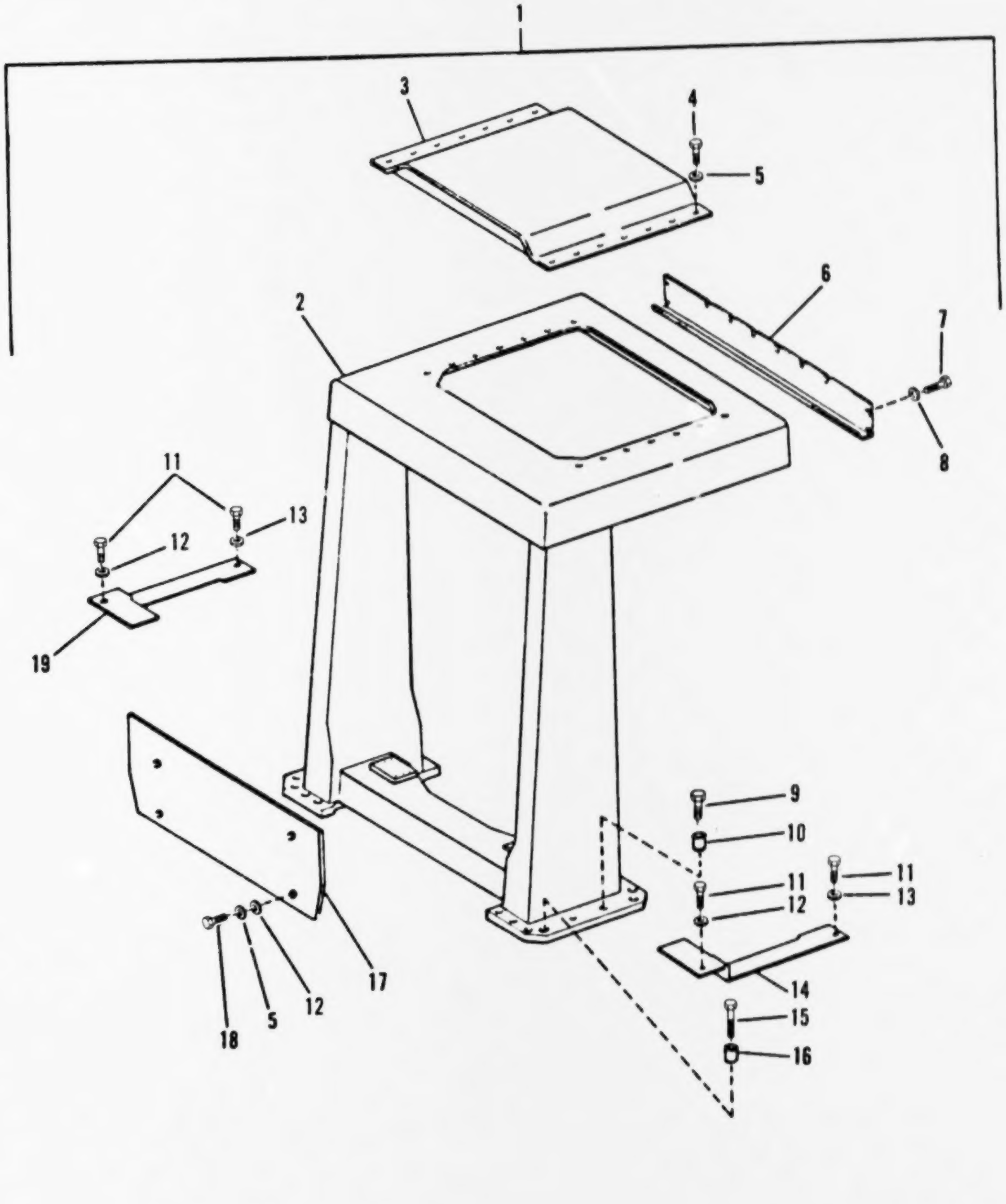

FIGURE 170. ROLLOVER PROTECTION STRUCTURE (ROPS)

(1) ITEM NO	(2) SMR CODE	(3) CAGEC	(4) PART NUMBER	(5) DESCRIPTION AND USABLE ON CODES(UOC)	(6) QTY
				GROUP 18C1: BODY, CAB, HOOD, AND HULL ASSEMBLIES	
				FIG. 170 ROLLOVER PROTECTION STRUCTURE (ROPS)	
1	XDFHH	11083	1V4901	ROLLOVER GRP,PROT.................... UOC:V53	1
2	XDFZZ	11083	1V7206	.CANOPY ASSY......................... UOC:V53	1
3	XDFZZ	11083	1V7746	.COVER ASSY.......................... UOC:V53	1
4	PAFZZ	11083	0L1351	.BOLT,MACHINE........................ UOC:V53	14
5	PAFZZ	11083	5P1075	.WASHER,SQUARE CONE.................. UOC:V53	18
6	XDFZZ	11083	2V2014	.COVER............................... UOC:V53	1
7	PAFZZ	11083	S1615	.BOLT,MACHINE........................ UOC:V53	10
8	PAFZZ	78189	WD23875	.WASHER,SPRING TENSI................. UOC:V53	10
9	PAFZZ	11083	6J1551	.SCREW,CAP,HEXAGON H................. UOC:V53	16
10	PAFZZ	11083	1V7749	.SPACER,SLEEVE....................... UOC:V53	16
11	PAFZZ	11083	6H1717	.BOLT,MACHINE........................ UOC:V53	4
12	PAFZZ	11083	2S1654	.WASHER,FLAT......................... UOC:V53	6
13	PAFZZ	11083	5P8245	.WASHER,FLAT......................... UOC:V53	2
14	XDFZZ	11083	1V9491	.COVER,RH............................ UOC:V53	1
15	PAFZZ	11083	1D4642	.BOLT,SPECIAL........................ UOC:V53	4
16	PAFZZ	11083	1V7750	.SPACER,SLEEVE....................... UOC:V53	4
17	XDFZZ	11083	2V9350	.SHEET ASSY.......................... UOC:V53	1
18	PAFZZ	11083	L2070	.BOLT,MACHINE........................ UOC:V53	4
19	XDFZZ	11083	1V9492	.COVER,LH............................ UOC:V53	1

END OF FIGURE

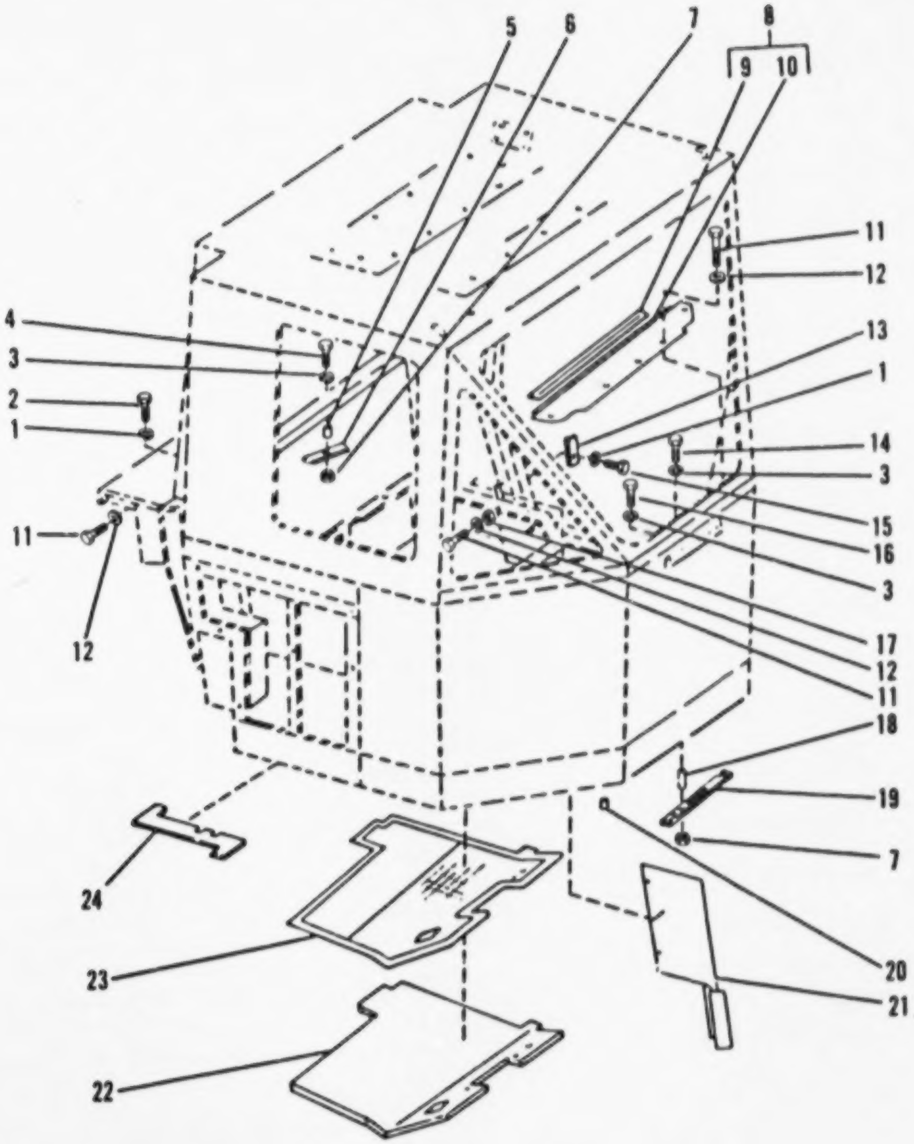

FIGURE 171. CAB

(1) ITEM NO	(2) SMR CODE	(3) CAGEC	(4) PART NUMBER	(5) DESCRIPTION AND USABLE ON CODES(UOC)	(6) QTY
				GROUP 1801: BODY, CAB, HOOD, AND HULL ASSEMBLIES	
				FIG. 171 CAB	
1	PAFZZ	96906	MS35338-45	WASHER,LOCK UOC:V53	5
2	PAFZZ	11083	S1594	BOLT UOC:V53	3
3	PAFZZ	96906	MS35338-48	WASHER,LOCK UOC:V53	11
4	PAFZZ	11083	L1329	BOLT,MACHINE UOC:V53	1
5	PAFZZ	11083	1V7753	SPACER,SLEEVE UOC:V53	1
6	XBFZZ	11083	2V3849	SEAL UOC:V53	1
7	PAFZZ	12603	6108	NUT,PLAIN,HEXAGON UOC:V53	1
8	XDFFF	11083	2V4044	SHEET ASSY UOC:V53	1
9	XDFZZ	11083	5P5902	.NONMETALLIC SPECIAL UOC:V53	1
10	XDFZZ	11083	2V4043	.SHEET UOC:V53	1
11	PAFZZ	96906	MS90728-8	SCREW,CAP,HEXAGON H UOC:V53	3
12	PAFZZ	78189	WD23875	WASHER,SPRING TENSI UOC:V53	8
13	XDFZZ	11083	2V3850	SEAL UOC:V53	1
14	PAFZZ	11083	S1615	BOLT,MACHINE UOC:V53	8
15	PAFZZ	11083	0S1571	BOLT UOC:V53	2
16	PAFZZ	11083	7B3235	BOLT,MACHINE UOC:V53	1
17	PAFZZ	78553	C7956-1420-24	RETAINER,NUT AND BO UOC:V53	1
18	PAFZZ	11083	1V7801	SPACER,SLEEVE UOC:V53	1
19	XDFZZ	11083	2V3758	SEAL UOC:V53	1
20	XDFZZ	11083	5H4744	SPACER,SLEEVE UOC:V53	1
21	XDFZZ	11083	2V5095	COVER ASSY UOC:V53	1
22	XDFZZ	11083	4V3317	INSULATION UOC:V53	1
23	XDFZZ	11083	4V3318	FLOORMAT UOC:V53	1
24	XDFZZ	11083	2V3851	SEAL	1

(1) ITEM NO	(2) SMR CODE	(3) CAGEC	(4) PART NUMBER	(5) DESCRIPTION AND USABLE ON CODES(UOC)	(6) QTY
				UOC:V53	

END OF FIGURE

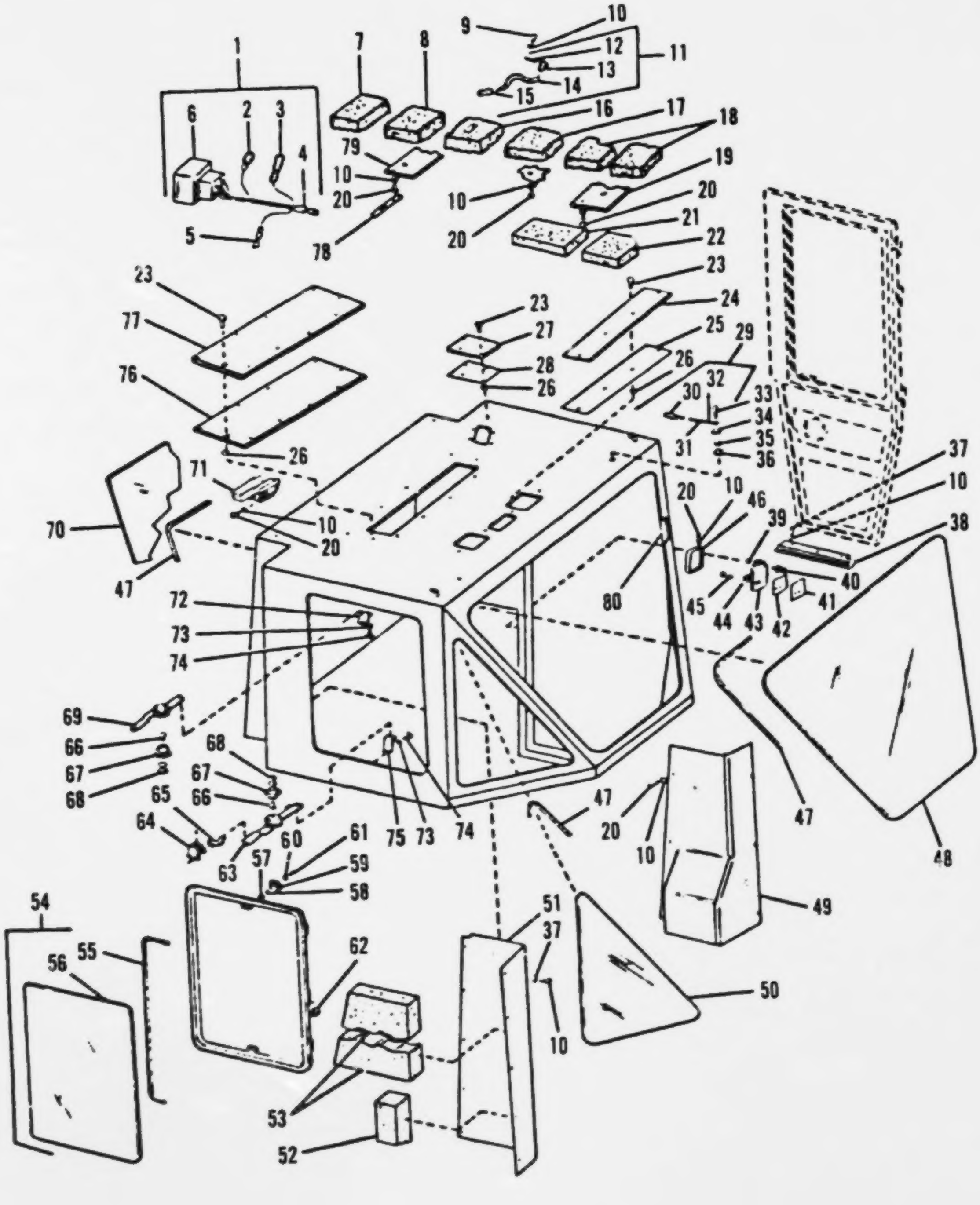

FIGURE 172. CAB ASSEMBLY

(1) ITEM NO	(2) SMR CODE	(3) CAGEC	(4) PART NUMBER	(5) DESCRIPTION AND USABLE ON CODES(UOC)	(6) QTY
				GROUP 1801: BODY, CAB, HOOD, AND HULL ASSEMBLIES	
				FIG. 172 CAB ASSEMBLY	
1	XDFFF	11083	3V4163	HARNESS ASSY........................ UOC:V53	1
2	PAFZZ	79550	11856	.TERMINAL,QUICK DISC................ UOC:V53	1
3	PAFZZ	79550	17510	.CONNECTOR,PLUG,ELEC................ UOC:V53	1
4	PAFZZ	11083	5P1477	.TERMINAL,LUG....................... UOC:V53	1
5	PAFZZ	96906	MS25036-108	.TERMINAL,LUG....................... UOC:V53	1
6	XAFZZ	11083	8K8836	.CONNECTOR,PLUG,ELEC................ UOC:V53	1
7	XDFZZ	70281	1016468	INSULATION.......................... UOC:V53	1
8	XDFZZ	70281	1016489	INSULATION.......................... UOC:V53	1
9	PAFZZ	11083	2N3478	SCREW,MACHINE....................... UOC:V53	1
10	PAFZZ	96906	MS35335-32	WASHER, LOCK........................ UOC:V53	57
11	XDFZF	11083	360594	WIRE ASSY........................... UOC:V53	1
12	PAFZZ	96906	MS25036-108	.TERMINAL,LUG....................... UOC:V53	1
13	PAFZZ	59730	8251G	.TERMINAL,QUICK DISC................ UOC:V53	1
14	XDFZZ	11083	335786	.WIRE,BULK,16 GA.................... UOC:V53	1
15	XAFZZ	79497	C-636	.PROTECTOR,WIRE TERM................ UOC:V53	1
16	XDFZZ	70281	1016469	INSULATION.......................... UOC:V53	1
17	XDFZZ	70281	1016488	INSULATION.......................... UOC:V53	1
18	XDFZZ	70281	1016460	INSULATION.......................... UOC:V53	1
19	XDFZZ	70281	1016487	COVER............................... UOC:V53	1
20	XDFZZ	21340	590030	SCREW,MACHINE....................... UOC:V53	30
21	XDFZZ	70281	1016462	INSULATION.......................... UOC:V53	1
22	XDFZZ	70281	1017643	INSULATION.......................... UOC:V53	1
23	PAFZZ	11083	0S1594	BOLT,MACHINE........................ UOC:V53	6
24	XDFZZ	70281	1017559	COVER ASSY..........................	1

(1) ITEM NO	(2) SMR CODE	(3) CAGEC	(4) PART NUMBER	(5) DESCRIPTION AND USABLE ON CODES(UOC)	(6) QTY
				UOC:V53	
25	XDFZZ	70281	1016491	GASKET UOC:V53	1
26	PAFZZ	15564	1377A	NUT,PLAIN,HEXAGON UOC:V53	18
27	XDFZZ	11083	3V3083	COVER UOC:V53	1
28	XDFZZ	11083	3V3078	GASKET UOC:V53	1
29	XDFFF	11083	3V4164	WIRE ASSY UOC:V53	1
30	PAFZZ	79550	17510	.CONNECTOR,PLUG,ELEC UOC:V53	1
31	PFOZZ	81349	M22759/11-16-0	.WIRE,ELECTRICAL UOC:V53	1
32	PAFZZ	96906	MS25036-108	.TERMINAL,LUG UOC:V53	1
33	PAFZZ	11083	4B1239	SCREW,MACHINE UOC:V53	1
34	XDFZZ	11083	4V4164	BUSHING,INSULATED UOC:V53	1
35	PFOZZ	13499	310-0742-010	WASHER,LOCK UOC:V53	1
36	PAFZZ	11083	4B2048	NUT,PLAIN,HEXAGON UOC:V53	1
37	XDFZZ	11083	5P7111	SCREW,TAPPING,THREA UOC:V53	16
38	XDFZZ	70281	1016747	COVER UOC:V53	1
39	PAFZZ	11083	1D4718	NUT UOC:V53	1
40	XDFZZ	70523	AVM3167C	STRIKER ASSY UOC:V53	1
41	XDFZZ	70281	1015819	SHIM UOC:V53	2
42	XDFZZ	70281	1015821	SHIM UOC:V53	2
43	XDFZZ	70281	1015807	PLATE ASSY UOC:V53	1
44	XDFZZ	11083	4V9640	STRIP UOC:V53	1
45	PAFZZ	96906	MS90728-113	SCREW,CAP,HEXAGON H UOC:V53	2
46	XDFZZ	70281	1015822	COVER UOC:V53	1
47	MFFZZ	77551	294143	SEAL,PREFMD MAKE FROM SEAL, SPECIAL P/N 294143 UOC:V53	1
48	XDFZZ	70281	1005L008	GLASS,WSHLD UOC:V53	1
49	XDFZZ	70281	1016507	COVER UOC:V53	1

(1) ITEM NO	(2) SMR CODE	(3) CAGEC	(4) PART NUMBER	(5) DESCRIPTION AND USABLE ON CODES(UOC)	(6) QTY
50	XDFZZ	70281	1026L003	GLASS................................ UOC:V53	2
51	XDFZZ	70281	1016785	COVER................................ UOC:V53	1
52	XDFZZ	70281	1016463	INSULATION........................... UOC:V53	1
53	XDFZZ	70281	1016464	INSULATION........................... UOC:V53	1
54	XDFFF	70281	1015823	WINDOW GRP,BASIC..................... UOC:V53	1
55	PAFZZ	11083	5P5768	.SEAL, PREFORMED MAKE FROM SEAL, SPECIAL P/N 5P5768................. UOC:V53	2
56	XDFZZ	70281	1000L066	.GLASS............................... UOC:V53	1
57	PAFZZ	23040	33797S36	NUT,PLAIN,HEXAGON.................... UOC:V53	4
58	PAFZZ	11083	4B4277	WASHER............................... UOC:V53	8
59	XDFZZ	11083	4V6570	BRACKET.............................. UOC:V53	2
60	PAFZZ	11083	4B4277	WASHER,FLAT.......................... UOC:V53	8
61	PAFZZ	96906	MS90728-32	BOLT,MACHINE......................... UOC:V53	4
62	PAFZZ	11083	2K4973	LOCKNUT.............................. UOC:V53	2
63	XDFZZ	11083	6P6566	ARM ASSY............................. UOC:V53	1
64	XDFZZ	11083	4V6569	BRACKET.............................. UOC:V53	2
65	XDFZZ	11083	5V5294	STRIP................................ UOC:V53	2
66	XDFZZ	76871	FH3320	LEG,LEVELING......................... UOC:V53	4
67	PAFZZ	11083	5M2894	WASHER,FLAT.......................... UOC:V53	4
68	PAFZZ	11083	4J8265	NUT,SPECIAL.......................... UOC:V53	4
69	XDFZZ	11083	6P6567	ARM ASSY............................. UOC:V53	1
70	XDFZZ	11083	5V8962	GLASS................................ UOC:V53	1
71	XDFZZ	70281	1016646	COVER,ASSY........................... UOC:V53	1
72	XDFZZ	11083	4V6571	BRACKET.............................. UOC:V53	1
73	PAFZZ	96906	MS35338-45	WASHER,LOCK.......................... UOC:V53	4
74	PAFZZ	11083	0S1594	BOLT,MACHINE......................... UOC:V53	2
75	XDFZZ	70281	1015817	BRACKET,LOWER........................	1

(1) ITEM NO	(2) SMR CODE	(3) CAGEC	(4) PART NUMBER	(5) DESCRIPTION AND USABLE ON CODES(UOC)	(6) QTY
				UOC:V53	
76	XDFZZ	70281	1016490	GASKET.............................. UOC:V53	1
77	XDFZZ	70281	1017557	COVER ASSY.......................... UOC:V53	1
78	PAFZZ	77969	486	NONMETALLIC CHANNEL................. UOC:V53	1
79	XDFZZ	70281	1016486	COVER............................... UOC:V53	1
80	MFFZZ	11083	5P7139	SEAL,PREFMD,BULK MAKE FROM SEAL P/N 5P7139.......................... UOC:V53	1

END OF FIGURE

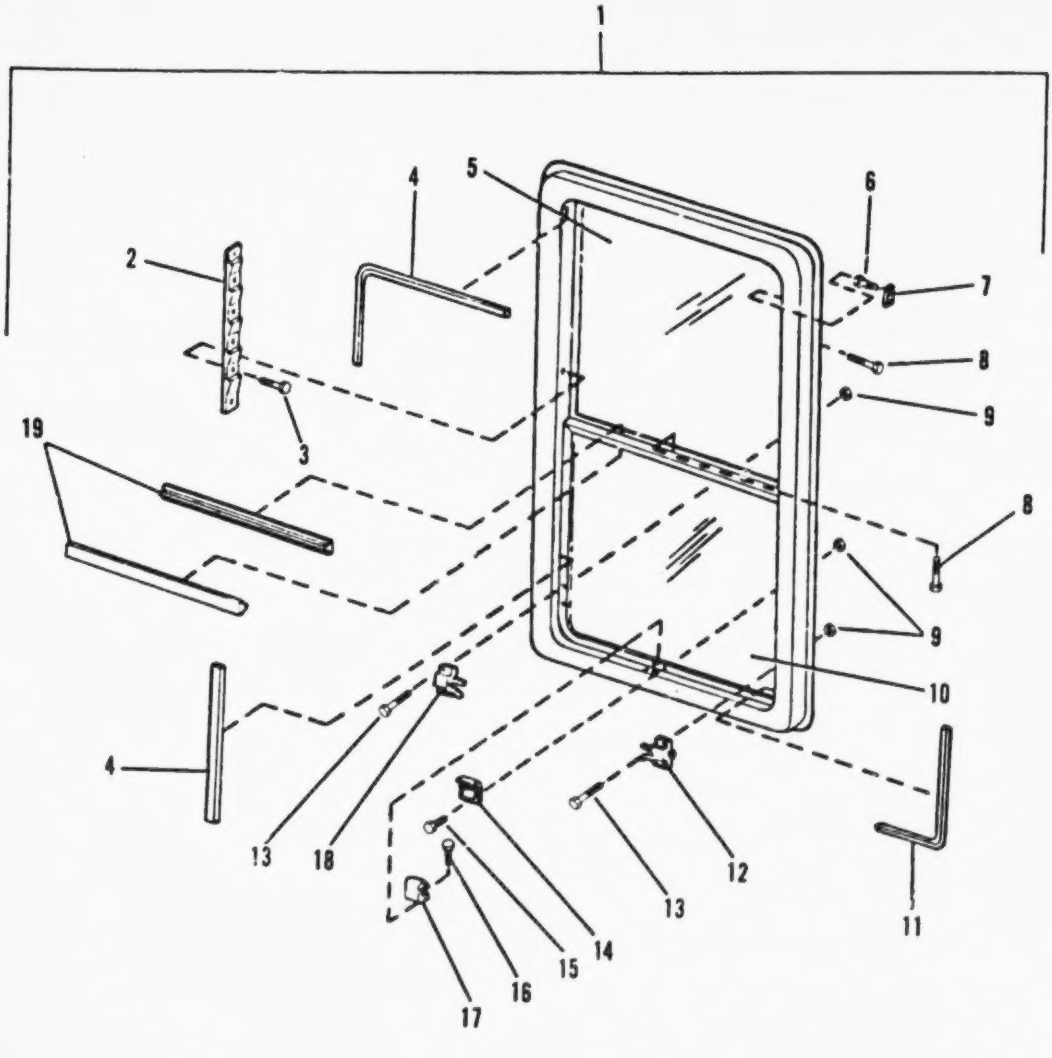

FIGURE 173. DOOR WINDOW ASSEMBLY

(1) ITEM NO	(2) SMR CODE	(3) CAGEC	(4) PART NUMBER	(5) DESCRIPTION AND USABLE ON CODES(UOC)	(6) QTY
				GROUP 1801: BODY, CAB, HOOD, AND HULL ASSEMBLIES	
				FIG. 173 DOOR WINDOW ASSEMBLY	
1	XDFFF	28882	250058	WINDOW GRP........................... UOC:V53	1
2	XDFZZ	28882	50201	.STRIP............................... UOC:V53	2
3	PAFZZ	11083	2F7306	.PARTS KIT,CARBURETO................. UOC:V53	12
4	PAFZZ	28882	64203	.NONMETALLIC CHANNEL................. UOC:V53	1
5	XDFZZ	28882	280042	.GLASS............................... UOC:V53	1
6	PAFZZ	11083	8B4338	.SCREW,TAPPING,THREA................. UOC:V53	4
7	XDFZZ	28882	64047	.STOP................................ UOC:V53	2
8	PAFZZ	11083	7K3434	.SCREW,TAPPING,THREA................. UOC:V53	4
9	PAFZZ	28882	55016	.NUT,PLAIN,BARRELL................... UOC:V53	6
10	XDFZZ	28882	280065	.GLASS............................... UOC:V53	1
11	MFFZZ	11083	5P7849	.SEAL,PREFMD,BULK MAKE FROM SEAL P/N 5P7849....................... UOC:V53	1
12	XDFZZ	28882	95052	.LOCK................................ UOC:V53	1
13	PAFZZ	11083	32C683	.SCREW,MACHINE....................... UOC:V53	4
14	XDFZZ	28882	95056	.LOCK ASSY........................... UOC:V53	1
15	PAFZZ	11083	2N3475	.SCREW,MACHINE....................... UOC:V53	2
16	PAFZZ	74006	2251-205	.SCREW,MACHINE....................... UOC:V53	2
17	PBFZZ	28882	50168	.LEAF,BUTT HINGE..................... UOC:V53	1
18	XDFZZ	28882	95051	.LOCK................................ UOC:V53	1
19	PAFZZ	28882	61001	.SEAL,WINDOW......................... UOC:V53	1

END OF FIGURE

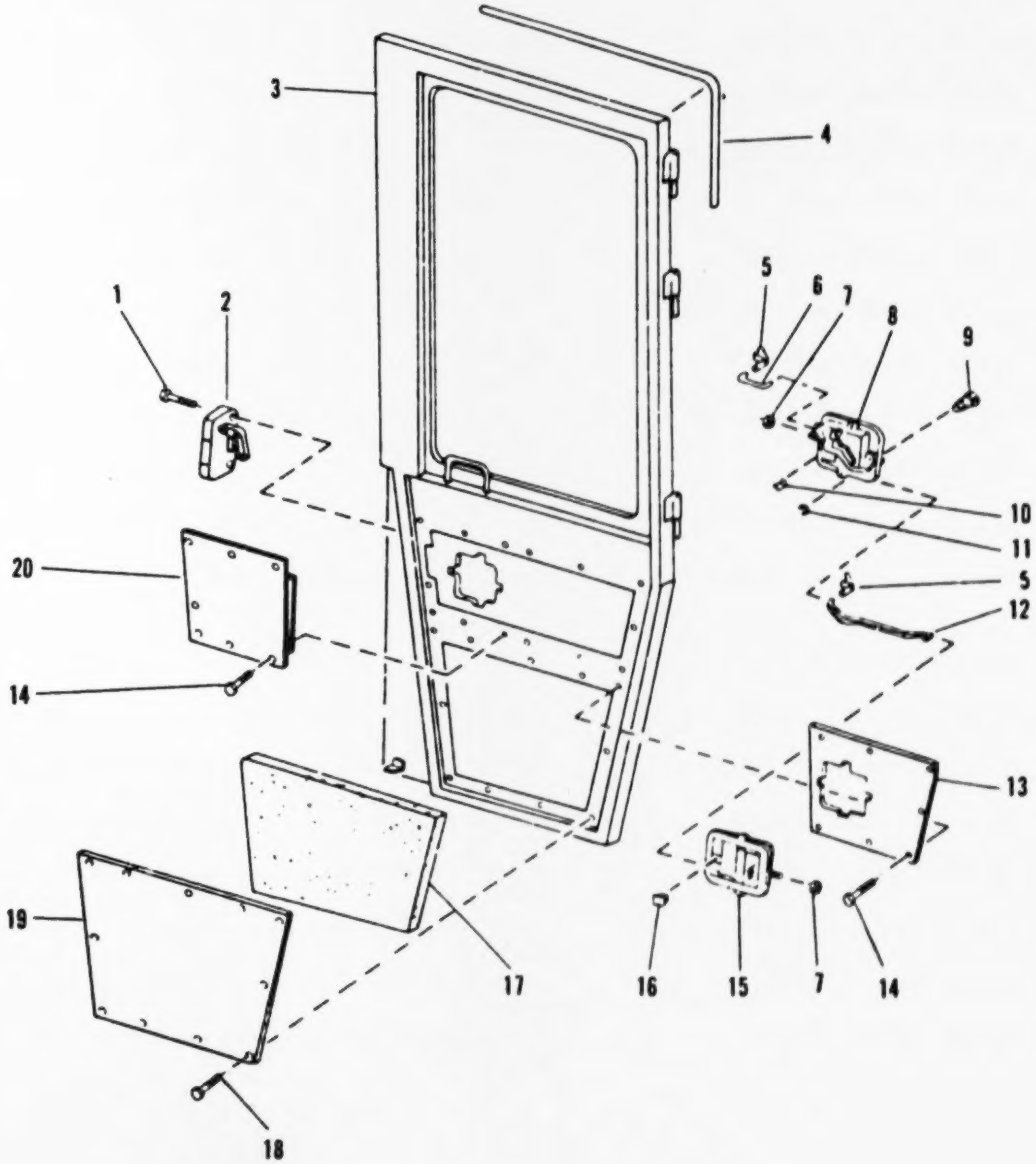

FIGURE 174. CAB DOOR ASSEMBLY

GROUP 1801: BODY, CAB, HOOD, AND HULL ASSEMBLIES

FIG. 174 CAB DOOR ASSEMBLY

(1) ITEM NO	(2) SMR CODE	(3) CAGEC	(4) PART NUMBER	(5) DESCRIPTION AND USABLE ON CODES(UOC)	(6) QTY
1	PAOZZ	80020	87750-25	BOLT,MACHINE UOC:V53	4
2	XBOZZ	70281	1016402	LATCH ASSY UOC:V53	1
3	XBOFF	11083	7V1782	DOOR ASSY UOC:V53	1
4	XBOZZ	11083	695688	SEAL,PREFMD UOC:V53	1
5	XBOZZ	11083	5P6056	CLIP,RODEND UOC:V53	4
6	XBOZZ	70281	1016411	ROD UOC:V53	1
7	PAOZZ	11083	4B2047	NUT,PLAIN,SQUARE UOC:V53	2
8	XBOZZ	70523	AVM25086	HANDLE,OUTSIDE RH UOC:V53	1
9	PFOZZ	11083	2V5652	CYLINDER,LOCK,VEHIC UOC:V53	1
10	XBOZZ	74842	HS2304B	CLIP UOC:V53	1
11	PAOZZ	79136	5133-25MD	RING,RETAINING UOC:V53	1
12	XBOZZ	70281	1016409	ROD UOC:V53	1
13	XBOZZ	70281	1015808	COVER UOC:V53	1
14	PAOZZ	11083	5P4651	SCREW,ASSEMBLED WAS UOC:V53	14
15	XBOZZ	70523	AVM25088	HANDLE,INSIDE,RH UOC:V53	1
16	XBOZZ	11083	5P6055	PLUG,LOCK UOC:V53	1
17	XBOZZ	70281	1016393	INSULATION UOC:V53	1
18	XDOZZ	11083	5P7111	SCREW,TAPPING,THREA UOC:V53	11
19	XBOZZ	70281	1015811	COVER UOC:V53	1
20	XBOZZ	11083	2V6467	COVER ASSY UOC:V53	1

END OF FIGURE

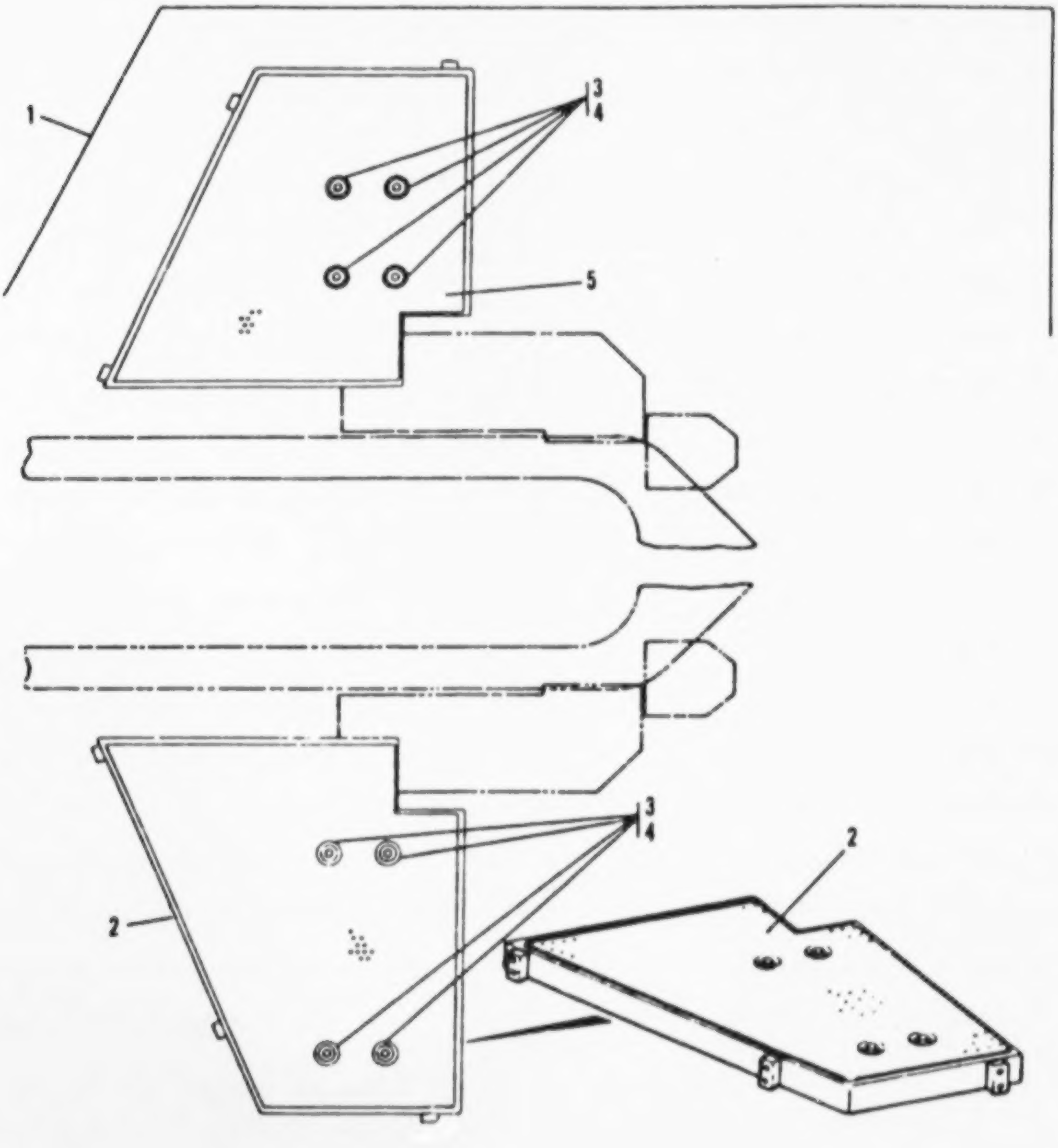

FIGURE 175. REAR FENDER ASSEMBLY

(1) ITEM NO	(2) SMR CODE	(3) CAGEC	(4) PART NUMBER	(5) DESCRIPTION AND USABLE ON CODES(UOC)	(6) QTY
				GROUP 1802: FENDERS	
				FIG. 175 REAR FENDER ASSEMBLY	
1	XDOFF	11083	1V4868	FENDER GRP,REAR...................... UOC:V53	1
2	XDOFF	11083	4V6182	.FENDER ASSY-RH...................... UOC:V53	1
3	PADZZ	11083	28947	.BOLT,MACHINE........................ UOC:V53	8
4	PADZZ	11083	8B9294	.SPACER,SLEEVE....................... UOC:V53	8
5	XDOFF	11083	4V6183	.FENDER ASSY,LH...................... UOC:V53	1

END OF FIGURE

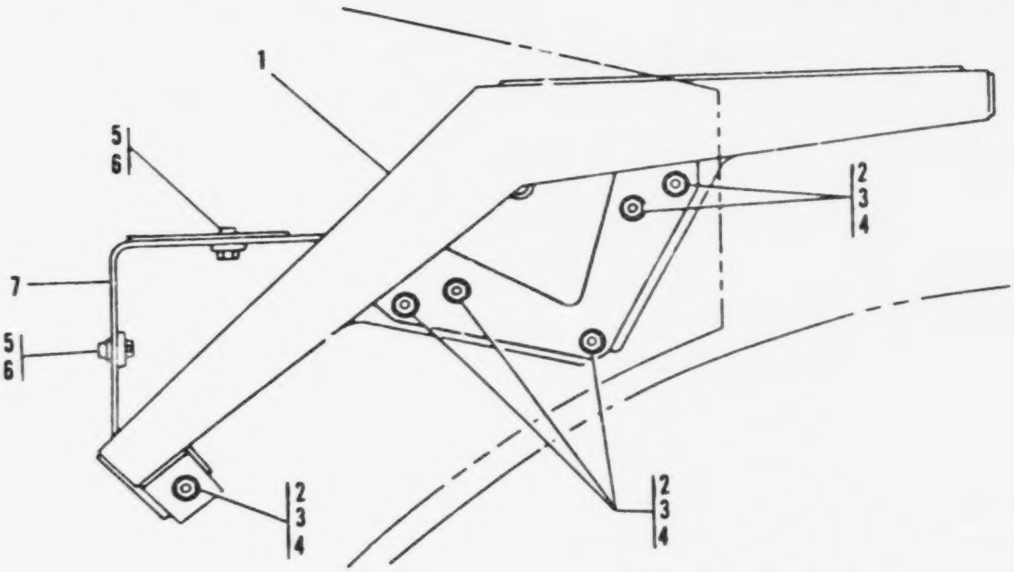
1
5
6
7
5
6
2
3
4
2
3
4
2
3
4

(1) ITEM NO	(2) SMR CODE	(3) CAGEC	(4) PART NUMBER	(5) DESCRIPTION AND USABLE ON CODES(UOC)	(6) QTY
				GROUP 1802: FENDERS	
				FIG. 176 FRONT FENDER ASSEMBLY	
1	XDOFF	11083	5V2993	FENDER ASSY-LH........................ UOC:V53	1
1	XDOFF	11083	5V2994	FENDER ASSY-RH........................ UOC:V53	1
2	PAOZZ	96906	MS51967-23	NUT,PLAIN,HEXAGON..................... UOC:V53	12
3	XDOZZ	11083	5B639	WASHER,FLAT........................... UOC:V53	12
4	PAOZZ	11083	5P8248	WASHER,FLAT........................... UOC:V53	12
5	PAOZZ	96906	MS18154-58	SCREW,CAP,HEXAGON H................... UOC:V53	4
6	PAOZZ	11083	9M6527	WASHER,FLAT........................... UOC:V53	4
7	XDOZZ	11083	2V2996	STRIP,LH.............................. UOC:V53	1
7	XDOZZ	11083	2V2997	STRIP,RH.............................. UOC:V53	1

END OF FIGURE

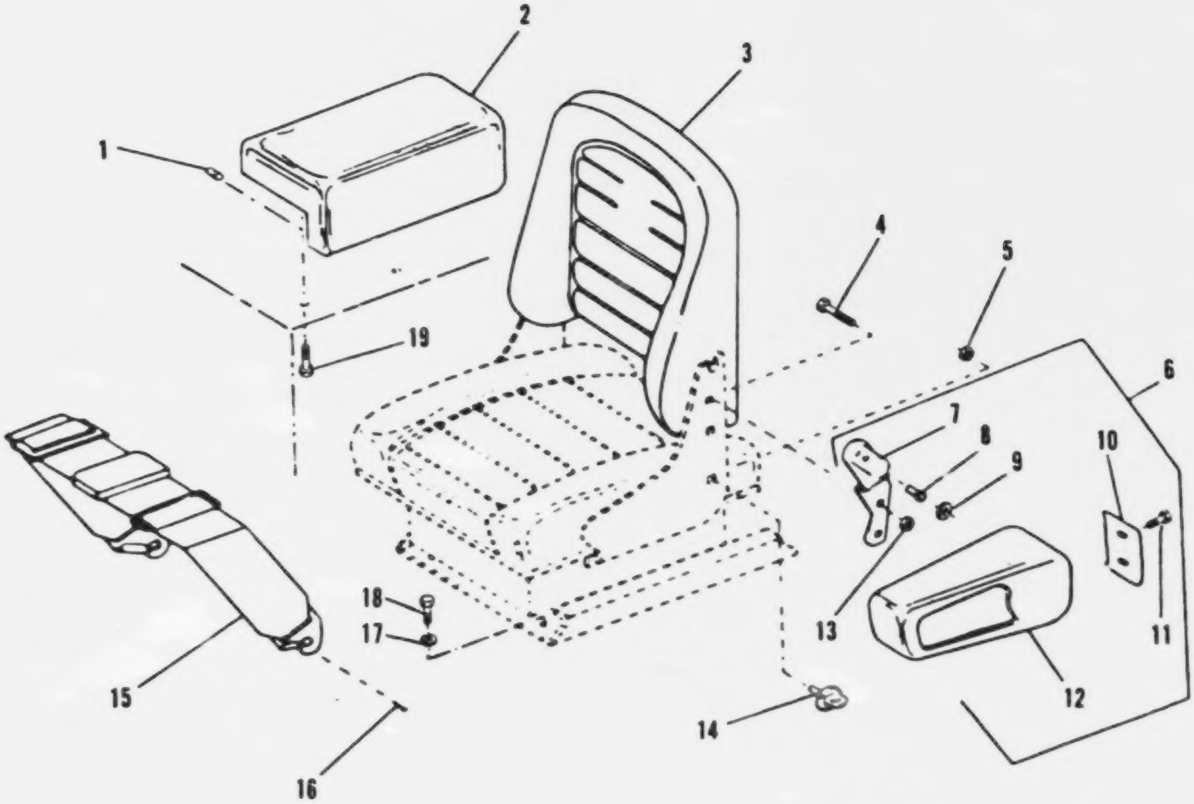

FIGURE 177. SEAT, SEAT BELT AND ARM CUSHION ASSEMBLY

(1) ITEM NO	(2) SMR CODE	(3) CAGEC	(4) PART NUMBER	(5) DESCRIPTION AND USABLE ON CODES(UOC)	(6) QTY
				GROUP 1806: UPHOLSTERY SEATS AND CARPETS	
				FIG. 177 SEAT, SEAT BELT AND ARM CUSHION ASSEMBLY	
1	XDOZZ	11083	2V2680	ROD................................... UOC:V53	2
2	XDOZZ	56854	EA-2328-000D	CUSHION ASSY.......................... UOC:V53	1
3	PAOFF	11083	3V8252	SEAT,VEHICULAR........................ UOC:V53	1
4	PAOZZ	11083	5P8945	BOLT,SQUARE NECK...................... UOC:V53	2
5	PAOZZ	82465	19089	NUT,SELF-LOCKING,EX................... UOC:V53	2
6	PAOZZ	56854	SA2450	PAD,CUSHIONING........................ UOC:V53	1
7	PAOZZ	11083	4V7848	.BRACKET,DOUBLE ANGL.................. UOC:V53	1
8	PAOZZ	11083	335358	.SCREW,SELF-LOCKING................... UOC:V53	2
9	PAOZZ	11083	3N4731	.WASHER,SPRING TENSI.................. UOC:V53	1
10	PAOZZ	11083	4V7901	.COVER,ACCESS......................... UOC:V53	1
11	XDOZZ	11083	5P7111	.SCREW,TAPPING,THREA.................. UOC:V53	2
12	XAOZZ	11083	4V8036	.PAD,CUSHIONING....................... UOC:V53	1
13	PAOZZ	11083	3K6060	NUT,SELF-LOCKING,HE................... UOC:V53	2
14	XDOZZ	86809	620059	EYEBOLT............................... UOC:V53	2
15	XDOOO	29944	1MM-47200	BELT ASSY,SEAT........................ UOC:V53	1
16	PAOZZ	96906	MS24665-134	PIN,COTTER............................ UOC:V53	1
17	PAOZZ	11083	5P1075	WASHER,SQUARE CONE.................... UOC:V53	4
18	PAOZZ	11083	343557	SCREW,SELF-LOCKING.................... UOC:V53	4
19	PAOZZ	11083	T642	BOLT,MACHINE.......................... UOC:V53	2

END OF FIGURE

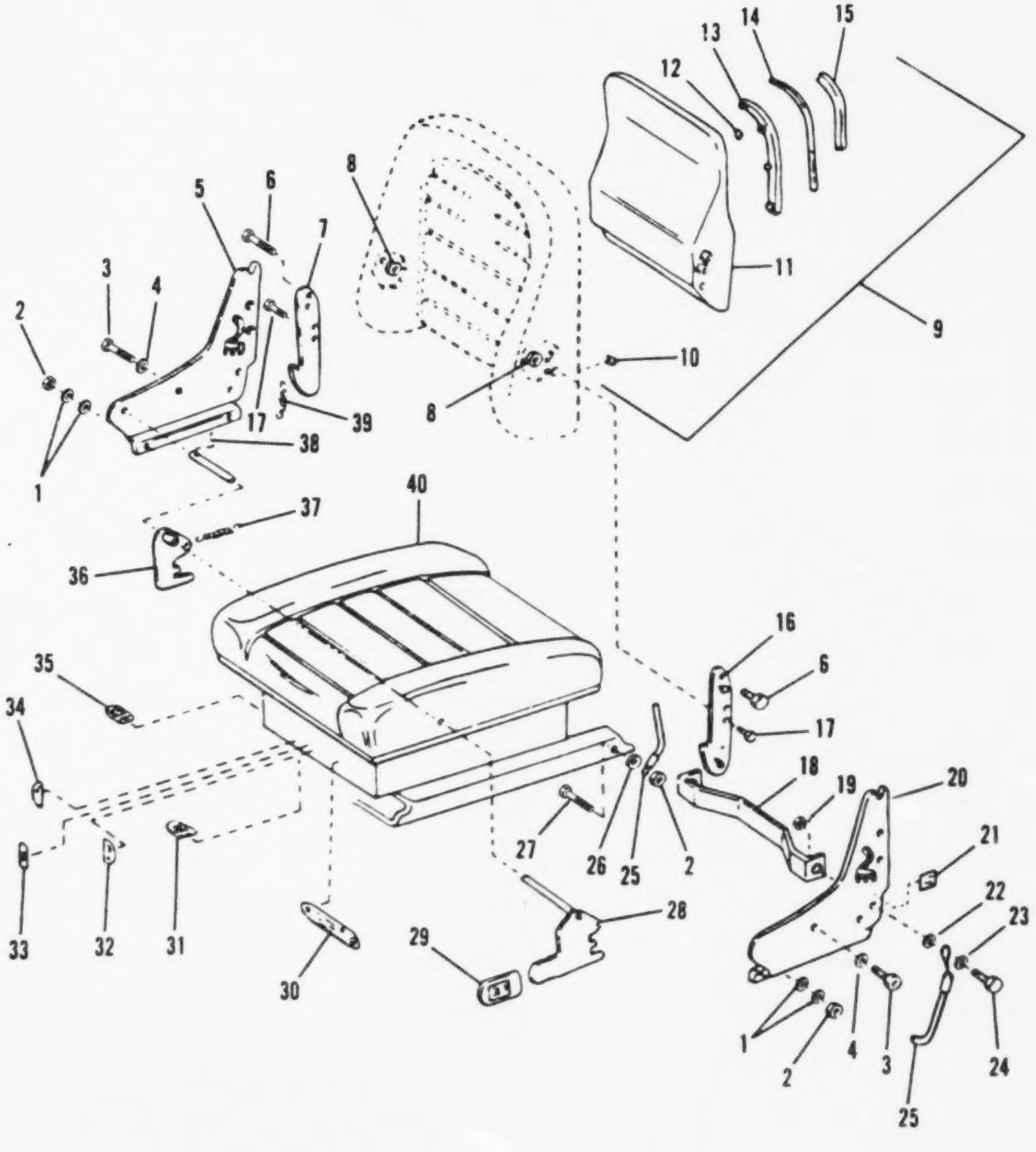

ıGURE 178. SEAT ASSEMBLY

(1) ITEM NO	(2) SMR CODE	(3) CAGEC	(4) PART NUMBER	(5) DESCRIPTION AND USABLE ON CODES(UOC)	(6) QTY
				GROUP 1806: UPHOLSTERY SEATS AND CARPETS	
				FIG. 178 SEAT ASSEMBLY	
1	PAFZZ	11083	3P9900	WASHER,FLAT UOC:V53	2
2	PAFZZ	11083	2K4973	LOCKNUT UOC:V53	4
3	PAFZZ	96906	MS90728-113	SCREW,CAP,HEXAGON H UOC:V53	1
4	PAFZZ	11083	4V8586	WASHER,FLAT UOC:V53	1
5	PAFZZ	11083	4V8026	BRACKET,ANGLE UOC:V53	1
6	PFOZZ	11083	5M3062	BOLT,MACHINE UOC:V53	1
6	PFFZZ	11083	5M3062	BOLT,MACHINE UOC:V53	1
7	XBOZZ	11083	4V7904	HOLDER,DOOR UOC:V53	1
8	PAFZZ	82458	TLNF-3816-S	NUT,PLAIN,EXTENDED UOC:V53	1
8	PAOZZ	82458	TLNF-3816-S	NUT,PLAIN,EXTENDED UOC:V53	1
9	PFFFF	11083	4V8259	CUSHION,SEAT,VEHICU UOC:V53	1
10	PAOZZ	11083	4V8579	.CLIP,SPRING TENSION UOC:V53	1
11	PFOZZ	11083	4V7902	.CUSHION,SEAT BACK,V UOC:V53	1
12	PFOZZ	77122	PS250085-PG	.PUSH ON NUT UOC:V53	19
13	XAOZZ	11083	4V8025	.CHANNEL UOC:V53	1
14	XDOZZ	11083	5P3841	.SEAL,BULK UOC:V53	1
15	XAOZZ	77824	4244-0156-2	.STRIP UOC:V53	1
16	XBOZZ	11083	4V7908	HOLDER,DOOR UOC:V53	1
17	PAFZZ	96906	MS24667-51	SCREW,CAP,SOCKET HE UOC:V53	1
17	PAOZZ	96906	MS24667-51	SCREW,CAP,SOCKET HE UOC:V53	1
18	PAFZZ	11083	4V8033	BRACE,SEAT,VEHICULA UOC:V53	1
19	PAFZZ	82458	LK-1213-S	NUT,SELF-LOCKING,CL UOC:V53	2
20	PAFZZ	11083	4V8029	BRACKET,DOUBLE ANGL UOC:V53	1
21	XDFZZ	11083	5V1493	FILM	1

(1) ITEM NO	(2) SMR CODE	(3) CAGEC	(4) PART NUMBER	(5) DESCRIPTION AND USABLE ON CODES(UOC)	(6) QTY
				UOC:V53	
22	PAFZZ	11083	4B4280	WASHER,FLAT......................... UOC:V53	2
23	PAFZZ	15434	S658	WASHER,FLAT......................... UOC:V53	2
24	PAFZZ	11083	4V8034	BOLT,MACHINE........................ UOC:V53	2
25	PAFZZ	11083	4V8032	WIRE ROPE ASSEMBLY,................. UOC:V53	2
26	PAFZZ	11083	4V86C5	SPACER,PLATE........................ UOC:V53	2
27	PAFZZ	96906	MS35307-359	SCREW,CAP,HEXAGON H................. UOC:V53	2
28	XDFZZ	11083	4V8587	LATCH ASSY.......................... UOC:V53	1
29	PAFZZ	11083	4V8035	PLATE,IDENTIFICATIC................. UOC:V53	1
30	XDFZZ	11083	4V7883	FILM................................ UOC:V53	1
31	PAFZZ	11083	4V7865	CAP,SEAT ADJUSTER,L................. UOC:V53	1
32	XDFZZ	11083	4V7878	FILM................................ UOC:V53	1
33	XDFZZ	11083	4V7879	FILM................................ UOC:V53	1
34	XDFZZ	11083	4V7880	FILM................................ UOC:V53	1
35	PAFZZ	11083	4V7856	CAP,SEAT ADJUSTER,L................. UOC:V53	1
36	XDFZZ	11083	5V5232	LATCH ASSY.......................... UOC:V53	1
37	PAFZZ	11083	4V8256	SPRING,HELICAL,EXTE................. UOC:V53	2
38	PAFZZ	11083	3L1473	PIN,GROOVED,HEADLES................. UOC:V53	1
39	PAFZZ	11083	4V8031	SPRING,HELICAL,EXTE................. UOC:V53	2
40	XDFZZ	56854	SA2461-C00E	CUSHION ASSY........................ UOC:V53	1

END OF FIGURE

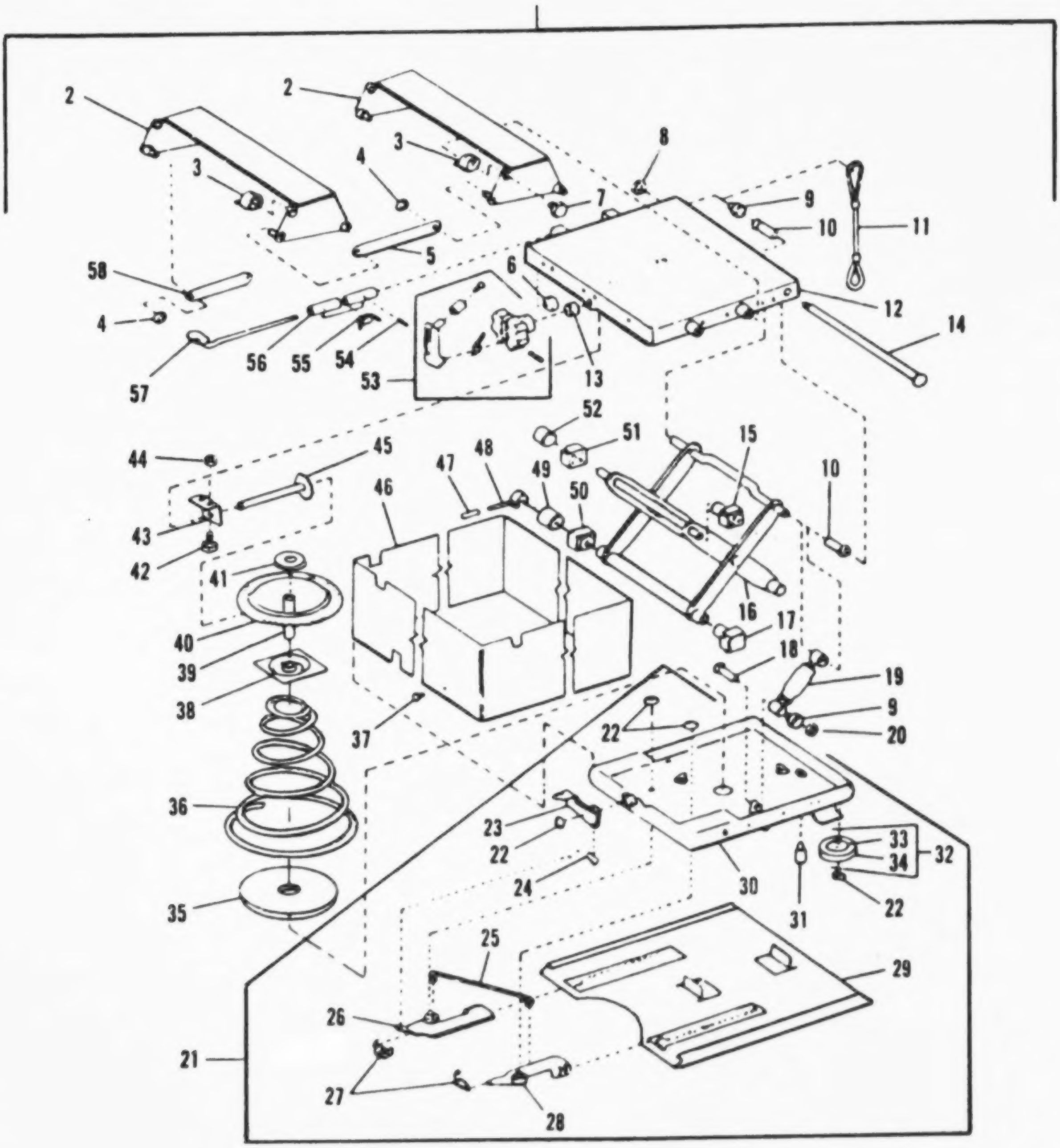

FIGURE 179. SEAT SUSPENSION ASSEMBLY

(1) ITEM NO	(2) SMR CODE	(3) CAGEC	(4) PART NUMBER	(5) DESCRIPTION AND USABLE ON CODES(UOC)	(6) QTY
				GROUP 1806: UPHOLSTERY SEATS AND CARPETS	
				FIG. 179 SEAT SUSPENSION ASSEMBLY	
1	XBFFF	11083	5V4861	SEAT,VEHICULAR........................ UOC:V53	1
2	PAFZZ	11083	5V5233	.LINK ASSEMBLY........................ UOC:V53	2
3	PAFZZ	11083	4V7895	.SPRING,HELICAL,TORS.................. UOC:V53	2
4	PAFZZ	77122	PS50C016-PG	.PUSH ON NUT.......................... UOC:V53	2
5	PAFZZ	11083	4V8265	.CONNECTING LINK,RIG.................. UOC:V53	1
6	PAFZZ	11083	4V8555	.BUMPER,NONMETALLIC................... UOC:V53	2
7	PAFZZ	11083	5V4855	.PLUG,MACHINE THREAD.................. UOC:V53	4
8	PAFZZ	82465	29NTE1213	.NUT,SELF-LOCKING,HE.................. UOC:V53	2
9	PAFZZ	11083	4V7884	.BEARING,SLEEVE....................... UOC:V53	2
10	PAFZZ	11083	4V8577	.BEARING,SLEEVE....................... UOC:V53	4
11	XDFZZ	11083	4V7886	.CABLE................................ UOC:V53	1
12	PAFZZ	11083	4V8606	.HOUSING,MECHANICAL................... UOC:V53	1
13	XDFZZ	11083	4V8560	.SPACER............................... UOC:V53	1
14	PAFZZ	11083	4V8576	.PIN,STRAIGHT,HEADED.................. UOC:V53	2
15	PAFZZ	11083	4V8591	.BLOCK,SEAT SUSPENSI.................. UOC:V53	1
16	PAFZZ	11083	5V4846	.ARM ASSEMBLY......................... UOC:V53	1
17	PAFZZ	11083	4V8583	.BLOCK,SEAT SUSPENSI.................. UOC:V53	1
18	PAFZZ	11083	4V8556	.BOLT,SHOULDER........................ UOC:V53	1
19	XDFZZ	76110	765	.SHOCK ABSORBER....................... UOC:V53	1
20	PFFZZ	11083	6D47	.NUT,SELF-LOCKING,HE.................. UOC:V53	1
21	PFFFF	11083	4V7849	.ADJUSTER ASSEMBLY,S.................. UOC:V53	1
22	PAFZZ	77122	PS50C016-PG	..PUSH ON NUT......................... UOC:V53	9
23	PAFZZ	11083	4V7860	..LEVER,REMOTE CONTRO................. UOC:V53	1
24	PAFZZ	11083	4V7859	..ROD,LATCH,SEAT ADJU.................	1

(1) ITEM NO	(2) SMR CODE	(3) CAGEC	(4) PART NUMBER	(5) DESCRIPTION AND USABLE ON CODES(UOC)	(6) QTY
				UCC:V53	
25	PAFZZ	11083	4V7881	..RCD,LATCH,SEAT ADJU.................. UCC:V53	1
26	PAFZZ	11083	4V7857	..LATCH ASSEMBLY....................... UCC:V53	1
27	PAFZZ	11083	4V8256	..SPRING,HELICAL,EXTE.................. UCC:V53	2
28	PAFZZ	11083	4V7855	..LATCH ASSEMBLY,SEAT.................. UCC:V53	1
29	XAFZZ	11083	4V7850	..PLATE,SLIDE TRACK.................... UCC:V53	1
30	XAFZZ	11083	4V7851	..HOUSING ASSEMBLY..................... UCC:V53	1
31	PAFZZ	11083	4V7864	..SCREW,CAP,SOCKET HE.................. UCC:V53	1
32	XDFZZ	11083	4V7861	..RCLLER ASSY.......................... UCC:V53	4
33	XDFZZ	11083	4V7862	...RCLLER.............................. UCC:V53	1
34	PAFZZ	11083	8D4146	...BEARING,BALL ANNULA................. UCC:V53	1
35	XBFZZ	11083	4V8261	.PAD................................... UCC:V53	1
36	XBFZZ	11083	4V8610	.SPRING,HELICAL,COMP................... UCC:V53	1
37	XDFZZ	11083	254-16C8C1-00	.FASTENER.............................. UCC:V53	23
38	PAFZZ	11083	4V8562	.COVER,ACCESS.......................... UCC:V53	1
39	PAFZZ	11083	3K8564	.PIN,GROOVED,HEADLES................... UCC:V53	2
40	PAFZZ	11083	4V8566	.GEARSHAFT,SPUR........................ UCC:V53	1
41	PAFZZ	11083	4V8561	.WASHER,FLAT........................... UCC:V53	1
42	PAFZZ	96906	MS35751-15	.BOLT,SQUARE NECK...................... UCC:V53	2
43	PAFZZ	11083	4V8554	.BRACKET,ANGLE......................... UCC:V53	1
44	PAFZZ	80205	NAS1408A4	.NUT,SELF-LOCKING,HE................... UCC:V53	2
45	XDFZZ	11083	4V8557	.GEAR ASSY............................. UCC:V53	1
46	PAFZZ	11083	4V86C9	.BOOT,SEAT............................. UCC:V53	1
47	PFFZZ	64959	BA98203-116	.PIN,SPRING............................ UCC:V53	1
48	PAFZZ	11083	4V8565	.INDICATOR,SEAT........................ UCC:V53	1
49	XDFZZ	11083	4V8270	.SLEEVE................................ UCC:V53	1
50	PAFZZ	11083	4V8257	.MOUNT,RESILIENT.......................	1

(1) ITEM NO	(2) SMR CODE	(3) CAGEC	(4) PART NUMBER	(5) DESCRIPTION AND USABLE ON CODES(UOC)	(6) QTY
				UOC:V53	
51	PAFZZ	11083	4V6580	.BLOCK,SEAT SUSPENSI................ UOC:V53	1
52	XDFZZ	11083	4V7885	.SLEEVE........................... UOC:V53	1
53	PAFZZ	11083	4V7812	.KNOB............................. UOC:V53	1
54	PAFZZ	11083	3L1473	.PIN,GROOVED,HEADLES.............. UOC:V53	1
55	PAFZZ	11083	4V7850	.SPRING,HELICAL,TORS.............. UOC:V53	1
56	PAFZZ	11083	4V7851	.LATCH ASSEMBLY................... UOC:V53	1
57	XDFZZ	11083	4V7889	.LEVER............................ UOC:V53	1
58	PAFZZ	11083	4V8264	.CONNECTING LINK,RIG.............. UOC:V53	1

END OF FIGURE

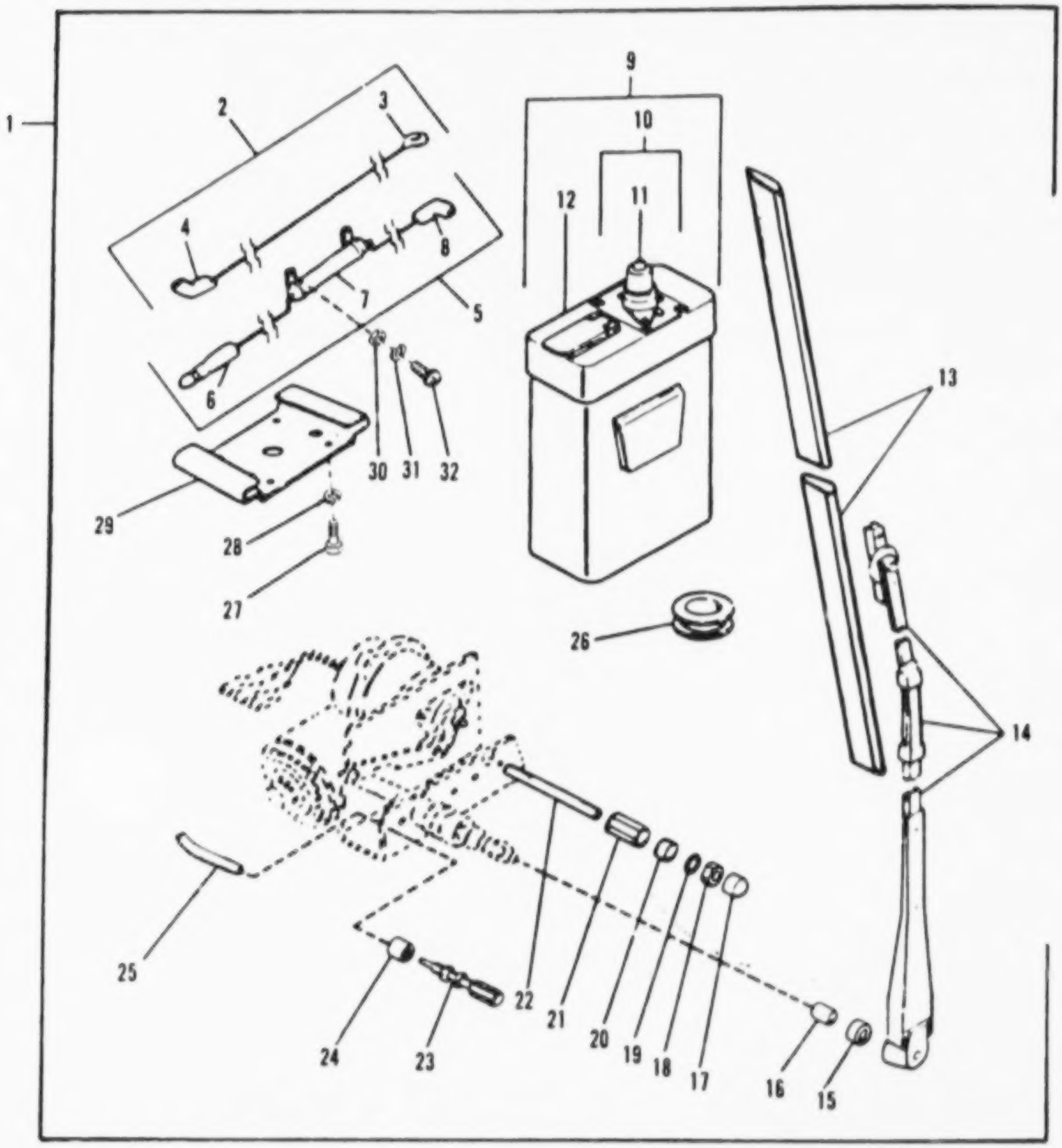

FIGURE 180. WASHER AND WIPER ASSEMBLY

(1) ITEM NO	(2) SMR CODE	(3) CAGEC	(4) PART NUMBER	(5) DESCRIPTION AND USABLE ON CODES(UOC)	(6) QTY
				GROUP 22: ACCESSORY ITEMS	
				GROUP 2202: ACCESSORY ITEMS	
				FIG. 180 WASHER AND WIPER ASSEMBLY	
1	XDOOO	11083	1V4891	WASHER AND WIPER GP.................. UOC:V53	1
2	MOOOO	11083	2V4305	.WIRE ASSY MAKE FROM WIRE P/N 5P396 UOC:V53	1
3	PAOZZ	11083	2L8074	..TERMINAL,LUG..................... UOC:V53	1
4	PFOZZ	79550	412026	..TERMINAL,QUICK DISC.............. UOC:V53	1
5	MOOOO	11083	2V4306	.WIRE ASSY MAKE FROM WIRE P/N 5P641 UOC:V53	1
6	PAOZZ	79550	11722	..CONNECTOR,PLUG,ELEC.............. UOC:V53	1
7	XDOZZ	44655	020CR	..RESISTOR,FIXED,WIRE.............. UOC:V53	1
8	PFOZZ	79550	412026	..TERMINAL,QUICK DISC.............. UOC:V53	1
9	XDOZZ	60703	87900-85	.WASHER GRP,WSHLD.................. UOC:V53	1
10	XDOOO	60703	88841-28	..PUMP ASSY........................ UOC:V53	1
11	PAOZZ	60703	87883-4	...STRAINER ELEMENT,SE............. UOC:V53	1
12	XDOZZ	60703	89448	..RESERVOIR,WASHER................. UOC:V53	1
13	PAOZZ	70412	18782	.BLADE,WINDSHIELD WI............... UOC:V53	1
14	XDOZZ	70412	13440	.ARM ASSY,WSHLD WIPE............... UOC:V53	1
15	XDOZZ	11083	9M5052	.SPACER............................ UOC:V53	1
16	XDOZZ	11083	3V8103	.SPACER............................ UOC:V53	1
17	PAOZZ	11083	7D5272	.NUT,PLAIN,CAP..................... UOC:V53	3
18	PAOZZ	11083	5M1311	.NUT,PLAIN,HEXAGON................. UOC:V53	3
19	PAOZZ	11083	2D6392	.GASKET............................ UOC:V53	3
20	XDOZZ	11083	2V2245	.RETAINER.......................... UOC:V53	3
21	XDOZZ	11083	2V2244	.SPACER............................ UOC:V53	3
22	PAOZZ	11083	5S8558	.STUD,PLAIN........................ UOC:V53	3
23	XDOOO	11083	4V3527	.NOZZLE ASSY....................... UOC:V53	1

(1) ITEM NO	(2) SMR CODE	(3) CAGEC	(4) PART NUMBER	(5) DESCRIPTION AND USABLE ON CODES(UOC)	(6) QTY
24	PFOZZ	11083	28941	.SPACER,SLEEVE........................ UOC:V53	1
25	PAOZZ	24161	4040	.HOSE,BULK........................... UOC:V53	1
26	PAOZZ	11083	80482	.GROMMET,RUBBER....................... UOC:V53	1
27	PAOZZ	66503	188668	.SCREW,MACHINE........................ UOC:V53	2
28	PAOZZ	11083	3B4503	.WASHER,LOCK.......................... UOC:V53	2
29	PFOZZ	60703	90128	.STRAP,MOUNTING....................... UOC:V53	1
30	PAOZZ	11083	4B2041	.NUT.................................. UOC:V53	2
31	PAOZZ	80205	NAS1676-6	.WASHER,LOCK.......................... UOC:V53	2
32	PAOZZ	33525	1726-0608	.SCREW,MACHINE........................ UOC:V53	2

END OF FIGURE

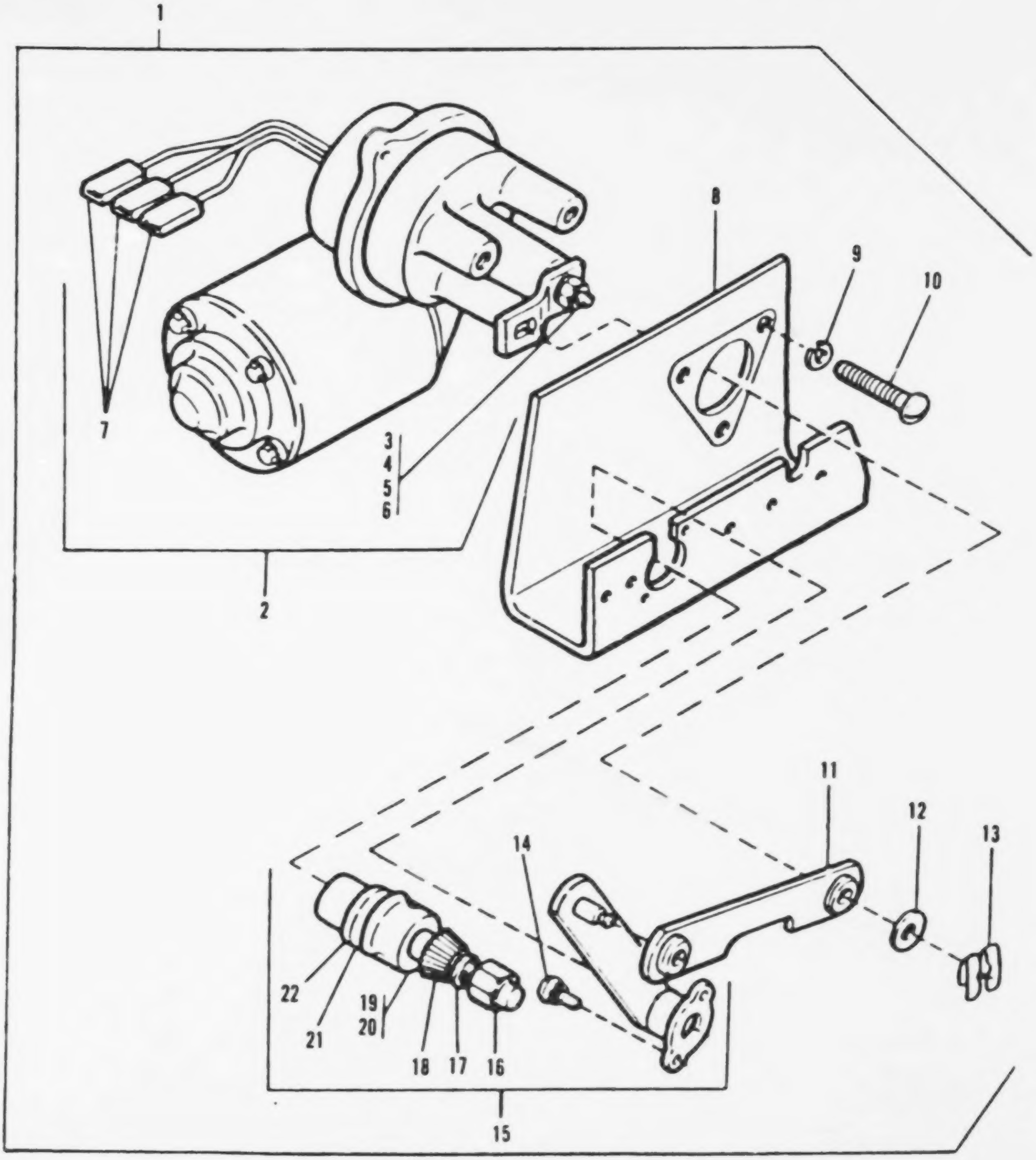

FIGURE 181. FRONT WIPER MOTOR ASSEMBLY

(1) ITEM NO	(2) SMR CODE	(3) CAGEC	(4) PART NUMBER	(5) DESCRIPTION AND USABLE ON CODES(UOC)	(6) QTY
				GROUP 2202: ACCESSORY ITEMS	
				FIG. 181 FRONT WIPER MOTOR ASSEMBLY	
1	XDOOO	99066	11694-20-M027WC	WIPER GRP............................ UOC:V53	1
2	XDOOO	99066	WWC-24L620-S	.MOTOR ASSY,WIPER.................... UOC:V53	1
3	PAOZZ	11083	7F9223	..WASHER,LOCK........................ UOC:V53	1
4	PAOZZ	96906	MS35690-424	..NUT,PLAIN,HEXAGON.................. UOC:V53	1
5	PBOZZ	24956	LE721125A-1	..ARM,DRIVE.......................... UOC:V53	1
6	PAOZZ	11083	4D7421	..WASHER............................. UOC:V53	1
7	PAOZZ	79550	11856	..TERMINAL,QUICK DISC................ UOC:V53	3
8	PBOZZ	99066	BK721005	.BRACKET............................. UOC:V53	1
9	PAOZZ	11083	1H3338	.LOCKWASHER.......................... UOC:V53	3
10	PAOZZ	11083	4B1264	.SCREW............................... UOC:V53	3
11	PBOZZ	01843	LK721014A	.LINK ASSY,CONNECTIN................. UOC:V53	1
12	PAOZZ	11083	4D7416	.SPACER.............................. UOC:V53	2
13	PAOZZ	01843	SP7211	.CLIP................................ UOC:V53	2
14	PAOZZ	11083	8F1315	.SCREW,EXTERNALLY RE................. UOC:V53	2
15	PAOZZ	99066	CP721084	.CAP................................. UOC:V53	1
16	PAOZZ	82484	C-1421-1	..NUT,PLAIN,CAP...................... UOC:V53	1
17	PAOZZ	11083	9F5644	..WASHER,LOCK........................ UOC:V53	1
18	PAOZZ	99066	NT721017	..DRIVE ADAPTER,WINDS................ UOC:V53	1
19	PAOZZ	99066	CP721084	..CAP................................ UOC:V53	1
20	PAOZZ	01843	NT721021	..NUT,PLAIN,HEXAGON.................. UOC:V53	1
21	PAOZZ	11083	4B1550	..WASHER............................. UOC:V53	1
22	PAOZZ	11083	9S8016	..GASKET............................. UOC:V53	1

END OF FIGURE

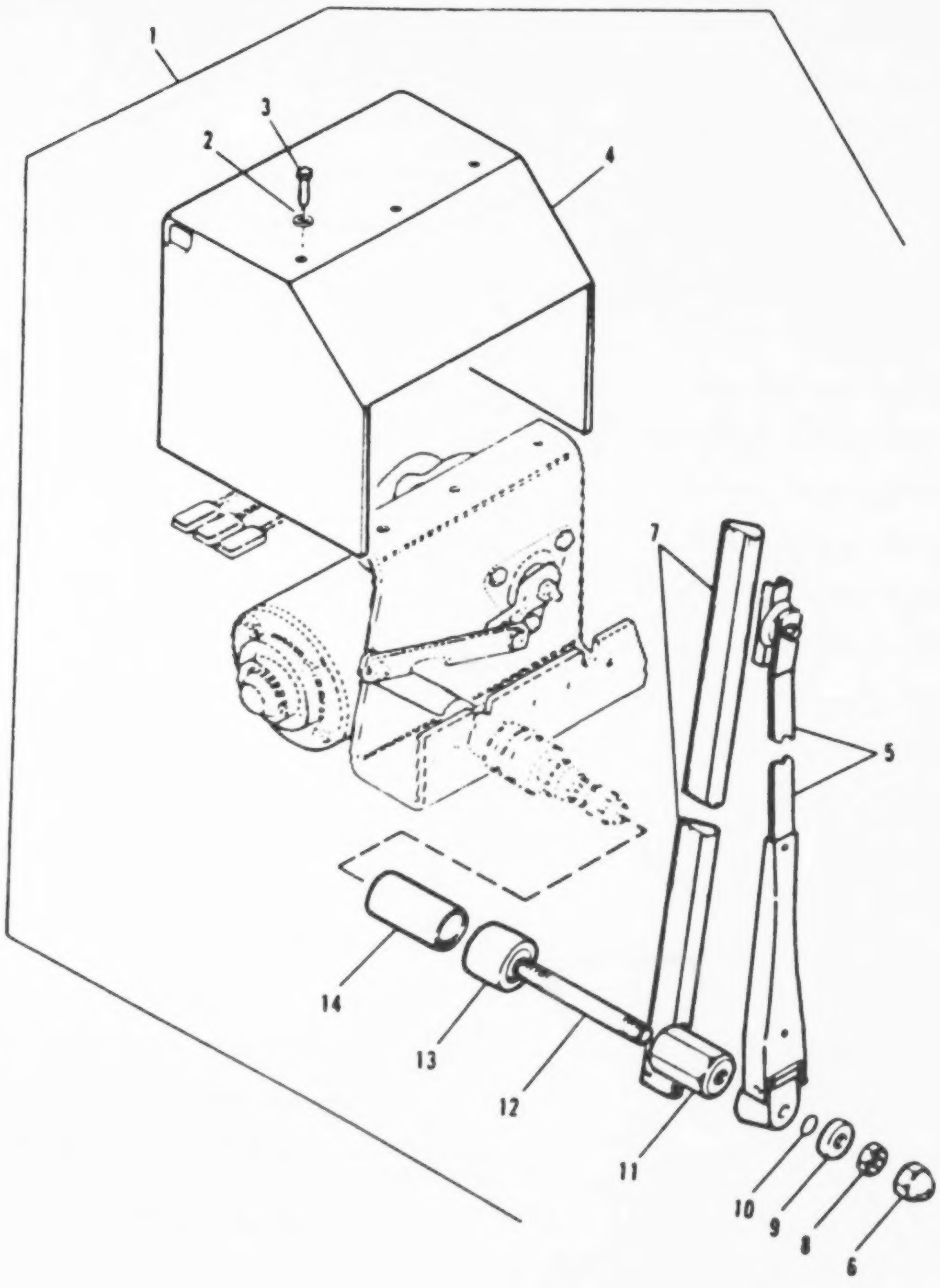

FIGURE 182. REAR WIPER ASSEMBLY

(1) ITEM NO	(2) SMR CODE	(3) CAGEC	(4) PART NUMBER	(5) DESCRIPTION AND USABLE ON CODES(UOC)	(6) QTY
				GROUP 2202: ACCESSORY ITEMS	
				FIG. 182 REAR WIPER ASSEMBLY	
1	XBOFF	11083	5R4530	WIPER GRP,REAR........................ UOC:V53	1
2	PAOZZ	78189	WD23875	.WASHER,SPRING TENSI................ UOC:V53	3
3	PAOZZ	11083	6F7C27	.BOLT,MACHINE....................... UOC:V53	3
4	XDOZZ	11083	5R4527	.COVER.............................. UOC:V53	1
5	XDOZZ	60703	87415-5C6TM	.ARM ASSY,WIPER..................... UOC:V53	1
6	PAOZZ	11083	7D5272	.NUT,PLAIN,CAP...................... UOC:V53	4
7	XDOZZ	90412	18742	.BLADE.............................. UOC:V53	1
8	PAOZZ	11083	9M1311	.NUT,PLAIN,HEXAGON.................. UOC:V53	4
9	XDOZZ	11083	2V2245	.RETAINER........................... UOC:V53	4
10	PAOZZ	11083	2D6392	.GASKET............................. UOC:V53	4
11	XDOZZ	11083	2V2244	.SPACER............................. UOC:V53	4
12	PAOZZ	11083	5S8558	.STUD,PLAIN......................... UOC:V53	4
13	XDOZZ	11083	9M5052	.SPACER............................. UOC:V53	1
14	XDOZZ	11083	3V8103	.SPACER............................. UOC:V53	1

END OF FIGURE

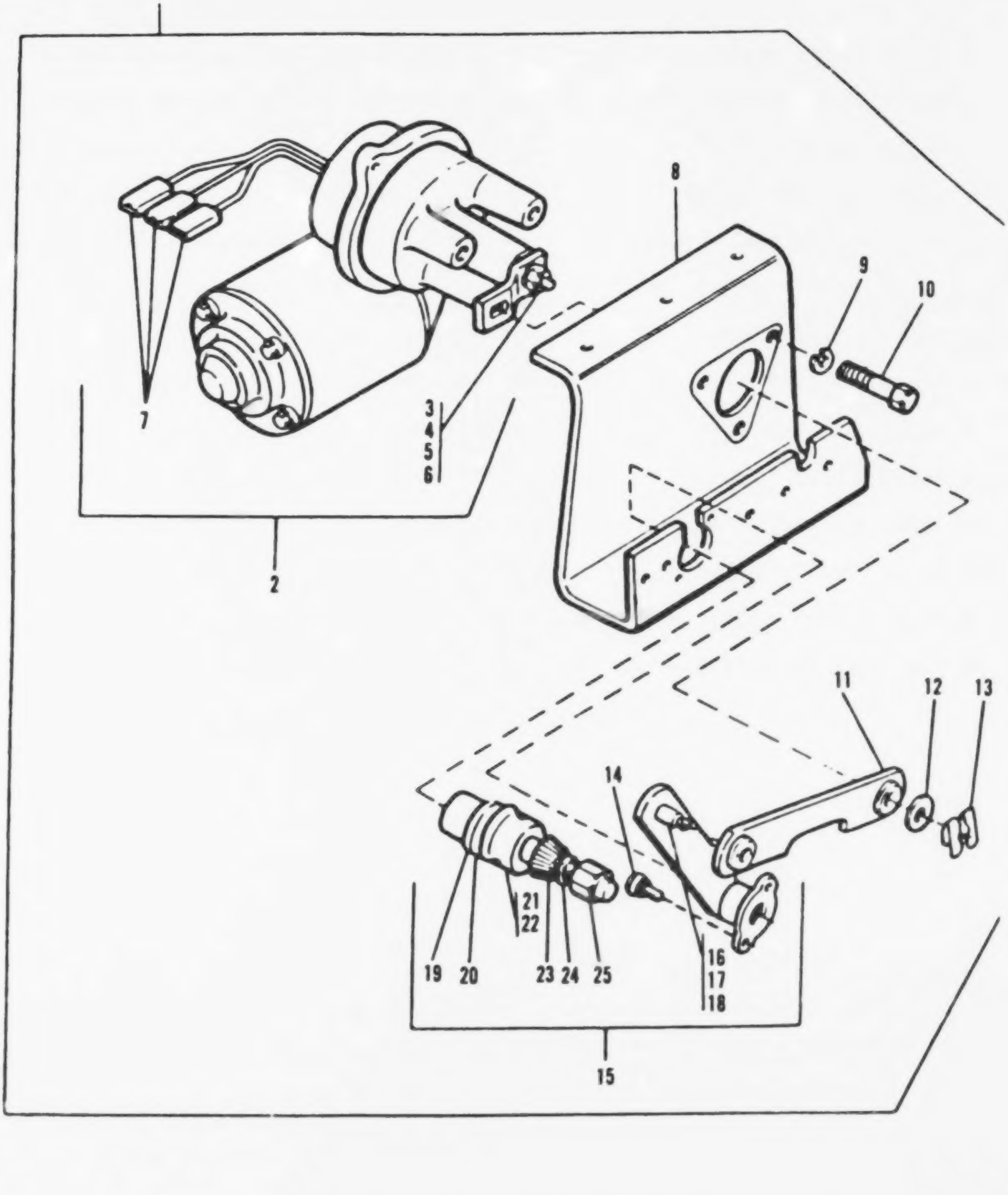

FIGURE 183. REAR WIPER MOTOR ASSEMBLY

(1) ITEM NO	(2) SMR CODE	(3) CAGEC	(4) PART NUMBER	(5) DESCRIPTION AND USABLE ON CODES(UOC)	(6) QTY
				GROUP 2202: ACCESSORY ITEMS	
				FIG. 183 REAR WIPER MOTOR ASSEMBLY	
1	XDOOO	11083	5R4528	WIPER GRP,BSC........................ UOC:V53	1
2	XDOFF	99066	WWC24L8C4-38	.MOTOR ASSY......................... UOC:V53	1
3	PAOZZ	11083	7F9223	..WASHER,LOCK....................... UOC:V53	1
4	PAOZZ	96906	MS35690-424	..NUT,PLAIN,HEXAGON................. UOC:V53	1
5	PAOZZ	11083	4D7421	..WASHER............................ UOC:V53	1
6	XDOZZ	11083	6K5499	..ARM,DRIVE......................... UOC:V53	1
7	PAOZZ	11083	7K4475	..LEAD,ELECTRICAL................... UOC:V53	3
8	XDOZZ	11083	5R4483	.BRACKET............................ UOC:V53	1
9	PAOZZ	11083	1H3338	.LOCKWASHER......................... UOC:V53	3
10	PAOZZ	77445	414419	.BOLT,MACHINE....................... UOC:V53	3
11	PBOZZ	01843	LK721014A	.LINK ASSY,CONNECTIN................ UOC:V53	1
12	PAOZZ	11083	4D7416	.SPACER............................. UOC:V53	2
13	PBOZZ	11083	4D7411	.CLIP,LOCK.......................... UOC:V53	2
14	PAOZZ	11083	8F1315	.SCREW,EXTERNALLY RE................ UOC:V53	2
15	XDOZZ	99066	SH721203A	.PIVOT ASSY,SHAFT................... UOC:V53	1
16	PAOZZ	11083	9M1311	..NUT,PLAIN,HEXAGON................. UOC:V53	1
17	XDOZZ	11083	1H3244	..LOCKWASHER........................ UOC:V53	1
18	PAOZZ	70412	50957	..BOLT,SHOULDER..................... UOC:V53	1
19	PAOZZ	11083	9S8016	..GASKET............................ UOC:V53	1
20	PAOZZ	11083	4B1550	..WASHER............................ UOC:V53	1
21	PAOZZ	99066	CP721084	..CAP............................... UOC:V53	1
22	PAOZZ	01843	NT721021	..NUT,PLAIN,HEXAGON................. UOC:V53	1
23	PAOZZ	99066	NT721017	..DRIVE ADAPTER,WINDS............... UOC:V53	1
24	PAOZZ	11083	9F5644	..WASHER,LOCK....................... UOC:V53	1

(1) ITEM NO	(2) SMR CODE	(3) CAGEC	(4) PART NUMBER	(5) DESCRIPTION AND USABLE ON CODES(UOC)	(6) QTY
25	PAOZZ	82484	C-1421-1	..NUT,PLAIN,CAP.................... UOC:V53	1

END OF FIGURE

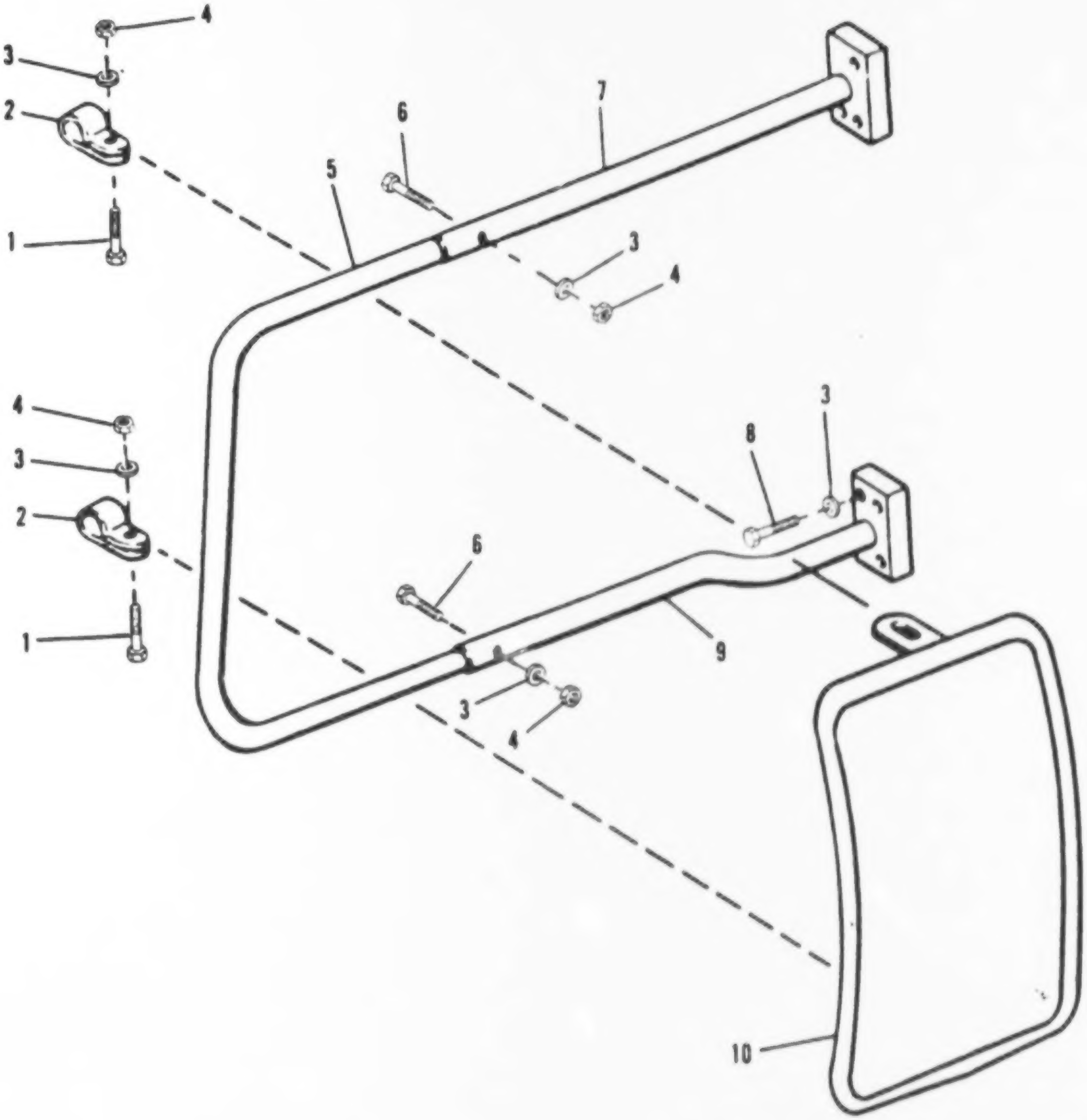

FIGURE 184. REARVIEW MIRROR ASSEMBLY

(1) ITEM NO	(2) SMR CODE	(3) CAGEC	(4) PART NUMBER	(5) DESCRIPTION AND USABLE ON CODES(UOC)	(6) QTY
				GROUP 2202: ACCESSORY ITEMS	
				FIG. 184 REARVIEW MIRROR ASSEMBLY	
1	PAOZZ	11083	0S1594	BOLT,MACHINE........................ UOC:V53	4
2	XDOZZ	70C82	7623	CLAMP............................... UOC:V53	4
3	PAOZZ	11083	5M2894	WASHER,FLAT......................... UOC:V53	4
4	PAOZZ	96906	MS35691-17	NUT,PLAIN,HEXAGON................... UOC:V53	8
5	XDOZZ	70C82	5260	TUBE................................ UOC:V53	1
5	XDOZZ	70C82	5259	TUBE................................ UOC:V53	1
6	PAOZZ	11083	1C2251	BOLT,MACHINE........................ UOC:V53	4
7	XDOZZ	70C82	5257	BRACKET ASSY........................ UOC:V53	1
7	XDOZZ	70C82	5258	BRACKET ASSY........................ UOC:V53	1
8	PAOZZ	11083	0S1591	SCREW............................... UOC:V53	12
9	XDOZZ	70C82	5261	BRACKET ASSY........................ UOC:V53	1
9	XDOZZ	70C82	5262	BRACKET ASSY........................ UOC:V53	1
10	PAOZZ	70C82	2296	MIRROR ASSEMBLY,REA................. UOC:V53	2

END OF FIGURE

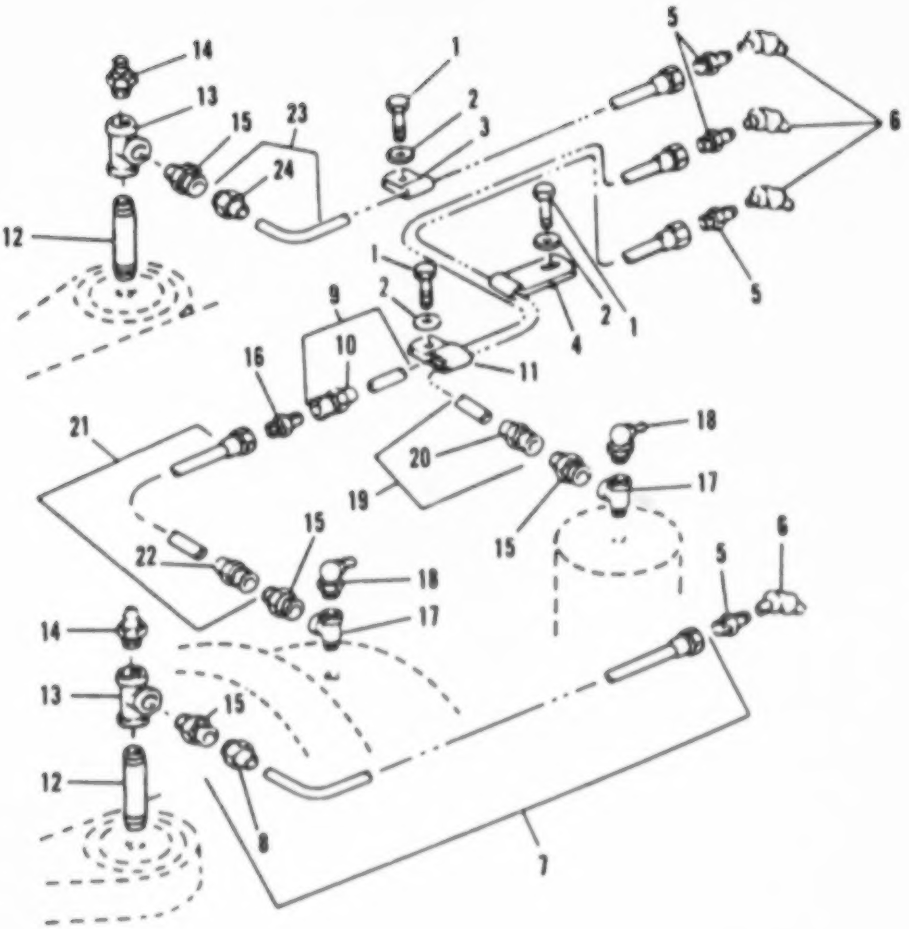

FIGURE 185. REMOTE GREASE LINES

SECTION II

(1) ITEM NO	(2) SMR CODE	(3) CAGE	(4) PART NUMBER	(5) DESCRIPTION AND USABLE ON CODES (UOC)	(6) QTY
				GROUP 2202: ACCESSORY ITEMS	
				FIG. 185 REMOTE GREASE LINES	
1	PAOZZ	11083	4F4879	BOLT, MACHINE UOC: V53	6
2	PFOZZ	11083	4B4278	WASHER,FLAT UOC: V53	6
3	PAOZZ	11083	2B2404	CLIP, ELECTRICAL UOC: V53	4
4	PAOZZ	11083	3P9200	CLAMP,LOOP UOC: V53	2
5	PAOZZ	79470	48X4	ADAPTER,STRAIGHT,PI UOC: V53	4
7	PAOFF	11083	2V6240	TUBE ASEMBLY,METAL UOC: V53	1
8	PAOZZ	11083	3B9391	.NUT,TUBE COUPLING UOC:V53	2
9	XDOFF	11083	2V6241	TUBE ASSY UOC: V53	1
10	PAOZZ	11083	3B9391	.NUT,TUBE COUPLING UOC: V53	2
11	PAOZZ	30966	BDT–413	CLAMP,LOOP UOC: V53	1
12	PBOZZ	11083	3B7733	NIPPLE,PIPE UOC: V53	2
13	PAOZZ	11083	5P3741	TEE,PIPE UOC: V53	2
14	PAOZZ	96906	MS15003–1	FITTING,LUBRICATION UOC: V53	2
15	XDOZZ	79470	131–01003	CONNECTOR,BALL CHK UOC: V53	4
16	PAOZZ	84147	L10993–2	NIPPLE,TUBE UOC: V53	1
17	XDOZZ	11083	5P3422	TEE,PIPE UOC:V53	2
18	PAOZZ	96906	MS15003–6	FITTING,LUBRICATION UOC: V53	2
19	XBOZZ	11083	2V2637	TUBE ASSY UOC: V53	1
20	PAOZZ	11083	3B9391	.NUT,TUBE COUPLING UOC: V53	2
21	XDOFF	11083	2V6239	TUBE ASSY UOC: V53	1
22	PAOZZ	11083	3B9391	.NUT,TUBE COUPLING UOC: V53	2
23	XDOFF	11083	2V6238	TUBE ASSY UOC: V53	1
24	PAOZZ	11083	3B9391	.NUT,TUBE COUPLING UOC: V53	2

END OF FIGURE

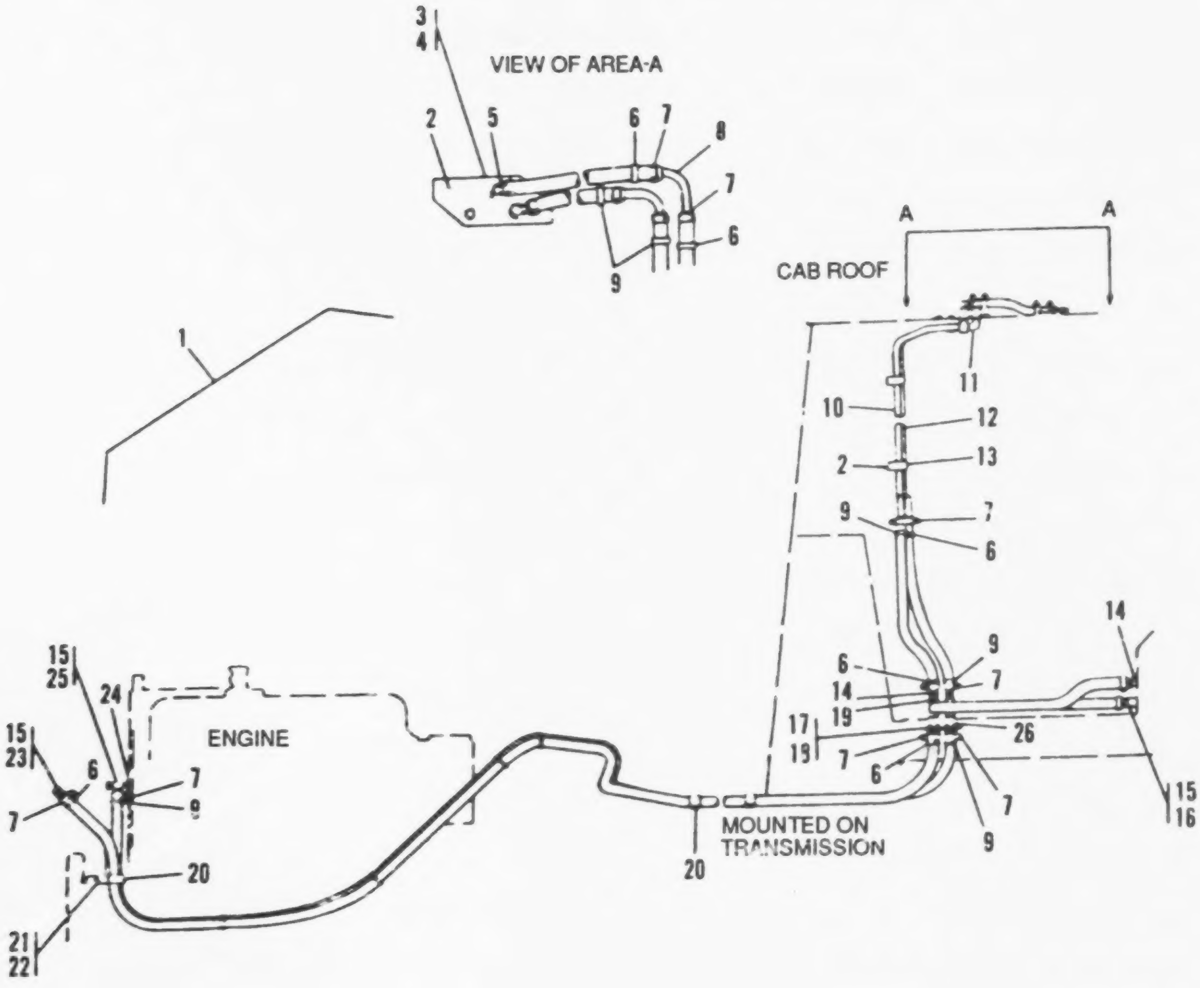

FIGURE 186. CAB HEATER LINES

(1) ITEM NO	(2) SMR CODE	(3) CAGEC	(4) PART NUMBER	(5) DESCRIPTION AND USABLE ON CODES(UOC)	(6) QTY
				GROUP 2202: ACCESSORY ITEMS	
				FIG. 186 CAB HEATER LINES	
1	XDOOO	11083	5V5926	LINES GRP,HEATER...................... UOC:V53	1
2	PAOZZ	11083	0L1351	.BOLT,MACHINE........................ UOC:V53	8
3	XDOZZ	11083	2V3987	.PLATE ASSY.......................... UOC:V53	1
4	XDOZZ	11083	2V3989	.GASKET.............................. UOC:V53	1
5	XDOZZ	11083	3K7928	.FITTING............................. UOC:V53	2
6	XDOZZ	11083	1V1123	.TAG................................. UOC:V53	7
7	PBOZZ	66295	10H	.CLAMP,HOSE.......................... UOC:V53	22
8	PBOZZ	11083	1P3956	.TUBE,BENT,METALLIC.................. UOC:V53	2
9	XDOZZ	11083	1V1122	.TAG................................. UOC:V53	7
10	XDOOO	11083	2V3581	.TUBE ASSY........................... UOC:V53	1
11	XDOZZ	11083	62325	.ELBOW............................... UOC:V53	2
12	XDOOO	11083	2V3582	.TUBE ASSY........................... UOC:V53	1
13	XDOOO	11083	5J7306	.CLIP................................ UOC:V53	2
14	PAOZZ	30327	KF10-06PS	.ADAPTER,STRAIGHT,PI................. UOC:V53	7
15	PBOZZ	11083	8F8151	.COCK,DRAIN.......................... UOC:V53	3
16	PAOZZ	7864C	32143	.ELBOW,PIPE.......................... UOC:V53	3
17	XDOZZ	11083	2V9826	.PLATE ASSY.......................... UOC:V53	1
18	PAOZZ	11083	2V7869	.GASKET.............................. UOC:V53	1
19	PAOZZ	11083	8L6005	.TEE,PIPE............................ UOC:V53	2
20	PBOZZ	11083	6D1641	.CLIP................................ UOC:V53	3
21	PAOZZ	96906	MS90728-63	.SCREW,CAP,HEXAGON H................. UOC:V53	1
22	PAOZZ	11083	6B933	.SPACER,SLEEVE....................... UOC:V53	1
23	PFOZZ	30780	3/4X318PTR-S	.BUSHING,PIPE........................ UOC:V53	1
24	XDOZZ	11083	3B7289	.NIPPLE.............................. UOC:V53	1

(1) ITEM NO	(2) SMR CODE	(3) CAGEC	(4) PART NUMBER	(5) DESCRIPTION AND USABLE ON CODES(UOC)	(6) QTY
25	PBOZZ	11083	3B7255	.BUSHING,PIPE......................... UOC:V53	1
26	PAOZZ	96906	MS18154-58	.SCREW,CAP,HEXAGON H.................. UOC:V53	2

END OF FIGURE

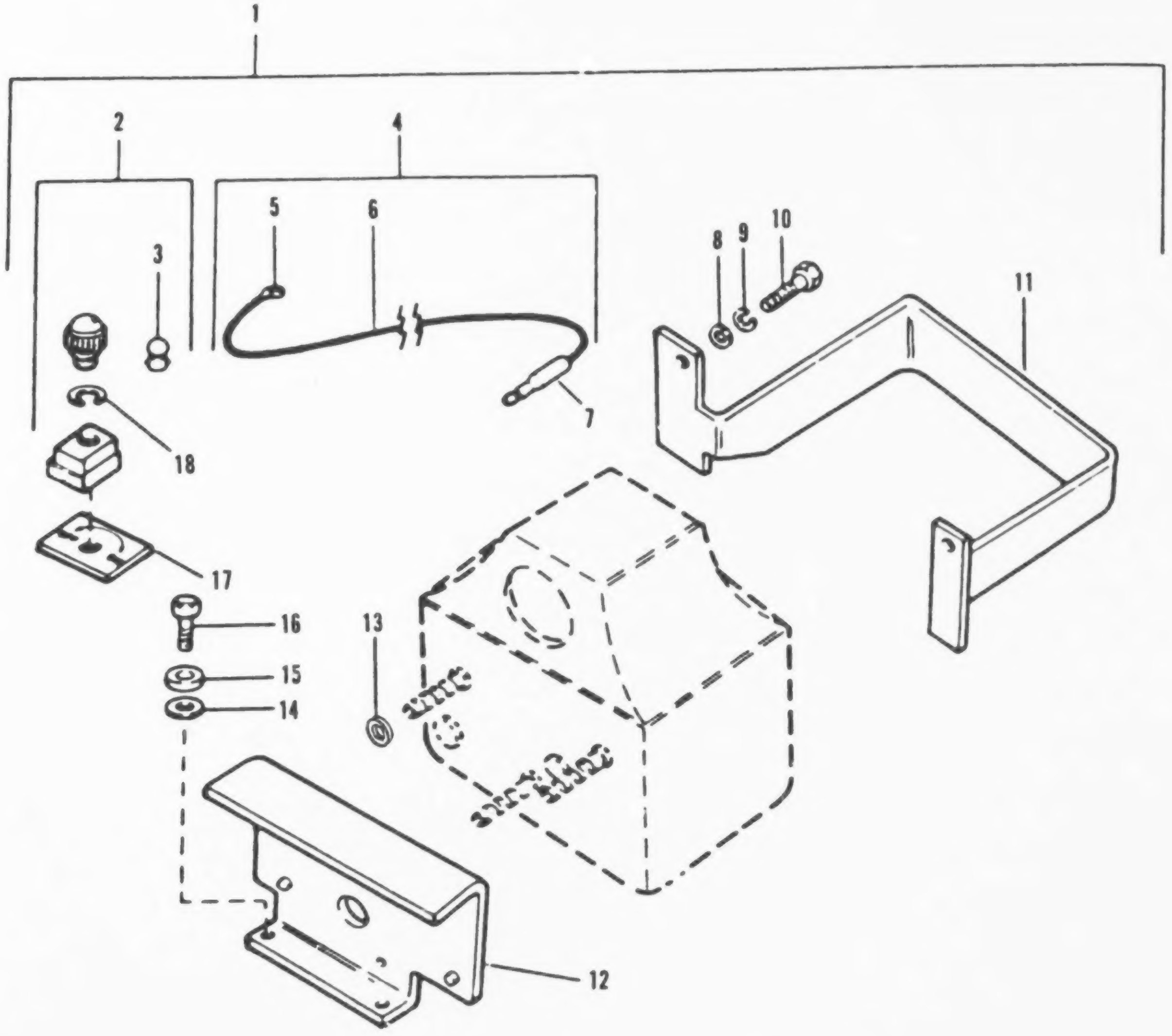

FIGURE 187. CAB HEATER ASSEMBLY (HEATER GROUP)

(1) ITEM NO	(2) SMR CODE	(3) CAGEC	(4) PART NUMBER	(5) DESCRIPTION AND USABLE ON CODES(UOC)	(6) QTY
				GROUP 2202: ACCESSORY ITEMS	
				FIG. 187 CAB HEATER ASSEMBLY (HEATER GROUP)	
1	XDOOO	12662	S854-016	HEATER,GRP,CAB.......................... UOC:V53	1
2	XDOOO	11083	7N5329	.SWITCH,HEATER.......................... UOC:V53	1
3	PAOZZ	11083	5D0019	..BULB.................................. UOC:V53	1
4	MOOOO	11083	2V9827	.WIRE ASSY MAKE FROM WIRE P/N 5P648 UOC:V53	1
5	PAOZZ	11083	2L8074	..TERMINAL,LUG.......................... UOC:V53	1
6	PFOZZ	81349	M22759/11-16-0	..WIRE,ELECTRICAL....................... UOC:V53	1
7	PAOZZ	79550	11722	..CONNECTOR,PLUG,ELEC................... UOC:V53	1
8	PAOZZ	96906	MS27183-10	.WASHER,FLAT............................ UOC:V53	2
9	XDOZZ	83355	1-4INNVYLKWASH	.WASHER,LOCK............................ UOC:V53	2
10	PAOZZ	11083	S1615	.BOLT,MACHINE........................... UOC:V53	2
11	XDOZZ	11083	2V3631	.PLATE.................................. UOC:V53	1
12	XDOZZ	11083	2V3629	.PLATE ASSY............................. UOC:V53	1
13	PAOZZ	11083	5M5693	.WASHER,FLAT............................ UOC:V53	3
14	PFOZZ	11083	4B4278	.WASHER,FLAT............................ UOC:V53	2
15	PAOZZ	11083	5P1075	.WASHER,SQUARE CONE..................... UOC:V53	2
16	PAOZZ	11083	0S1594	.BOLT,MACHINE........................... UOC:V53	2
17	XDOZZ	71741	14-11	.PLATE,SWITCH........................... UOC:V53	1
18	PFOZZ	11083	6F0253	.LOCKWASHER............................. UOC:V53	1

END OF FIGURE

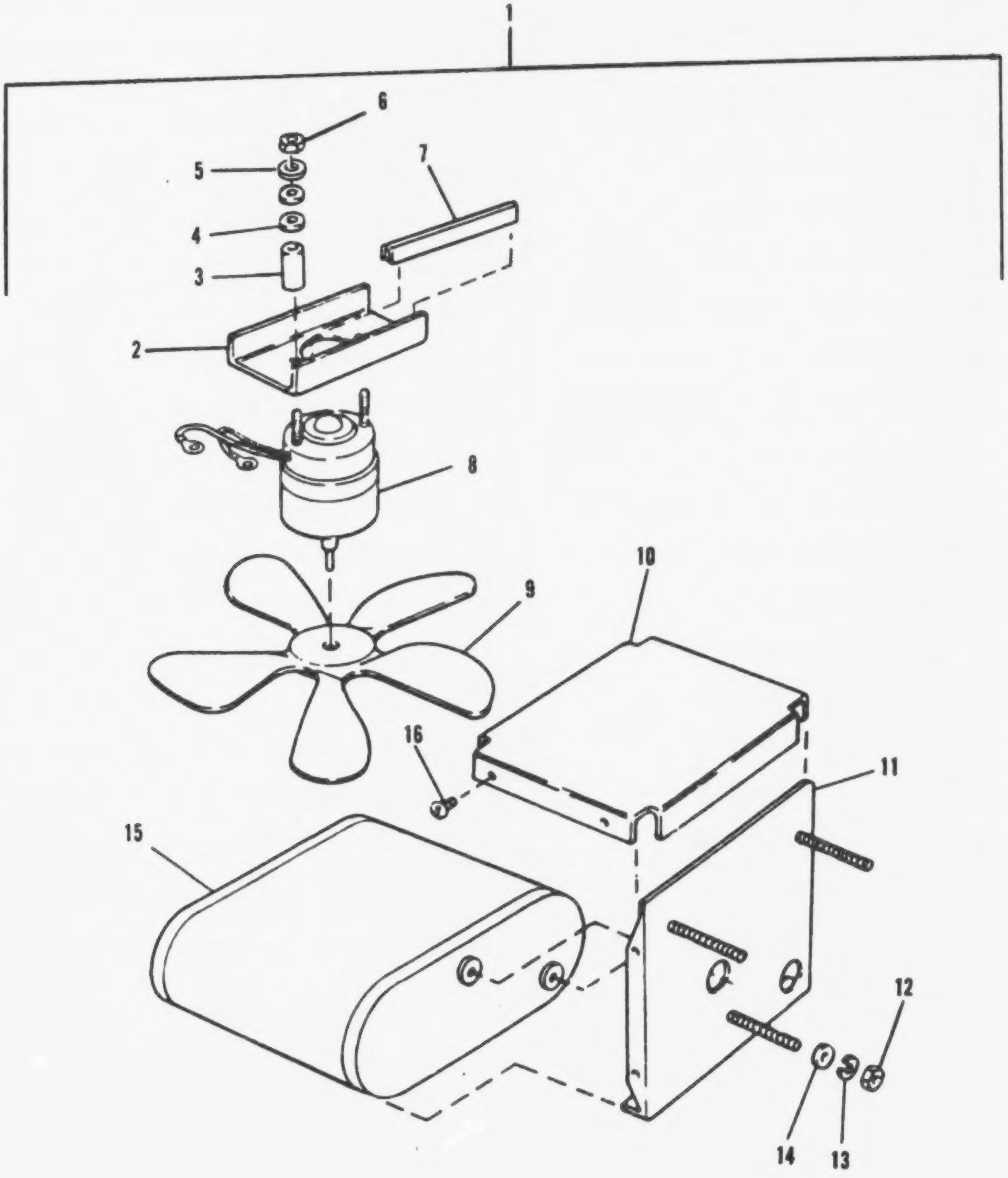

FIGURE 188. CAB HEATER ASSEMBLY (HEATER GROUP, FAN)

(1) ITEM NO	(2) SMR CODE	(3) CAGEC	(4) PART NUMBER	(5) DESCRIPTION AND USABLE ON CODES(UOC)	(6) QTY
				GROUP 2202: ACCESSORY ITEMS	
				FIG. 188 CAB HEATER ASSEMBLY (HEATER GROUP, FAN)	
1	XDOFF	11083	2V9911	.HEATER GRP........................ UOC:V53	1
2	XBOZZ	11083	8F6321	..BRACKET.......................... UOC:V53	1
3	XBOZZ	71741	9-12	..SPACER........................... UOC:V53	2
4	PAOZZ	11083	8F6324	..GROMMET,NONMETALLIC.............. UOC:V53	2
5	PAOZZ	11083	9M2307	..WASHER,FLAT...................... UOC:V53	4
6	PAOZZ	72962	29M-82	..NUT,PLAIN,HEXAGON................ UOC:V53	2
7	XBOZZ	71741	24-30B	..CHANNEL,RUBBER................... UOC:V53	1
8	XBOZZ	71741	7-40	..MOTOR,HEATER..................... UOC:V53	1
9	XBOZZ	11083	7K1742	..FAN,HEATER....................... UOC:V53	1
10	XBOZZ	71741	5-10	..SHROUD,FAN....................... UOC:V53	1
11	XBOZZ	71741	4-10	..PLATE ASSY....................... UOC:V53	1
12	PAOZZ	23040	33797S36	..NUT,PLAIN,HEXAGON................ UOC:V53	3
13	PAOZZ	96906	MS35338-45	..WASHER,LOCK...................... UOC:V53	3
14	PFOZZ	11083	4B4278	..WASHER,FLAT...................... UOC:V53	3
15	XBOZZ	71741	15-35	..CORE,HEATER...................... UOC:V53	1
16	PAOZZ	96906	MS51861-34	..SCREW,TAPPING,THREA.............. UOC:V53	8

END OF FIGURE

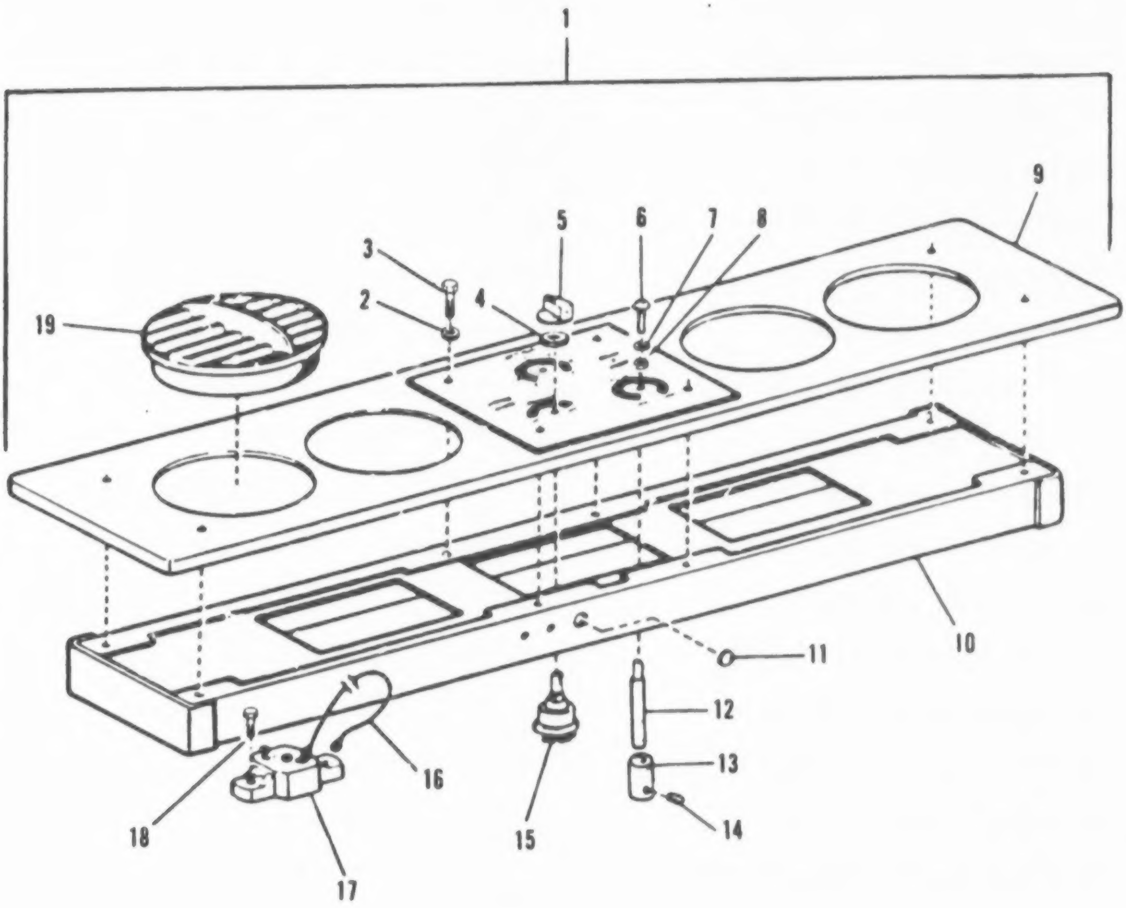

FIGURE 189. AIR CONSOLE ASSEMBLY

GROUP 2202: ACCESSORY ITEMS

FIG. 189 AIR CONSOLE ASSEMBLY

(1) ITEM NO	(2) SMR CODE	(3) CAGEC	(4) PART NUMBER	(5) DESCRIPTION AND USABLE ON CODES(UOC)	(6) QTY
1	XDOOO	11083	6P2016	CONSOLE GRP,CONTROL.................. UOC:V53	1
2	PAOZZ	75418	3058-00843-06	.WASHER,FLAT...................... UOC:V53	8
3	PAOZZ	96906	MS90728-5	.SCREW,CAP,HEXAGON H.............. UOC:V53	8
4	XDOZZ	94364	100056-8	.NUT,JAM.......................... UOC:V53	1
5	XDOZZ	94364	2-17958	.KNOB............................. UOC:V53	2
6	PAOZZ	11083	4S4465	.SCREW,MACHINE.................... UOC:V53	1
7	PAOZZ	96906	MS27183-10	.WASHER,FLAT...................... UOC:V53	1
8	PAOZZ	24617	426376	.NUT,PLAIN,HEXAGON................ UOC:V53	1
9	XDOZZ	94364	2-17954	.COVER ASSY....................... UOC:V53	1
10	XDOZZ	94364	2-18665	.DUCT............................. UOC:V53	1
11	PBOZZ	61864	SS-51156	.BUTTON,PLUG...................... UOC:V53	1
12	PAOZZ	11083	6P5285	.ROD.............................. UOC:V53	1
13	PAOZZ	94364	2-18232	.SPACER,SLEEVE.................... UOC:V53	1
14	PAOZZ	11083	3H1118	.PIN.............................. UOC:V53	2
15	PAOZZ	11083	6P3236	.SWITCH,ROTARY.................... UOC:V53	1
16	XDOZZ	11083	1P5304	.WIRE,ASSY........................ UOC:V53	1
17	PBOZZ	11083	1N9770	.CIRCUIT BREAKER.................. UOC:V53	1
18	PAOZZ	11083	5M6668	.SCREW,MACHINE.................... UOC:V53	2
19	PFOZZ	11083	6P1316	.LOUVER ASSEMBLY.................. UOC:V53	4

END OF FIGURE

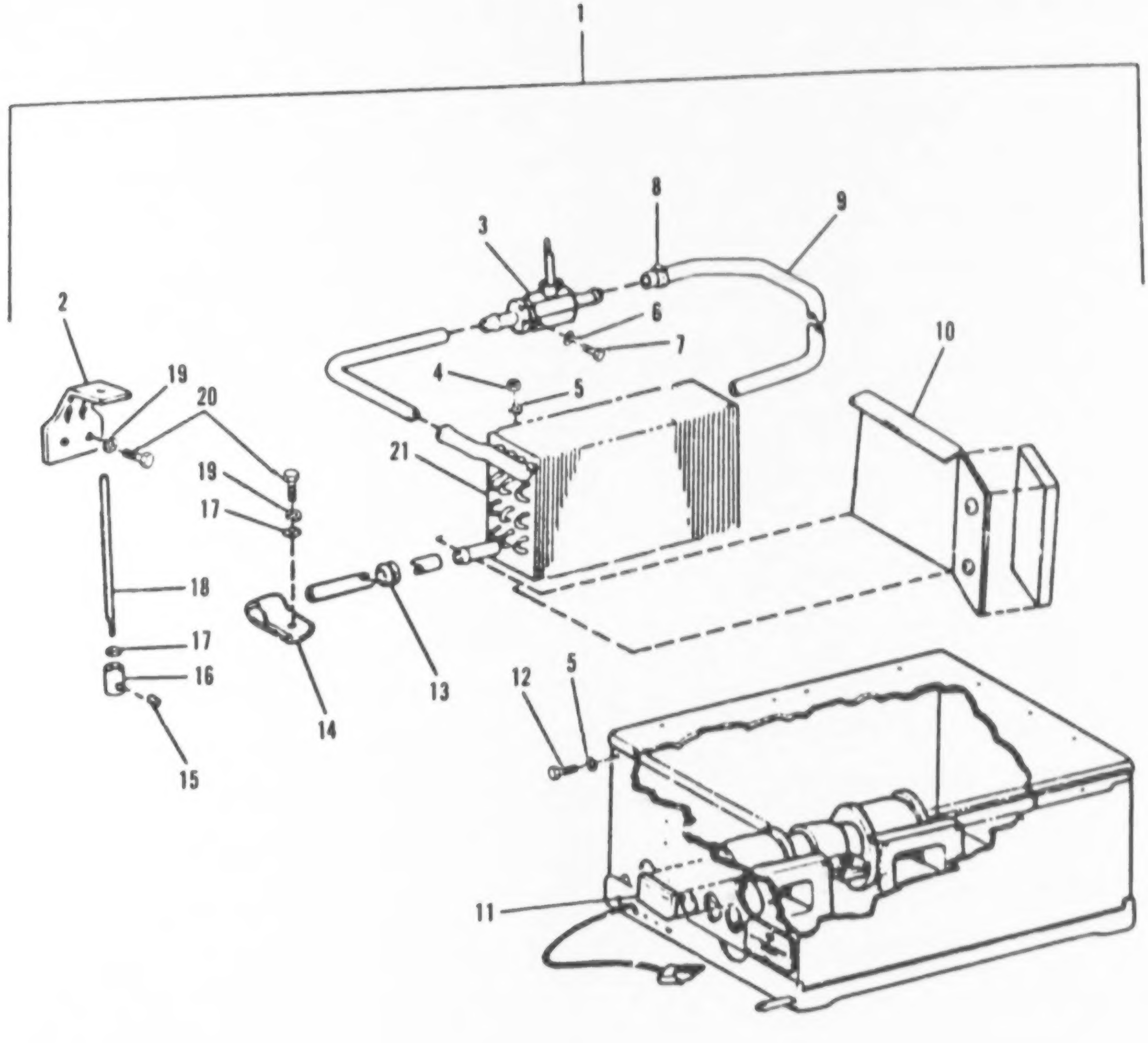

FIGURE 190. CAB HEATER

(1) ITEM NO	(2) SMR CODE	(3) CAGEC	(4) PART NUMBER	(5) DESCRIPTION AND USABLE ON CODES(UOC)	(6) QTY
				GROUP 2202: ACCESSORY ITEMS	
				FIG. 190 CAB HEATER	
1	XDOFF	94364	2-18C53	HEATER GRP........................... UOC:V53	1
2	PAOZZ	11083	9GC931	.BRACKET,DOUBLE ANGL................ UOC:V53	1
3	XDOZZ	94364	C-1-3589	.VALVE,WATER........................ UOC:V53	1
4	PAOZZ	15564	1377A	.NUT,PLAIN,HEXAGON.................. UOC:V53	2
5	PAOZZ	96906	MS35338-45	.WASHER,LOCK........................ UOC:V53	6
6	PAOZZ	11083	8F1434	.WASHER,LOCK........................ UOC:V53	2
7	PAOZZ	11083	2L5317	.SCREW,MACHINE...................... UOC:V53	2
8	XDFZZ	80254	STD1640	.CLAMP,HOSE......................... UOC:V53	4
9	XDOZZ	94364	2-17937	.HOSE,HEATER........................ UOC:V53	1
10	XDOZZ	94364	2-1855	.BAFFLE ASSY........................ UOC:V53	1
11	PAOZZ	11083	5P6670	.MARKER,IDENTIFICATI................ UOC:V53	1
12	PAOZZ	96906	MS18154-58	.SCREW,CAP,HEXAGON H................ UOC:V53	4
13	PAOZZ	11083	8P5348	.GROMMET,NONMETALLIC................ UOC:V53	2
14	PAOZZ	11083	1S724	.CLIP............................... UOC:V53	1
15	PAOZZ	11083	3H1118	.PIN................................ UOC:V53	2
16	PFOZZ	94364	2-18231	.SPACER,SLEEVE...................... UOC:V53	1
17	PAOZZ	96906	MS90728-5	.SCREW,CAP,HEXAGON H................ UOC:V53	1
18	XDOZZ	94364	2-18233	.ROD................................ UOC:V53	1
19	PAOZZ	11083	3B4504	.WASHER, LOCK....................... UOC:V53	2
20	PAOZZ	96906	MS90728-5	.SCREW,CAP,HEXAGON H................ UOC:V53	2
21	PBOZZ	11083	3P7993	.COIL, HEATER....................... UOC:V53	1

END OF FIGURE

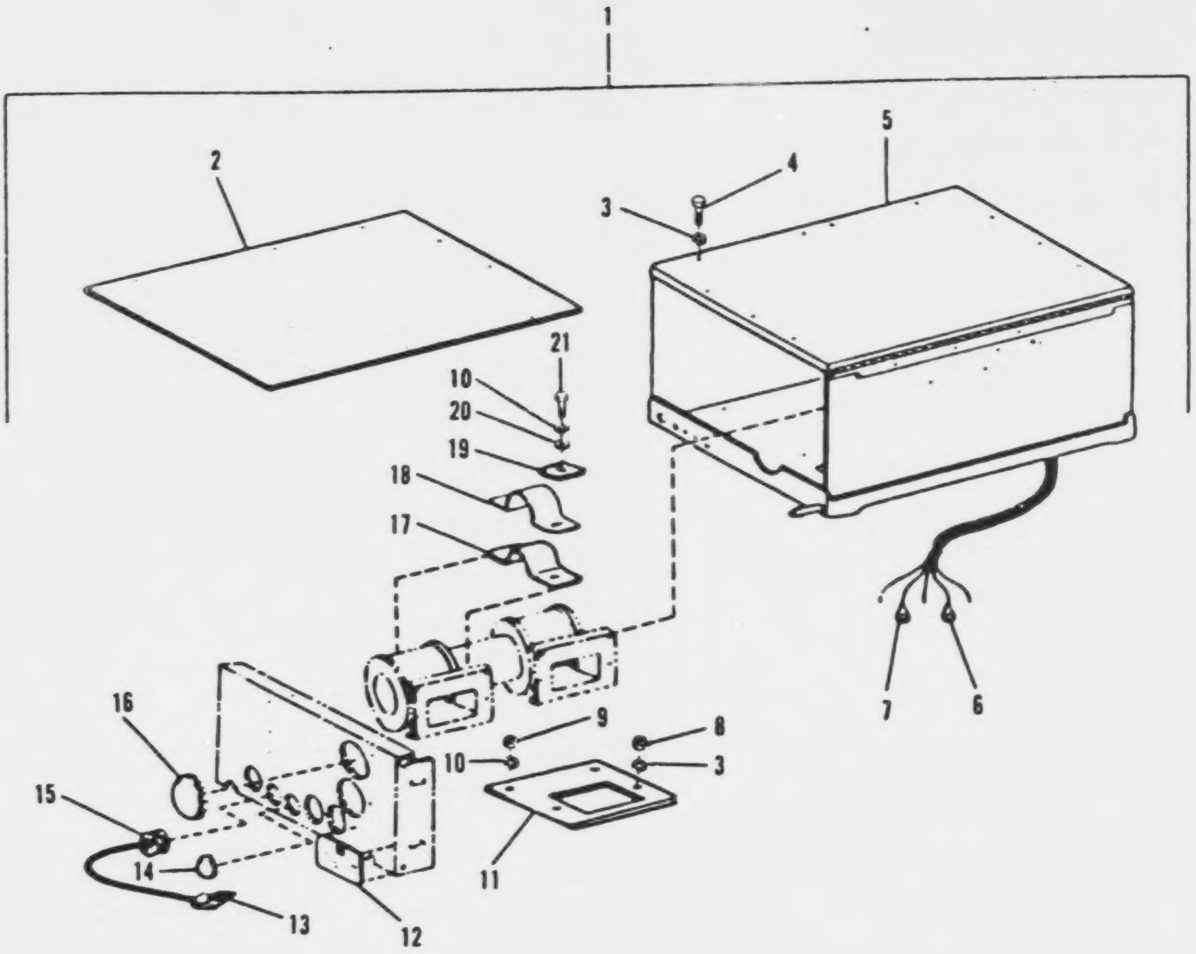

FIGURE 191. CAB HEATER BLOWER ASSEMBLY

(1) ITEM NO	(2) SMR CODE	(3) CAGEC	(4) PART NUMBER	(5) DESCRIPTION AND USABLE ON CODES(UOC)	(6) QTY
				GROUP 2202: ACCESSORY ITEMS	
				FIG. 191 CAB HEATER BLOWER ASSEMBLY	
1	XDOOO	94364	2-18611	PRESSURIZER GRP..................... UOC:V53	1
2	XDOZZ	11083	8P7067	.INSULATION...................... UOC:V53	1
3	XDOZZ	83355	1-4INNVYLKWASH	.WASHER,LOCK...................... UOC:V53	4
4	PAOZZ	96906	MS90728-5	.SCREW,CAP,HEXAGON H.............. UOC:V53	10
5	XDOZZ	11083	8P7401	.CASE ASSY....................... UOC:V53	1
6	PAOZZ	96906	MS25036-156	.TERMINAL,LUG.................... UOC:V53	2
7	PAOZZ	96906	MS25036-153	.TERMINAL,LUG.................... UOC:V53	3
8	PBOZZ	24617	426376	.NUT,PLAIN,HEXAGON................ UOC:V53	4
9	PAOZZ	15564	1377A	.NUT,PLAIN,HEXAGON................ UOC:V53	4
10	PAOZZ	96906	MS35338-45	.WASHER,LOCK...................... UOC:V53	6
11	PAOZZ	11083	6P1296	.GASKET........................... UOC:V53	3
12	XDOZZ	94364	2-18557	.LABEL,I.D........................ UOC:V53	1
13	PBOZZ	11083	3S8183	.CONNECTOR........................ UOC:V53	2
14	PBOZZ	61864	SS-48165	.BUTTON,PLUG...................... UOC:V53	1
15	PAOZZ	11083	6P1301	.GROMMET.......................... UOC:V53	1
16	XDOZZ	94364	2-17927	.PLUG,BUTTON...................... UOC:V53	2
17	MOOZZ	11083	5P0878	.SEAL,RUBBER MAKE FROM SEAL P/N 5P0878............................ UOC:V53	1
18	PBOZZ	11083	6P1298	.STRAP............................ UOC:V53	1
19	PAOZZ	11083	2H4499	.LOCK,CLUTCH COLLAR............... UOC:V53	1
20	PFOZZ	11083	4B4278	.WASHER,FLAT...................... UOC:V53	1
21	PAOZZ	96906	MS18154-58	.SCREW,CAP,HEXAGON H.............. UOC:V53	2

END OF FIGURE

best copy available
Reproduced from poor document.

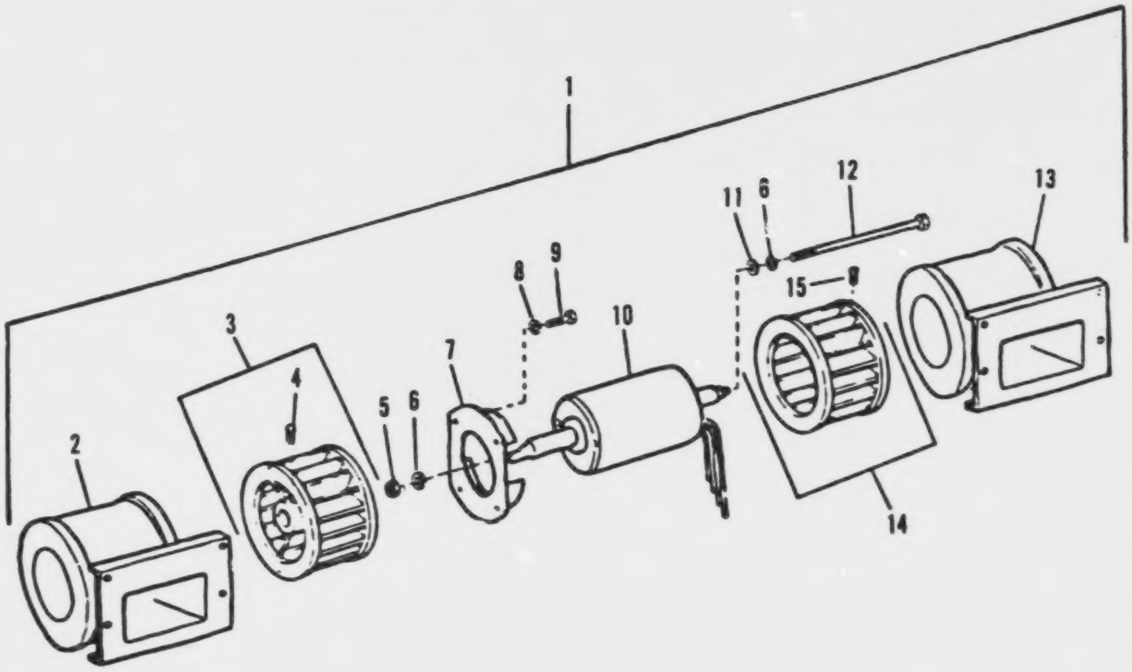

FIGURE 192. BLOWER

(1) ITEM NO	(2) SMR CODE	(3) CAGEC	(4) PART NUMBER	(5) DESCRIPTION AND USABLE ON CODES(UOC)	(6) QTY
				GROUP 2202: ACCESSORY ITEMS	
				FIG. 192 BLOWER	
1	XDFFF	94364	D-2-17928	BLOWER ASSY......................... UOC:V53	1
2	XDFZZ	94364	D-2-18490	.HOUSING ASSY....................... UOC:V53	1
3	XDOOO	94364	1-2827	.WHEEL ASSY......................... UOC:V53	1
4	PAFZZ	96906	MS51963-68	..SETSCREW.......................... UOC:V53	1
5	XDFZZ	11083	4B2049	.NUT,PLAIN,HEXAGON.................. UOC:V53	2
6	PAFZZ	96906	MS35335-32	.WASHER,LOCK........................ UOC:V53	4
7	XDFZZ	94364	C-2-15807	.PLATE,MOTOR MTG.................... UOC:V53	2
8	XDFZZ	83355	1-4INNVYLKWASH	.WASHER,LOCK........................ UOC:V53	26
9	XAFZZ	11083	S1613	.CAPSCREW, HEX HEAD................. UOC:V53	8
10	XDFFF	94364	2-17679	.MOTOR ASSY......................... UOC:V53	1
11	XDFZZ	11083	4B4274	.WASHER,FLAT........................ UOC:V53	2
12	PAFZZ	11083	8L6521	.SCREW,CAP,HEXAGON H................ UOC:V53	2
13	XDFZZ	94364	D-2-18489	.HOUSING ASSY....................... UOC:V53	1
14	XDFFF	94364	1-3059	.WHEEL ASSY......................... UOC:V53	1
15	PAFZZ	96906	MS51963-68	..SETSCREW.......................... UOC:V53	1

END OF FIGURE

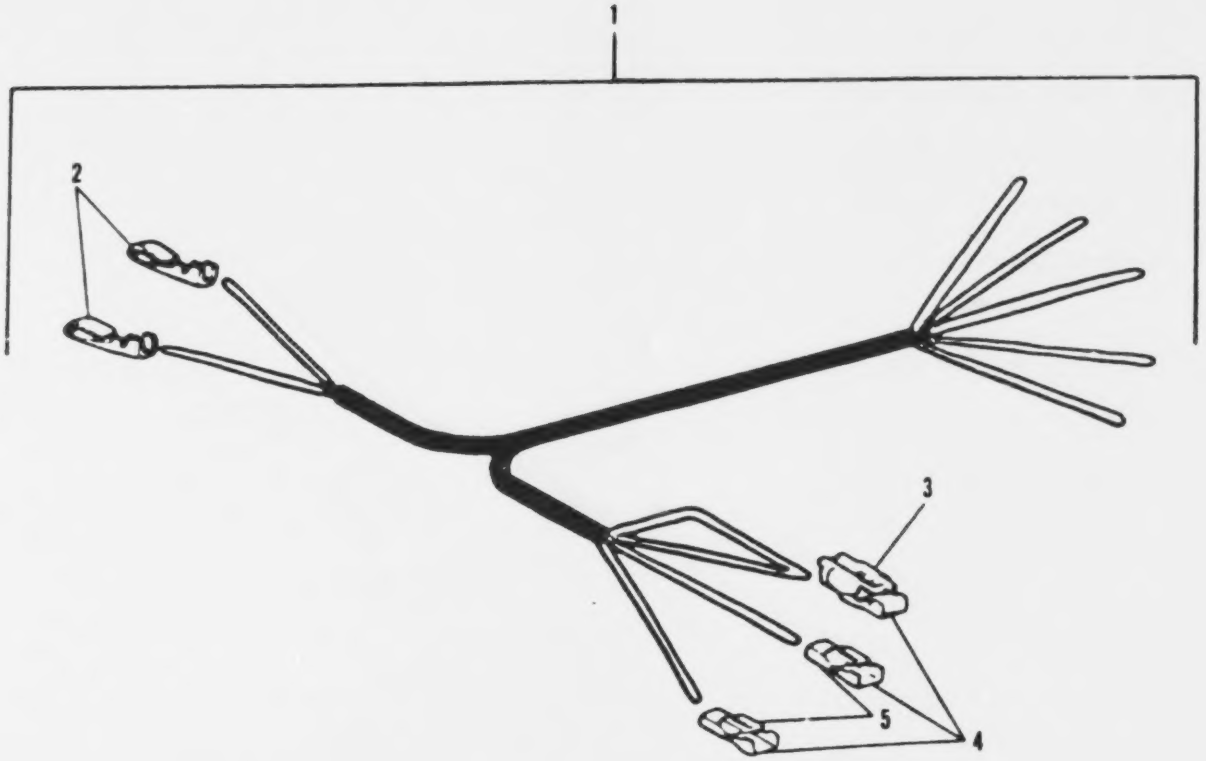

FIGURE 193. CAB HEATER HARNESS ASSEMBLY

(1) ITEM NO	(2) SMR CODE	(3) CAGEC	(4) PART NUMBER	(5) DESCRIPTION AND USABLE ON CODES(UOC)	(6) QTY
				GROUP 2202: ACCESSORY ITEMS	
				FIG. 193 CAB HEATER HARNESS ASSEMBLY	
1	XDOOO	11C83	8P1163	HARNESS,ASSY........................ UOC:V53	1
2	PAOZZ	11C83	2S5016	.TERMINAL........................... UOC:V53	2
3	XDOZZ	77060	2984646	.BODY CONNECTOR..................... UOC:V53	1
4	PAOZZ	77060	2973916	.TERMINAL........................... UOC:V53	3
5	PAOZZ	11C83	3S8183	.CONNECTOR.......................... UOC:V53	2

END OF FIGURE

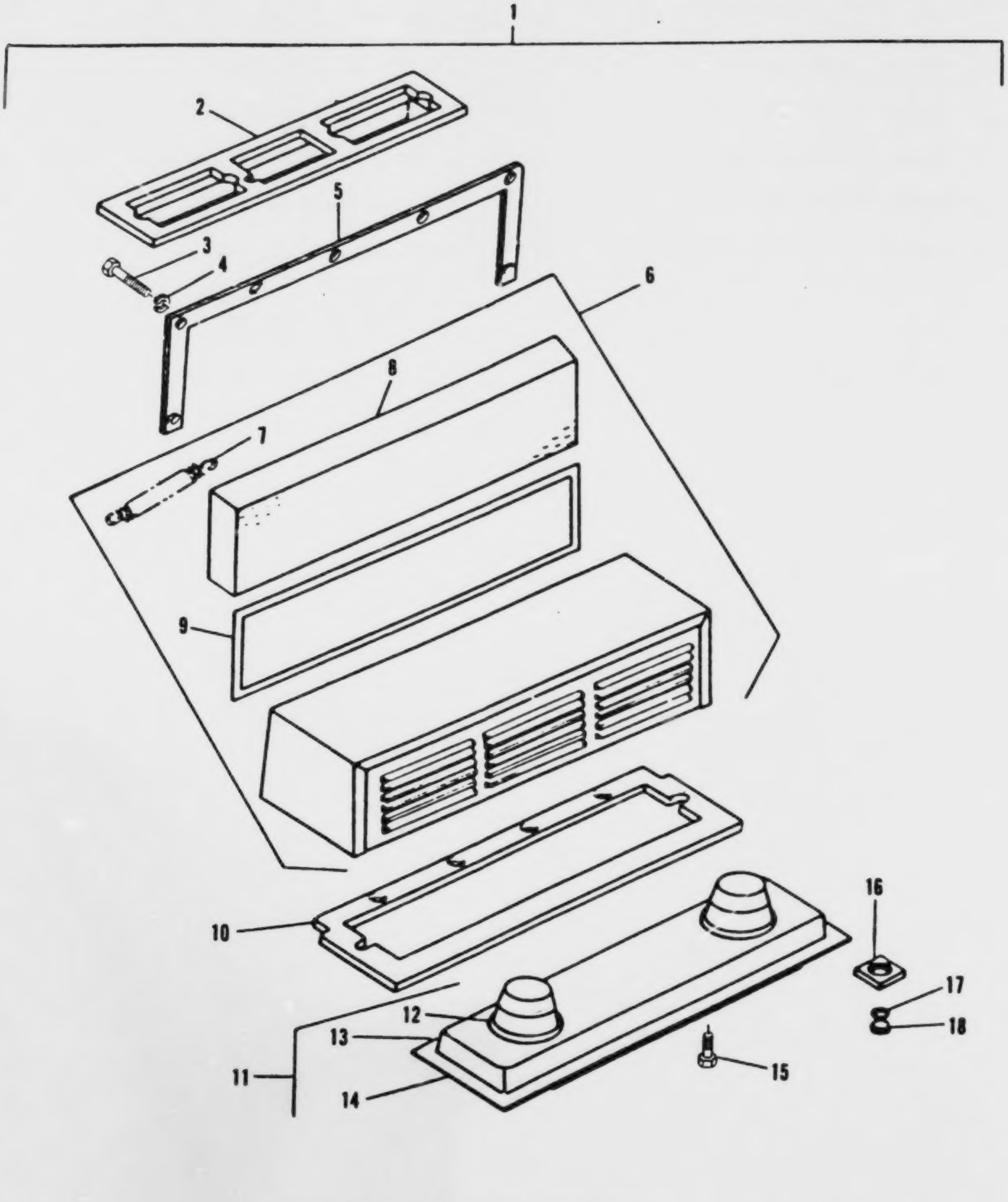

FIGURE 194. CAB AIR FILTER ASSEMBLY

(1) ITEM NO	(2) SMR CODE	(3) CAGEC	(4) PART NUMBER	(5) DESCRIPTION AND USABLE ON CODES(UOC)	(6) QTY
				GROUP 2202: ACCESSORY ITEMS	
				FIG. 194 CAB AIR FILTER ASSEMBLY	
1	AOOOO	11083	8P4732	FILTER,CAB AIR........................ UOC:V53	1
2	PAOZZ	11083	6P1286	.SEAL................................. UOC:V53	1
3	PAOZZ	96906	MS18154-58	.SCREW,CAP,HEXAGON H.............. UOC:V53	7
4	PAOZZ	96906	MS35338-45	.WASHER,LOCK.......................... UOC:V53	7
5	PAOZZ	94364	2-17925	.GASKET............................... UOC:V53	1
6	XAOZZ	11083	8P5396	.FILTER,FRESH AIR..................... UOC:V53	1
7	PAOZZ	11083	1S1790	..SPRING,HELICAL,EXTE................. UOC:V53	2
8	PAOZZ	94364	2-19479	..FILTER.............................. UOC:V53	1
9	PAOZZ	94364	B-2-19480	..SEAL,RUBBER STRIP................... UOC:V53	1
10	PAOZZ	11083	6P1285	.SEAL................................. UOC:V53	1
11	XDOOO	94364	2-17693	.CONSOLE GRP.......................... UOC:V53	1
12	PBOZZ	11083	6P1319	..FILTER ASSEMBLY..................... UOC:V53	2
13	XDOZZ	94364	2-17960	..FLANGE ASSY......................... UOC:V53	1
14	XDOZZ	94364	2-17959	..COVER ASSY.......................... UOC:V53	1
15	PAOZZ	11083	310243	.SCREW................................ UOC:V53	6
16	PFOZZ	11083	1P6500	.SEAL................................. UOC:V53	4
17	PFOZZ	11083	4B4278	.WASHER,FLAT.......................... UOC:V53	14
18	PAOZZ	11083	4J8265	.NUT,SPECIAL.......................... UOC:V53	14

END OF FIGURE

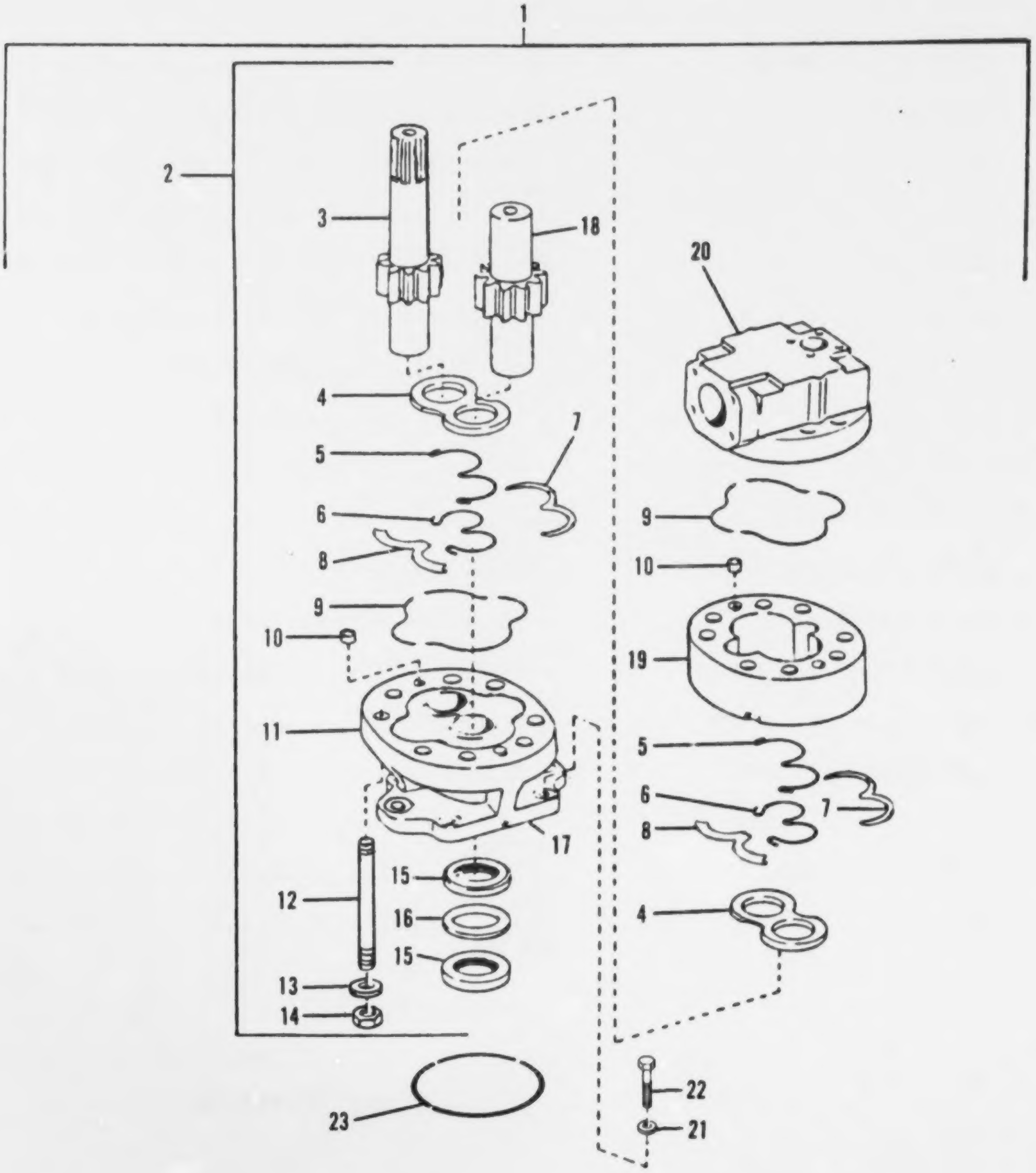

FIGURE 195. HYDRAULIC IMPLEMENT PUMP ASSEMBLY

(1) ITEM NO	(2) SMR CODE	(3) CAGEC	(4) PART NUMBER	(5) DESCRIPTION AND USABLE ON CODES(UOC)	(6) QTY
				GROUP 24: HYDRAULIC LIFT COMPONENTS	
				GROUP 2401: HYDRAULIC PUMP	
				FIG. 195 HYDRAULIC IMPLEMENT PUMP ASSEMBLY	
1	XBFHH	11083	5R4477	PUMP GRP.............................. UOC:V53	1
2	XBFFF	11671	49681	.PUMP GRP,IMPLEMENT................... UOC:V53	1
3	XBHZZ	11671	25562	..DRIVER GEAR......................... UOC:V53	1
4	XBHZZ	11671	24248	..PRESSURE PLATE...................... UOC:V53	2
5	PAHZZ	11671	25792	..SEAL,NONMETALLIC RO................. UOC:V53	2
6	XBHZZ	11671	25372	..BACK-UP RING........................ UOC:V53	2
7	XBHZZ	11671	24986	..RING RETAINER....................... UOC:V53	2
8	XBHZZ	11671	24985	..ISOLATION PLATE..................... UOC:V53	2
9	PAHZZ	02697	2-256V709-90	PACKING,PREFORMED..................... UOC:V53	2
10	XDFZZ	11671	20-16KH3390	..PIN,STR,HDLS........................ UOC:V53	4
11	XBFZZ	11671	49679	..FLANGE.............................. UOC:V53	1
12	XBHZZ	11671	13807	..STUD................................ UOC:V53	8
13	PAHZZ	11671	12875	..WASHER,FLAT......................... UOC:V53	8
14	PAHZZ	84247	HR12	..NUT,PLAIN,HEXAGON................... UOC:V53	8
15	PAHZZ	11083	3G1797	..SEAL, PLAIN ENCASED.................	2
16	XBFZZ	11671	12989	..SPACER.............................. UOC:V53	1
17	PFHZZ	11671	15587	..VALVE,SAFETY RELIEF................. UOC:V53	2
18	XBHZZ	11671	25297	..IDLER GEAR.......................... UOC:V53	1
19	XBHZZ	11671	32719	..GEAR PLATE.......................... UOC:V53	1
20	XBFZZ	11671	49680	..COVER PLATE......................... UOC:V53	1
21	PAHZZ	11083	4D3704	WASHER,FLAT........................... UOC:V53	2
22	PAHZZ	96906	MS90728-163	SCREW,CAP,HEXAGON H................... UOC:V53	2
23	PAHZZ	11083	5F3106	PACKING,PREFORMED..................... UOC:V53	1

END OF FIGURE

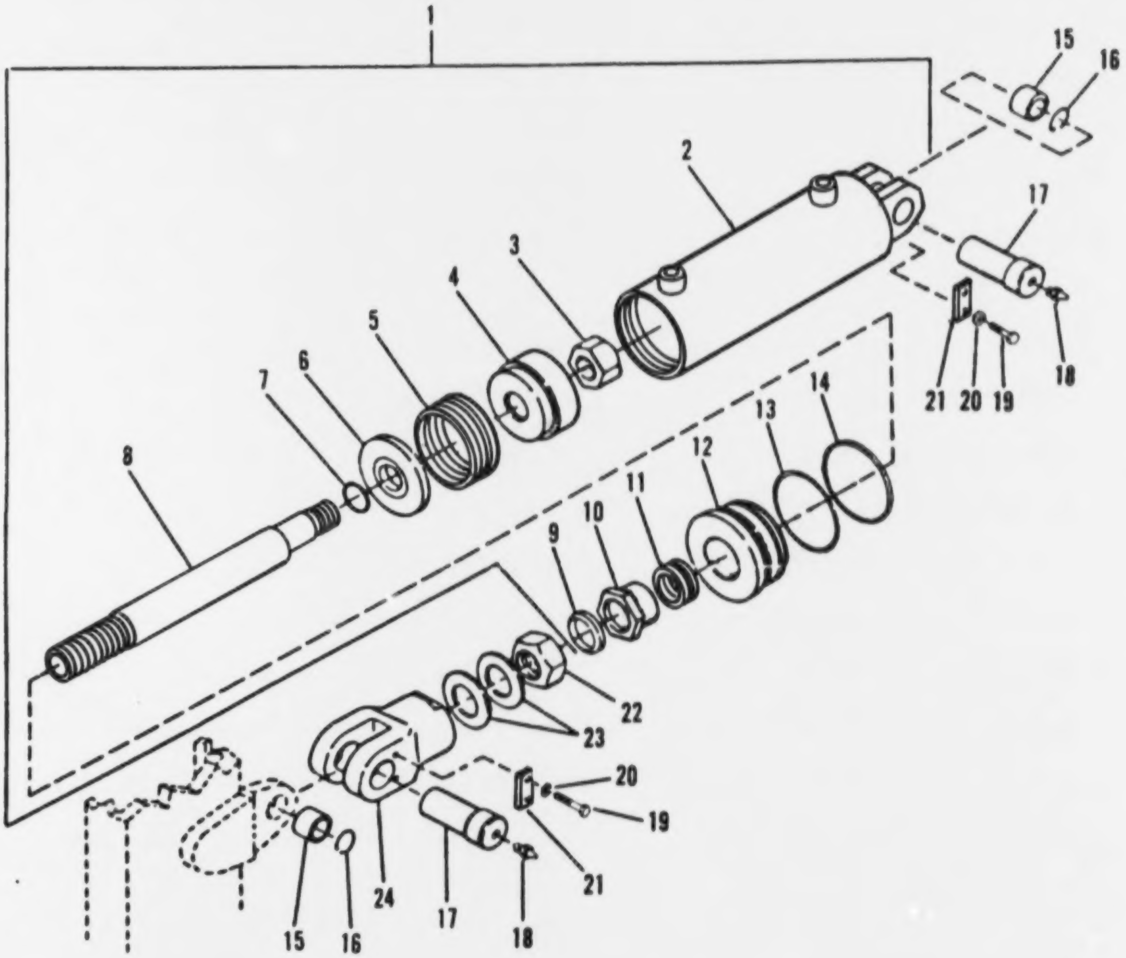

FIGURE 196. TILT CYLINDER ASSEMBLY

(1) ITEM NO	(2) SMR CODE	(3) CAGEC	(4) PART NUMBER	(5) DESCRIPTION AND USABLE ON CODES(UOC)	(6) QTY
				GROUP 2404: HYDRAULIC TILT CYLINDERS AND TILT CRANK	
				FIG. 196 TILT CYLINDER ASSEMBLY	
1	XDFFF	11083	537664	CYLINDER ASSEMBLY,A................. UOC:V53	2
2	PAFZZ	11083	537665	.CYLINDER ASSEMBLY,A................ UOC:V53	1
3	XDFZZ	82156	49NU3212	.NUT,LOCK........................... UOC:V53	1
4	XDFZZ	11083	688340	.PISTON............................. UOC:V53	1
5	PAFZZ	11083	659454	.PACKING,CYLINDER................... UOC:V53	3
6	XDFZZ	11083	670902	.SPACER............................. UOC:V53	1
7	PAFZZ	11083	6L1651	.PACKING,PREFORMED.................. UOC:V53	1
8	XDFZZ	11083	537663	.ROD,CYL PISTON..................... UOC:V53	1
9	XDFZZ	81168	7580-20681	.RING,WIPER......................... UOC:V53	1
10	XDFZZ	53930	C-657971	.NUT,PACKING,GUIDE.................. UOC:V53	1
11	PAFZZ	11083	618146	.PACKING ASSEMBLY................... UOC:V53	1
12	XDFZZ	11083	665947	.CAP,END............................ UOC:V53	1
13	PAFZZ	11083	657978	.PACKING,PREFORMED.................. UOC:V53	1
14	PAFZZ	11083	2D1692	.PACKING,PREFORMED.................. UOC:V53	1
15	XDFZZ	27737	GZ2540	BEARING,SPHER....................... UOC:V53	4
16	PAFZZ	80756	RRT-393	RING,RETAINING...................... UOC:V53	4
17	XDFZZ	11083	665808	PIN,TILT CYL........................ UOC:V53	4
18	PAFZZ	95879	16138	FITTING,LUBRICATION................. UOC:V53	4
19	PAFZZ	11083	0S1594	BOLT,MACHINE........................ UOC:V53	8
20	PAFZZ	11083	5M2894	WASHER,FLAT......................... UOC:V53	8
21	PAFZZ	11083	646059	SPACER,PLATE........................ UOC:V53	4
22	XDFZZ	11083	670407	NUT,HEX,JAM......................... UOC:V53	2
23	XDFZZ	11083	657833	WASHER,TILT CYL..................... UOC:V53	2
24	XDFZZ	11083	665736	CLEVIS..............................	2

(1) ITEM NO	(2) SMR CODE	(3) CAGEC	(4) PART NUMBER	(5) DESCRIPTION AND USABLE ON CODES(UOC)	(6) QTY
				UOC:V53	

END OF FIGURE

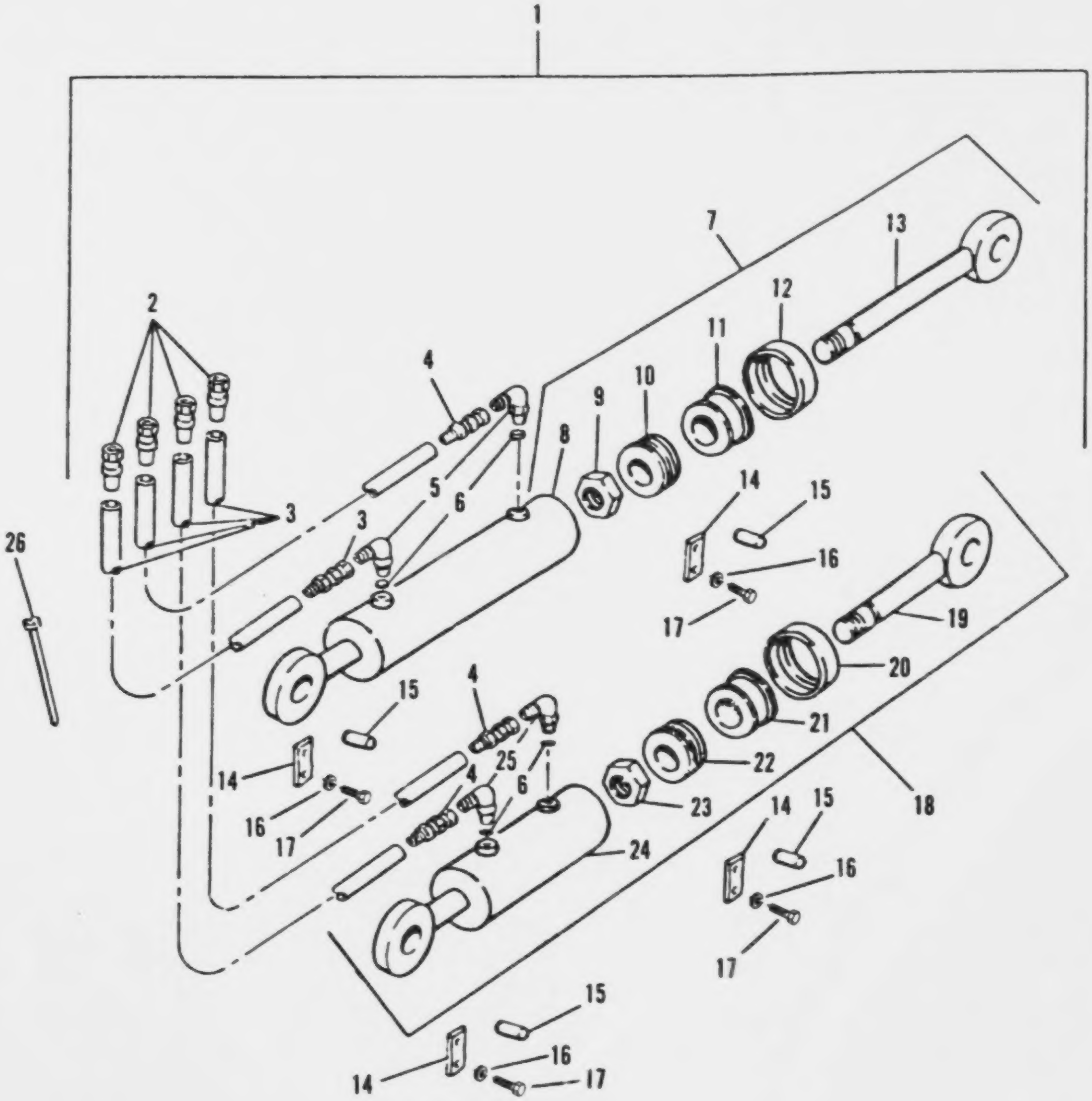

FIGURE 197. SIDE SHIFT AND SIDE TILT CYLINDERS

(1) ITEM NO	(2) SMR CODE	(3) CAGEC	(4) PART NUMBER	(5) DESCRIPTION AND USABLE ON CODES(UOC)	(6) QTY
				GROUP 2404: HYDRAULIC TILT CYLINDERS AND TILT CRANK	
				FIG. 197 SIDE SHIFT AND SIDE TILT CYLINDERS	
1	XDFFF	11083	537765	LINES GRP,ATTACH SE.................. UOC:V53	1
2	XDFZZ	11083	690478	.COUPLING........................... UOC:V53	4
3	XAFZZ	11083	5P2298	.HOSE............................... UOC:V53	3
4	XAFZZ	11083	692306	.FITTING............................ UOC:V53	4
5	PFFZZ	11083	6BC689	.PLUG,PIPE.......................... UOC:V53	2
6	PAFZZ	81349	M83248/2-910	.PACKING,PREFORMED.................. UOC:V53	4
7	PFFZZ	11083	537495	.CYLINDER ASSEMBLY,A................ UOC:V53	1
8	XDFZZ	07742	4459-02	..BARREL ASSY....................... UOC:V53	1
9	XDFZZ	11083	691262	..NUT............................... UOC:V53	1
10	XBFZZ	07742	238-06	..PISTON............................ UOC:V53	1
11	XDFZZ	11083	694531	..GLAND............................. UOC:V53	1
12	XDFZZ	11083	690256	..COLLAR............................ UOC:V53	1
13	XDFZZ	07742	4459-18	..ROD ASSY.......................... UOC:V53	1
14	XBFZZ	11083	640109	.RETAINER........................... UOC:V53	4
15	XBFZZ	11083	537557	.PIN................................ UOC:V53	4
16	PAFZZ	11083	9M1974	.WASHER,FLAT........................ UOC:V53	8
17	PAFZZ	96906	MS90728-34	.BOLT,MACHINE....................... UOC:V53	8
18	XDFFF	11083	537494	.CYLINDER GRP....................... UOC:V53	1
19	XDFZZ	07742	4458-18	..ROD ASSY.......................... UOC:V53	1
20	XDFZZ	11083	690256	..COLLAR............................ UOC:V53	1
21	XDFZZ	11083	694531	..GLAND............................. UOC:V53	1
22	XDFZZ	11083	538397	..PISTON............................ UOC:V53	1
23	XDFZZ	11083	691262	..NUT............................... UOC:V53	1

(1) ITEM NO	(2) SMR CODE	(3) CAGEC	(4) PART NUMBER	(5) DESCRIPTION AND USABLE ON CODES(UOC)	(6) QTY
24	XDFZZ	07742	4458-02	..BARREL ASSY........................ UOC:V53	1
25	XBFZZ	11083	693256	.ELBOW ASSY......................... UOC:V53	2
26	PAFZZ	96906	MS3367-1-9	STRAP,TIEDOWN,ELECT................ UOC:V53	3

END OF FIGURE

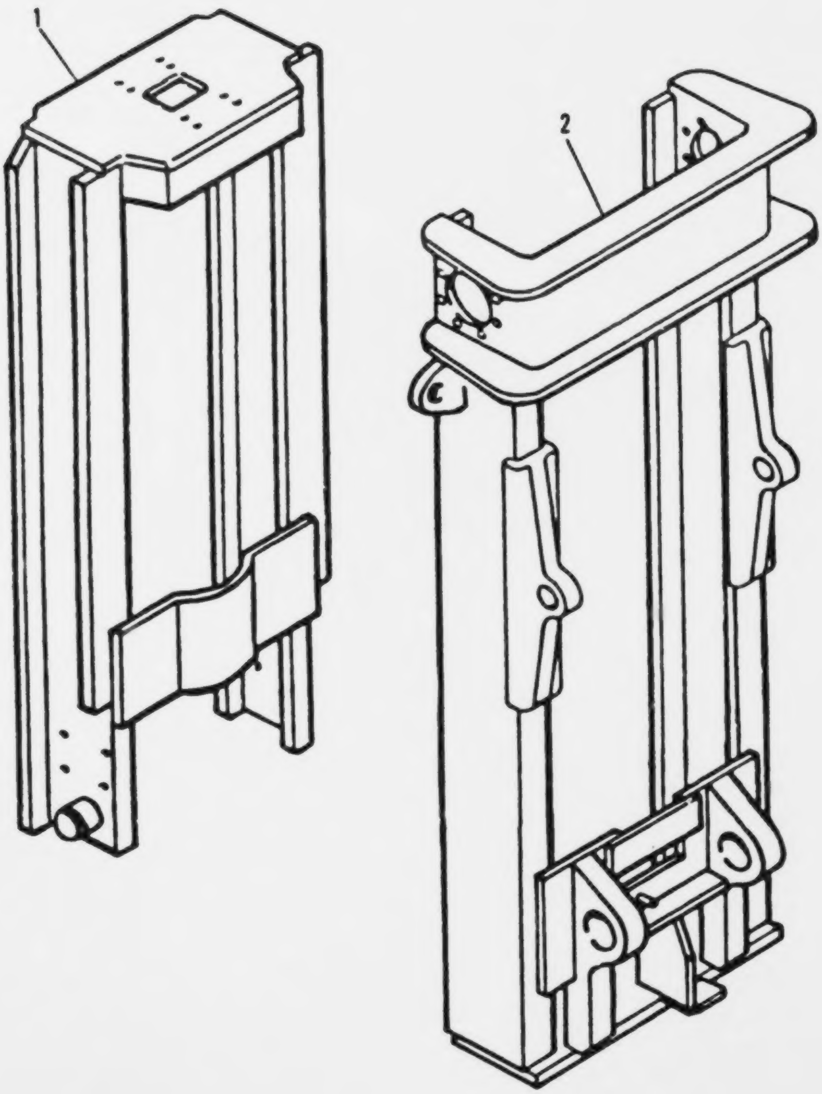

FIGURE 198. MAST ASSEMBLY

(1) ITEM NO	(2) SMR CODE	(3) CAGEC	(4) PART NUMBER	(5) DESCRIPTION AND USABLE ON CODES(UOC)	(6) QTY
				GROUP 2405: HYDRAULIC MAST COLUMN	
				FIG. 198 MAST ASSEMBLY	
1	XDFZZ	11083	537637	MAST ASSY,INNER...................... UOC:V53	1
2	XDFZZ	11083	537636	MAST ASSY,OUTER...................... UOC:V53	1

END OF FIGURE

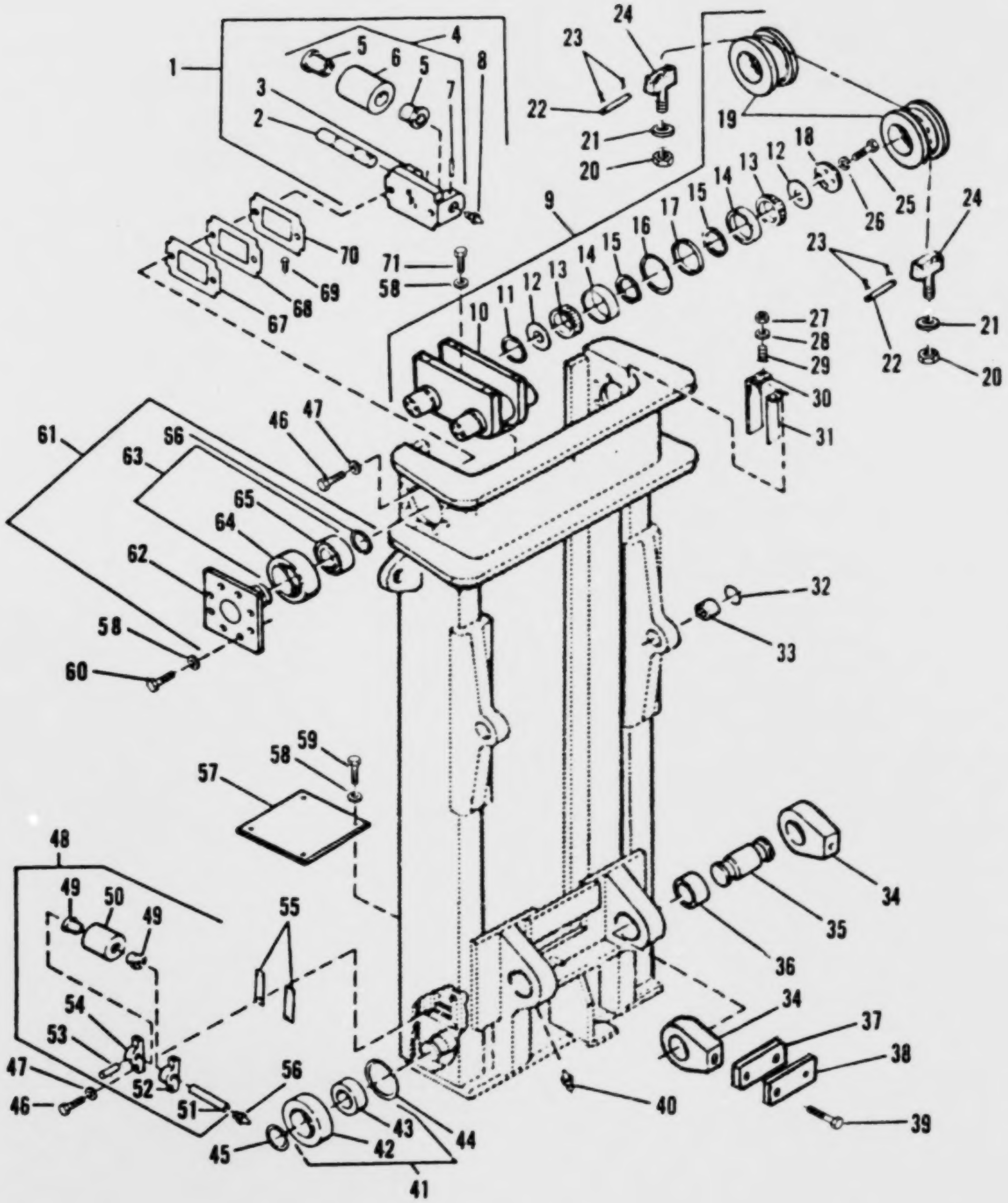

FIGURE 199. OUTER MAST AND MOUNTING ASSEMBLY

(1) ITEM NO	(2) SMR CODE	(3) CAGEC	(4) PART NUMBER	(5) DESCRIPTION AND USABLE ON CODES(UOC)	(6) QTY
				GROUP 2405: HYDRAULIC MAST COLUMN	
				FIG. 199 OUTER MAST AND MOUNTING ASSEMBLY	
1	XDFFF	11083	695940	ROLLER ASSY........................ UOC:V53	2
2	XDFZZ	11083	690321	.SHAFT.............................. UOC:V53	1
3	XDFZZ	11083	695939	.BRACKET ASSY...................... UOC:V53	1
4	XDFFF	11083	646370	.ROLLER GRP........................ UOC:V53	1
5	XDFZZ	11083	614809	..BEARING,ROLLER................... UOC:V53	2
6	XAFZZ	11083	646371	..ROLLER,INNER MAST G.............. UOC:V53	1
7	XDFZZ	30655	59-077-375-3500	..PIN,SPRING....................... UOC:V53	1
8	PAFZZ	96906	MS15003-1	.FITTING,LUBRICATION............... UOC:V53	1
9	XDFFF	11083	690320	SHEAVE GRP,CHAIN................... UOC:V53	1
10	XDFZZ	11083	690644	.BRACKET ASSY...................... UOC:V53	1
11	XDFZZ	11083	695257	.RING.............................. UOC:V53	4
12	XDFZZ	11083	688293	.SEAL RING,METAL................... UOC:V53	8
13	PAFZZ	11083	1P3935	.CONE AND ROLLERS,TA............... UOC:V53	8
14	PAFZZ	11083	1P3934	.RING,BEARING,OUTER................ UOC:V53	8
15	PAFZZ	11083	2P8386	.SPACER............................ UOC:V53	4
16	XDFZZ	84290	26028	.RING,RETAINING.................... UOC:V53	4
17	XDFZZ	84290	26024	.SPACER,CUP........................ UOC:V53	4
18	XDFZZ	11083	690658	.RETAINER.......................... UOC:V53	4
19	XDFZZ	11083	689478	.SHEAVE,CHAIN...................... UOC:V53	4
20	PAFZZ	72962	49-NE-242	NUT,SELF-LOCKING,HE................ UOC:V53	4
21	XDFZZ	99862	CL-10-SW	WASHER,SPHER....................... UOC:V53	2
22	XDFZZ	11083	664352	PIN,CHAIN ANCHOR................... UOC:V53	4
23	XDFZZ	11083	3B4611	PIN,COTTER......................... UOC:V53	8
24	XDFZZ	11083	664351	SCREW,CH ANR CRG AS................	4

(1) ITEM NO	(2) SMR CODE	(3) CAGEC	(4) PART NUMBER	(5) DESCRIPTION AND USABLE ON CODES(UOC)	(6) QTY
				UOC:V53	
25	XAFZZ	11083	S184	SCREW,CAP,HEX HD....................... UOC:V53	16
26	PAFZZ	11083	3B4508	WASHER,LOCK........................... UOC:V53	16
27	PAFZZ	15564	1377A	NUT,PLAIN,HEXAGON..................... UOC:V53	4
28	PAFZZ	11083	5M2894	WASHER,FLAT........................... UOC:V53	4
29	XDFZZ	10180	101-017-182	STUD.................................. UOC:V53	4
30	XDFZZ	11083	695039	PAD ASSY.............................. UOC:V53	2
31	XDFZF	11083	688273	SHIM,WEAR PAD......................... UOC:V53	48
32	PAFZZ	51814	WHT-393	RING,RETAINING........................ UOC:V53	2
33	XDFZZ	27737	GZ2540	BEARING,SPHER......................... UOC:V53	2
34	XDFZZ	11083	537755	EYE,RETAINING......................... UOC:V53	4
35	XDFZZ	11083	537756	PIN,MAST MOUNTING..................... UOC:V53	2
36	PAFZZ	60380	35SF56	BEARING,PLAIN,SELF-................... UOC:V53	2
37	XDFZZ	11083	537754	BAR................................... UOC:V53	2
38	XDFZZ	11083	537763	CLIP.................................. UOC:V53	2
39	PFFZZ	11083	7B8791	BOLT.................................. UOC:V53	4
40	PAFZZ	11083	3J7283	FITTING,LUBRICATION................... UOC:V53	2
41	XDFFF	11083	696013	ROLLER ASSY........................... UOC:V53	2
42	XDFZZ	11083	696014	.ROLLER............................... UOC:V53	1
43	XDFZZ	11083	657804	.BEARING,BALL......................... UOC:V53	1
44	XDFZZ	11083	663573	RING,RETAINING........................ UOC:V53	1
45	PAFZZ	96906	MS16624-1437	RING,RETAINING........................ UOC:V53	2
46	PAFZZ	11083	S1576	BOLT,MACHINE.......................... UOC:V53	12
47	PAFZZ	11083	5P8247	WASHER,FLAT........................... UOC:V53	12
48	XDFZZ	11083	646271	ROLLER ASSY........................... UOC:V53	2
49	XDFZZ	11083	614809	.BEARING,ROLLER....................... UOC:V53	2
50	XAFZZ	11083	646266	.ROLLER,CARRIAGE GUI..................	1

(1) ITEM NO	(2) SMR CODE	(3) CAGEC	(4) PART NUMBER	(5) DESCRIPTION AND USABLE ON CODES(UOC)	(6) QTY
				UOC:V53	
51	XDFZZ	11083	646272	.SHAFT,CARRIAGE & MA.............. UOC:V53	1
52	XDFZZ	11083	673160	.PILLOW BLOCK,SIDE T............... UOC:V53	1
53	XDFZZ	11083	457012	.PIN,SPRING......................... UOC:V53	1
54	XDFZZ	11083	673159	.PILLOW BLOCK,SIDE T............... UOC:V53	1
55	XDFZZ	11083	657927	SHIM,SIDE THR RLR.................. UOC:V53	40
56	PAFZZ	96906	MS15003-6	FITTING,LUBRICATION................ UOC:V53	2
57	XDFZZ	11083	664354	PAD,HOIST CYLINDER................. UOC:V53	1
58	PAFZZ	11083	5P8248	WASHER,FLAT......................... UOC:V53	24
59	PFFZZ	11083	7B5163	BOLT,MACHINE........................ UOC:V53	4
60	PAFZZ	11083	0L1178	BOLT,MACHINE........................ UOC:V53	16
61	XDFZZ	11083	657812	PARTS KIT,BEARING R................ UOC:V53	2
62	XAFZZ	11083	657809	.WELDMENT,GUIDE,RLR................ UOC:V53	1
63	XDFFF	11083	657955	.ROLLER ASSY........................ UOC:V53	1
64	XDFZZ	11083	657806	..ROLLER,GUIDE...................... UOC:V53	1
65	XDFZZ	11083	646147	..BEARING,BALL...................... UOC:V53	1
66	PAFZZ	79136	5100-354	.RING,RETAINING..................... UOC:V53	1
67	XDFZZ	11083	617916	SHIM,OUTER MAST GUI................ UOC:V53	10
68	XDFZZ	11083	673144	SHIM,OUTER MAST GUI................ UOC:V53	4
69	PAFZZ	11083	531426	SCREW,CAP,SOCKET HE................ UOC:V53	8
70	PAFZZ	11083	673145	SHIM................................ UOC:V53	2
71	PAFZZ	11083	S1897	BOLT,MACHINE........................ UOC:V53	1

END OF FIGURE

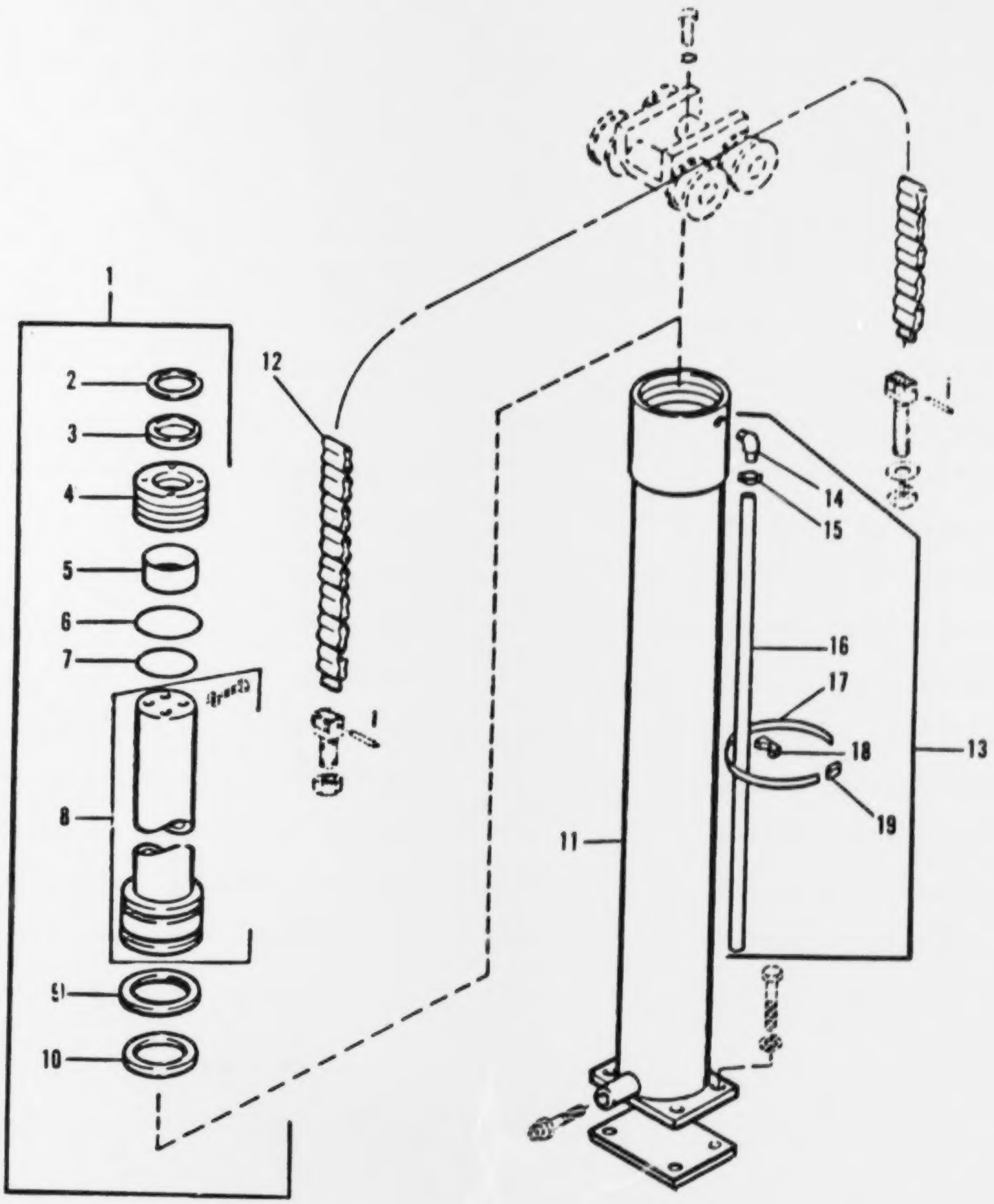

FIGURE 200. LIFT CYLINDER ASSEMBLY

GROUP 2405: HYDRAULIC MAST COLUMN

FIG. 200 LIFT CYLINDER ASSEMBLY

(1) ITEM NO	(2) SMR CODE	(3) CAGEC	(4) PART NUMBER	(5) DESCRIPTION AND USABLE ON CODES(UOC)	(6) QTY
1	PBFFF	11083	537741	CYLINDER ASSEMBLY,A UOC:V53	1
2	PAFZZ	11132	904977	.PACKING, PREFORMED UOC:V53	1
3	PAFZZ	11132	8903538	.SEAL, ROD, PACKING UOC:V53	1
4	XDFZZ	11132	261685	.HEAD,ROD UOC:V53	1
5	PAFZZ	11132	860050	.RING,WIPER UOC:V53	1
6	PAFZZ	11132	897448	.RING,BACKUP UOC:V53	1
7	PAFZZ	11083	1M9015	.PACKING,PREFORMED UOC:V53	1
8	XDFZZ	11132	240430	.ROD ASSY UOC:V53	1
9	PAFZZ	11132	8903538	.SEAL, ROD PACKING	1
10	PAFZZ	11132	860111	.RING,ROD WEAR UOC:V53	1
11	XDFZZ	11132	252154	.TUBE ASSY UOC:V53	1
12	PFFZZ	73433	BL-1288	CHAIN,LEAF UOC:V53	2
13	XDFFF	11083	618820	HOSE,OVERFLOW UOC:V53	1
14	XDFZZ	11083	616685	.ADAPTER,HOSE UOC:V53	1
15	XDFZZ	11083	617994	.CLAMP,HOSE UOC:V53	1
16	PAFZZ	01276	1525-4-22	.HOSE,NONMETALLIC UOC:V53	1
17	XDFZZ	11083	649918	.STRAP,BULK UOC:V53	1
18	XDFZZ	11083	649917	.SPACER,OVERFLOW HOS UOC:V53	2
19	XDFZZ	91725	204	.CLIP,STEEL BINDING UOC:V53	2

END OF FIGURE

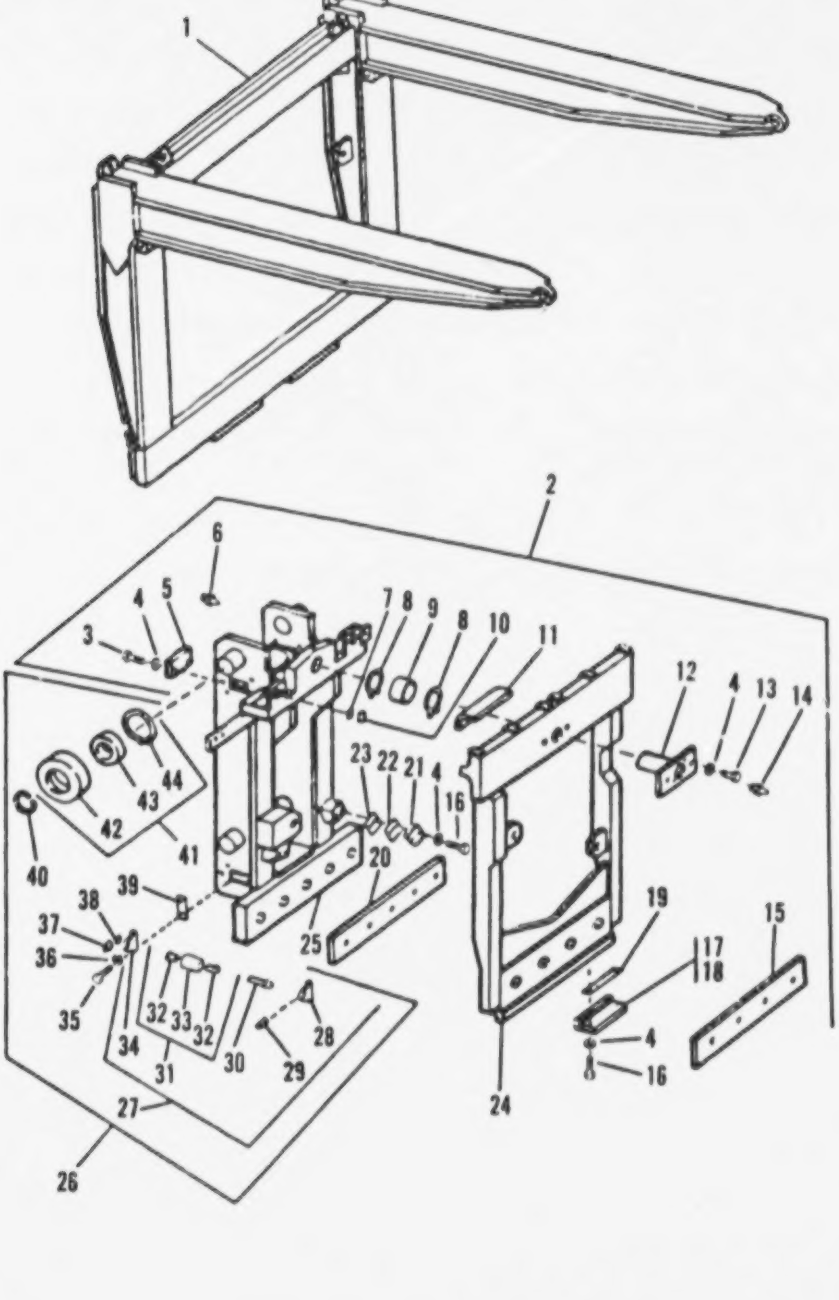

FIGURE 201. CARRIAGE ASSEMBLY

(1) ITEM NO	(2) SMR CODE	(3) CAGEC	(4) PART NUMBER	(5) DESCRIPTION AND USABLE ON CODES(UOC)	(6) QTY
				GROUP 2405: HYDRAULIC MAST COLUMN	
				FIG. 201 CARRIAGE ASSEMBLY	
1	XBFZZ	11083	537615	FORK ASSY............................ UOC:V53	1
2	XBFZZ	11083	537750	MOUNTING GRP,ATCH.................... UOC:V53	1
3	PAFZZ	11083	2A1538	.BOLT,MACHINE........................ UOC:V53	4
4	PAFZZ	11083	5P8248	.WASHER,FLAT......................... UOC:V53	20
5	XBFZZ	11083	537658	.BAR................................. UOC:V53	2
6	PAFZZ	96906	MS15003-6	.FITTING,LUBRICATION................. UOC:V53	2
7	XBFZZ	11083	537700	.SHIM................................ UOC:V53	8
8	PAFZZ	11083	3K2559	.RING................................ UOC:V53	2
9	XBFZZ	11083	5J6424	.BEARING............................. UOC:V53	1
10	XBFZZ	11083	537659	.BAR................................. UOC:V53	2
11	XBFZZ	11083	537554	.BLOCK,SLIDER........................ UOC:V53	4
12	XBFZZ	11083	537616	.SHAFT ASSY.......................... UOC:V53	1
13	PAFZZ	11083	1A456	.BOLT,MACHINE........................ UOC:V53	2
14	PFFZZ	96906	MS15003-1	.FITTING,LUBRICATION................. UOC:V53	1
15	XBFZZ	11083	537564	.PLATE............................... UOC:V53	1
16	PAFZZ	11083	1D4610	.BOLT,MACHINE........................ UOC:V53	14
17	XBFZZ	11083	538336	.BAR ASSY,LH......................... UOC:V53	1
18	XBFZZ	11083	538337	.BAR ASSY,RH......................... UOC:V53	1
19	XBFZZ	11083	538338	.SHIM................................ UOC:V53	10
20	XBFZZ	11083	537668	.PLATE............................... UOC:V53	1
21	XBFZZ	11083	537703	.BAR................................. UOC:V53	2
22	XBFZZ	11083	538257	.SHIM................................ UOC:V53	2
23	XBFZZ	11083	537704	.SHIM................................ UOC:V53	8
24	XDFZZ	11083	537606	.CARRIAGE ASSY,TILT.................. UOC:V53	1

(1) ITEM NO	(2) SMR CODE	(3) CAGEC	(4) PART NUMBER	(5) DESCRIPTION AND USABLE ON CODES(UOC)	(6) QTY
25	XBFZZ	11083	537631	.BRACKET ASSY,ROLLER................ UOC:V53	1
26	XBFFF	11083	696059	MOUNTING GRP,CRG.................... UOC:V53	1
27	XBFFF	11083	673146	.ROLLER ASSY,SIDE TH................ UOC:V53	4
28	XBFZZ	11083	673147	..PILLOW BLK,SIDE THR............... UOC:V53	1
29	XBFZZ	11083	457012	..PIN,SPRING........................ UOC:V53	1
30	XBFZZ	11083	646272	..SHAFT,CARRIAGE & MA............... UOC:V53	1
31	XBFZZ	11083	646271	..ROLLER ASSY....................... UOC:V53	1
32	XBFZZ	11083	614809	...BEARING,ROLLER................... UOC:V53	2
33	XAFZZ	11083	646266	...ROLLER,CARRIAGE GUI.............. UOC:V53	1
34	XBFZZ	11083	673148	..PILLOW BLK,SIDE THR............... UOC:V53	1
35	PAFZZ	11083	S1577	..BOLT,MACHINE...................... UOC:V53	16
36	PAFZZ	96906	MS35340850	..WASHER,LOCK....................... UOC:V53	16
37	PAFZZ	95879	1684B	.FITTING,LUBRICATION................ UOC:V53	4
38	PFFZZ	11083	3H0120	..ELBOW,PIPE........................ UOC:V53	4
39	XBFZZ	11083	657927	.SHIM,SIDE THR RLR.................. UOC:V53	20
40	XBFZZ	11083	5H5012	.RING,RTNG.......................... UOC:V53	4
41	XDFFF	11083	696013	.ROLLER ASSY........................ UOC:V53	4
42	XDFZZ	11083	696014	..ROLLER............................ UOC:V53	1
43	XBFZZ	11083	657804	..BEARING,BALL...................... UOC:V53	1
44	XBFZZ	80756	RRN775	..RING,RTNG......................... UOC:V53	1

END OF FIGURE

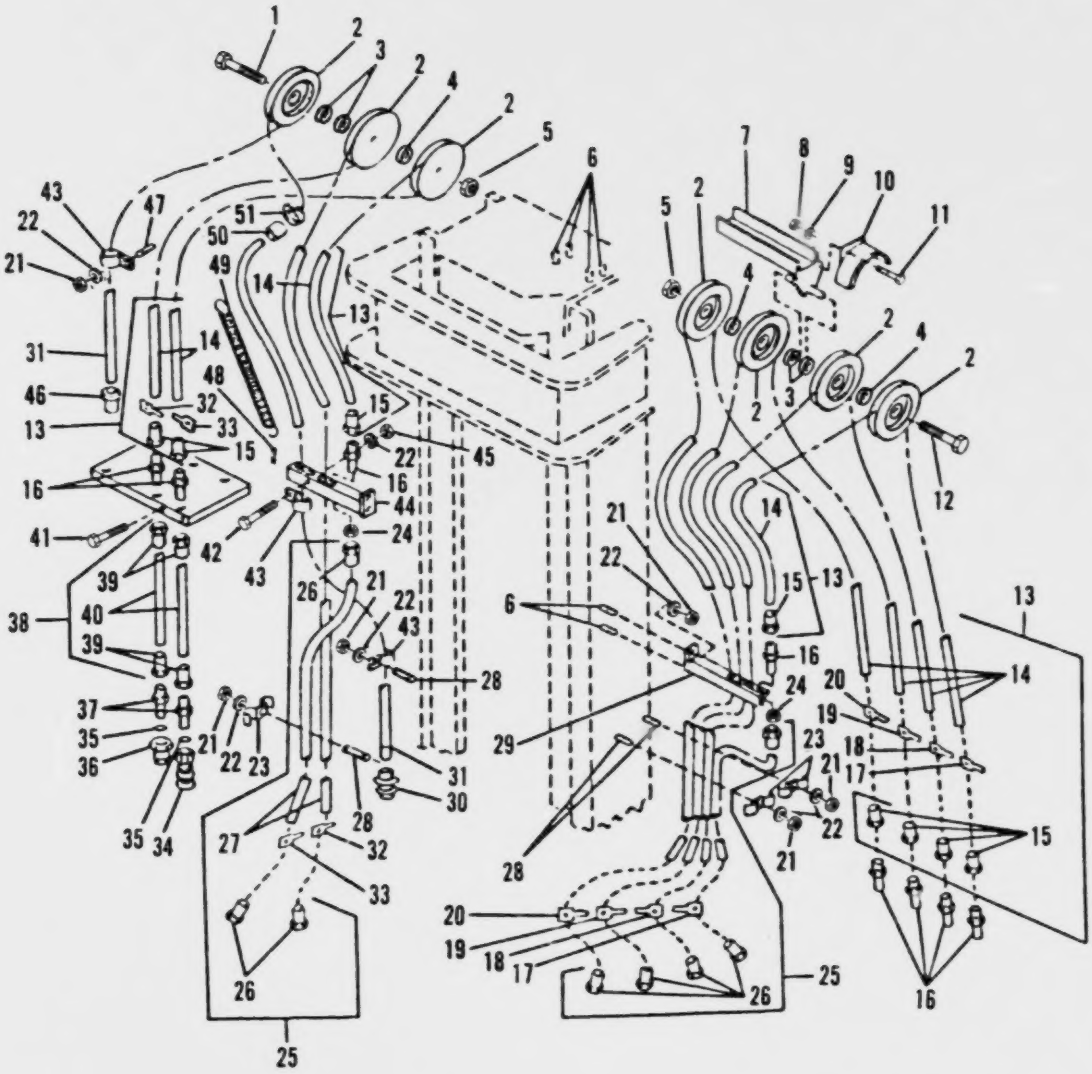

FIGURE 202. ATTACHMENT LINES

(1) ITEM NO	(2) SMR CODE	(3) CAGEC	(4) PART NUMBER	(5) DESCRIPTION AND USABLE ON CODES(UOC)	(6) QTY
				GROUP 2406: HYDRAULIC LINES AND FITTINGS	
				FIG. 202 ATTACHMENT LINES	
1	PAFZZ	11083	1D4593	BOLT,MACHINE.......................... UOC:V53	1
2	XDFZZ	21335	010-11515	PULLEY,IDLER.......................... UOC:V53	7
3	XDFZZ	52555	536631	TUBE.................................. UOC:V53	4
4	XDFZZ	11083	685107	SPACER................................ UOC:V53	3
5	PAFZZ	11083	2H3789	NUT,PLAIN,HEXAGON..................... UOC:V53	2
6	PAFZZ	85105	101-017-186	STUD,WELDING.......................... UOC:V53	4
7	XDFZZ	11083	537156	BRACKET ASSY.......................... UOC:V53	2
8	PAOZZ	23040	33797S36	NUT,PLAIN,HEXAGON..................... UOC:V53	4
9	PAOZZ	11083	9M1974	WASHER,FLAT........................... UOC:V53	4
10	XBOZZ	11083	696456	GUARD ASSY,SHEAVE..................... UOC:V53	4
11	PAOZZ	11083	1A9579	BOLT,MACHINE.......................... UOC:V53	4
12	PAFZZ	11083	1D4599	SCREW,CAP,HEXAGON H................... UOC:V53	1
13	MFFFF	11083	538129	HOSE ASSY MAKE FROM HOSE P/N 5P6624 UOC:V53	2
14	PAFZZ	81343	SAE100R7-6	.HOSE,NONMETALLIC..................... UOC:V53	1
15	PAFZZ	85757	3903-06546	.ADAPTER,STRAIGHT,TU.................. UOC:V53	2
16	PFFZZ	11083	2P1278	ADAPTER,STRAIGHT,TU................... UOC:V53	10
17	XDFZZ	11083	68C594	TAG,ID................................ UOC:V53	1
18	XDFZZ	11083	68C595	TAG,ID................................ UOC:V53	2
19	XDFZZ	11083	68C596	TAG,ID................................ UOC:V53	2
20	XDFZZ	11083	68C597	TAG,ID................................ UOC:V53	2
21	PAFZZ	15564	1377A	NUT,PLAIN,HEXAGON..................... UOC:V53	34
22	PAFZZ	11083	5M2894	WASHER,FLAT........................... UOC:V53	26
23	XDFZZ	11083	688358	CLAMP................................. UOC:V53	8
24	PAFZZ	11083	2P1279	NUT,PLAIN,HEXAGON.....................	10

(1) ITEM NO	(2) SMR CODE	(3) CAGEC	(4) PART NUMBER	(5) DESCRIPTION AND USABLE ON CODES(UOC)	(6) QTY
				UOC:V53	
25	MFFFF	11083	538128	HOSE ASSY MAKE FROM HOSE P/N 5P6624 UOC:V53	6
26	PAFZZ	85757	3903-06546	.ADAPTER,STRAIGHT,TU................ UOC:V53	4
27	PAFZZ	81343	SAE100R7-6	.HOSE,NONMETALLIC................ UOC:V53	2
28	XDFZZ	11083	678890	STUD,WELD........................... UOC:V53	16
29	XDFZZ	11083	538151	HANGER ASSY......................... UOC:V53	1
30	XAFZZ	11083	674602	.PLUG,STRAIGHT...................... UOC:V53	1
31	XAFZZ	79550	998	.CABLE,SPECIAL PURPO................ UOC:V53	1
32	PAFZZ	11083	680592	BAND,MARKER......................... UOC:V53	2
33	XDFZZ	11083	680593	TAG,ID.............................. UOC:V53	2
34	XDOZZ	73992	2-H-6	COUPLING HALF,QUICK................. UOC:V53	1
35	PAFZZ	58312	7L6385-CO	PACKING,PREFORMED................... UOC:V53	2
36	XDOZZ	73992	2-K-6	COUPLING HALF,QUICK................. UOC:V53	1
37	PAFZZ	96906	MS51525A6	ADAPTER,STRAIGHT,TU................. UOC:V53	2
38	MFFFF	11083	538127	HOSE ASSY MAKE FROM HOSE 5P6624.... UOC:V53	2
39	PAFZZ	85757	3903-06546	.ADAPTER,STRAIGHT,TU................ UOC:V53	2
40	PAFZZ	81343	SAE100R7-6	.HOSE,NONMETALLIC................... UOC:V53	1
41	PAFZZ	11083	0S1588	BOLT,MACHINE........................ UOC:V53	4
42	PAFZZ	11083	1A2209	BOLT,MACHINE........................ UOC:V53	1
43	PAFZZ	99953	338248	CLAMP,LOOP.......................... UOC:V53	14
44	XDFZZ	11083	538152	HANGER ASSY......................... UOC:V53	1
45	PAFZZ	11083	1B4203	NUT,PLAIN,HEXAGON................... UOC:V53	1
46	XAFZZ	98343	753	.CONNECTOR,PLUG,ELEC................ UOC:V53	1
47	XBFZZ	11083	6S7251	STUD,WELDING........................ UOC:V53	2
48	PAFZZ	96906	MS24665-418	PIN,COTTER.......................... UOC:V53	1
49	XBFZZ	85683	A-896	SPRING,EXTENSION.................... UOC:V53	1
50	XBFZZ	11083	5M3469	LOOM................................	1

(1) ITEM NO	(2) SMR CODE	(3) CAGEC	(4) PART NUMBER	(5) DESCRIPTION AND USABLE ON CODES(UOC)	(6) QTY
				UOC:V53	
51	PBFZZ	66295	10H	CLAMP,HOSE........................	1
				UOC:V53	

END OF FIGURE

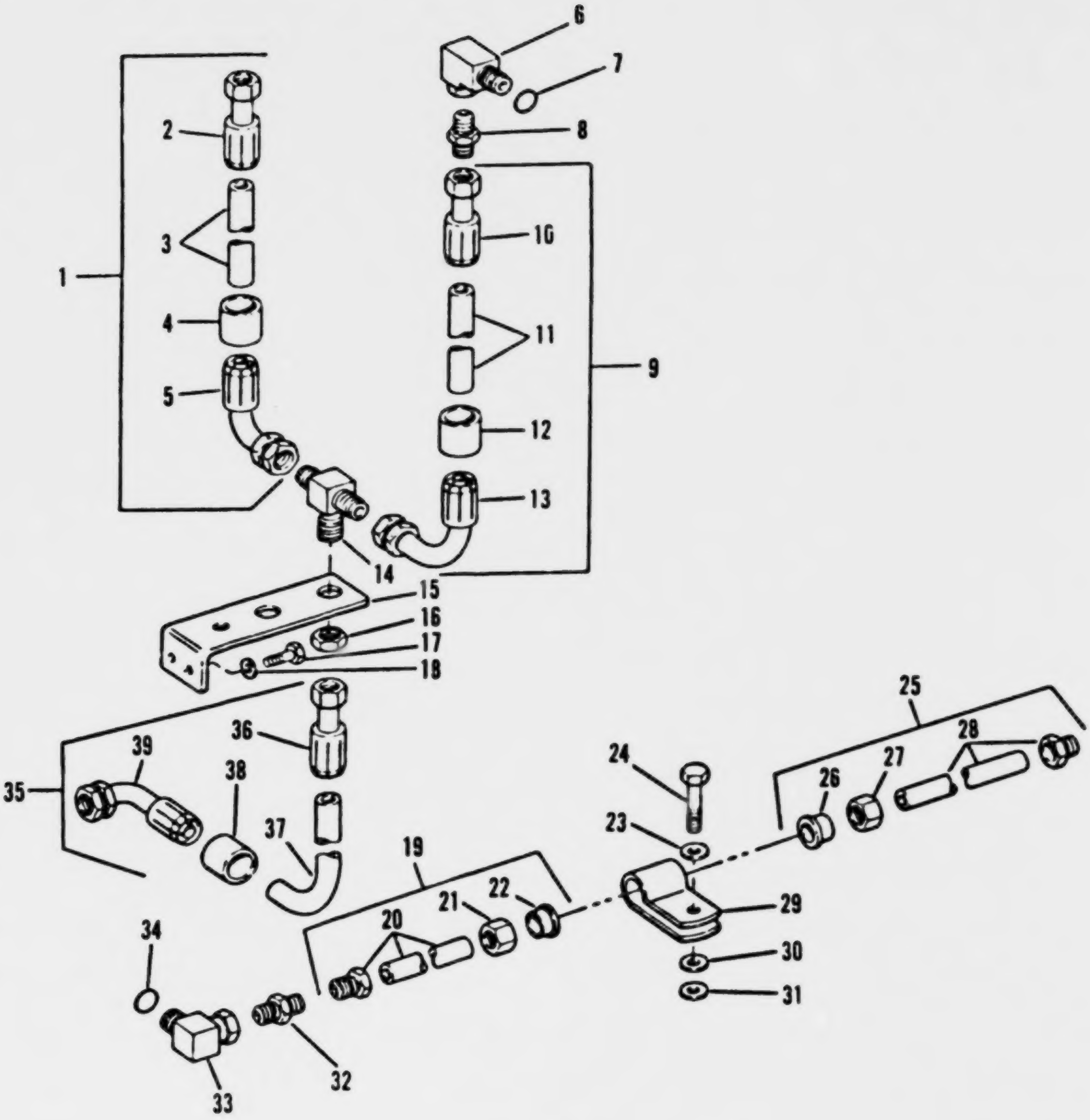

FIGURE 203. TILT CYLINDER LINES

(1) ITEM NO	(2) SMR CODE	(3) CAGEC	(4) PART NUMBER	(5) DESCRIPTION AND USABLE ON CODES(UOC)	(6) QTY
				GROUP 2406: HYDRAULIC LINES AND FITTINGS	
				FIG. 203 TILT CYLINDER LINES	
1	MFFFF	11083	5R4516	HOSE ASSY MAKE FROM HOSE P/N 5P180. UOC:V53	2
2	XDFZZ	11083	8S3759	.COUPLING,STEERING L................ UOC:V53	1
3	PAFZZ	11083	9S247	.HOSE,NONMETALLIC.................. UOC:V53	1
3	PAFZZ	11083	315744	ELBOW,TUBE......................... UOC:V53	1
4	PBFZZ	11083	3S7166	.PLUNGER,DETENT.................... UOC:V53	2
5	XBFZZ	11083	8S6389	.COUPLING ASSY..................... UOC:V53	1
6	XDFZZ	11083	684174	ELBOW,90 DEG,37 DEG................ UOC:V53	2
7	PAFZZ	81349	M83248/2-910	PACKING,PREFORMED.................. UOC:V53	4
8	XDFZZ	11083	5P9973	CONNECTOR,37 DEG FL................ UOC:V53	2
9	MFFFF	11083	5R4545	HOSE ASSY MAKE FROM HOSE P/N 5P180. UOC:V53	2
10	XDFZZ	11083	8S3759	.COUPLING,STEERING L............... UOC:V53	1
11	PAFZZ	11083	9S247	.HOSE,NONMETALLIC.................. UOC:V53	1
12	PBFZZ	11083	3S7166	.PLUNGER,DETENT.................... UOC:V53	2
13	XBFZZ	11083	8S6389	.COUPLING ASSY..................... UOC:V53	1
14	XDFZZ	11083	6B8827	TEE,37 DEG FLARED.................. UOC:V53	2
15	XDFZZ	5393C	66C542	HANGER,HYD HOSE MTG................ UOC:V53	1
16	XBFZZ	11083	6K8420	NUT................................ UOC:V53	2
17	PAFZZ	11083	0S1594	BOLT,MACHINE....................... UOC:V53	2
18	PAFZZ	11083	5P1075	WASHER,SQUARE CONE................. UOC:V53	2
19	XDFFF	11083	5R4515	TUBE ASSY.......................... UOC:V53	1
20	XAFZZ	11083	5P1836	.TUBE,BULK,STL..................... UOC:V53	1
21	XAFZZ	11083	8M0744	.NUT,37 DEG FLARED................. UOC:V53	1
22	XAFZZ	11083	080145	.SLEEVE,37 DEG FLARE............... UOC:V53	1
23	PAFZZ	11083	8M7145	WASHER,FLAT........................	1

(1) ITEM NO	(2) SMR CODE	(3) CAGEC	(4) PART NUMBER	(5) DESCRIPTION AND USABLE ON CODES(UOC)	(6) QTY
				UOC:V53	
24	PAFZZ	11083	0S1571	SCREW,CAP,HEXAGON H.................. UOC:V53	1
25	XDFFF	11083	5R4513	TUBE ASSY.......................... UOC:V53	1
26	XAFZZ	11083	080145	.SLEEVE,37 DEG FLARE................ UOC:V53	1
27	XAFZZ	11083	8M0744	.NUT,37 DEG FLARED.................. UOC:V53	1
28	XAFZZ	11083	5P1836	.TUBE,BULK,STL...................... UOC:V53	1
29	PAFZZ	11083	5K9660	CLAMP,LOOP.......................... UOC:V53	2
30	PAFZZ	11083	6H7127	BUSHING,SLEEVE...................... UOC:V53	1
31	PAFZZ	15434	108330	WASHER,FLAT......................... UOC:V53	1
32	PBFZZ	30780	12-16F5XS	ADAPTER,STRAIGHT,TU................. UOC:V53	2
33	PAFZZ	96906	MS51521A12	ELBOW,TUBE.......................... UOC:V53	2
34	PAFZZ	11083	7M8485	SEAL,ADAPTER,MOTOR.................. UOC:V53	2
35	MFFFF	11083	5R4514	HOSE ASSY MAKE FROM HOSE P/N 5P180. UOC:V53	2
36	XDFZZ	11083	8S3759	.COUPLING,STEERING L................ UOC:V53	1
37	PAFZZ	11083	9S247	HOSE,NONMETALLIC.................... UOC:V53	1
38	PBFZZ	11083	3S7166	.PLUNGER,DETENT..................... UOC:V53	2
39	XBFZZ	11083	8S6389	.COUPLING ASSY...................... UOC:V53	1

END OF FIGURE

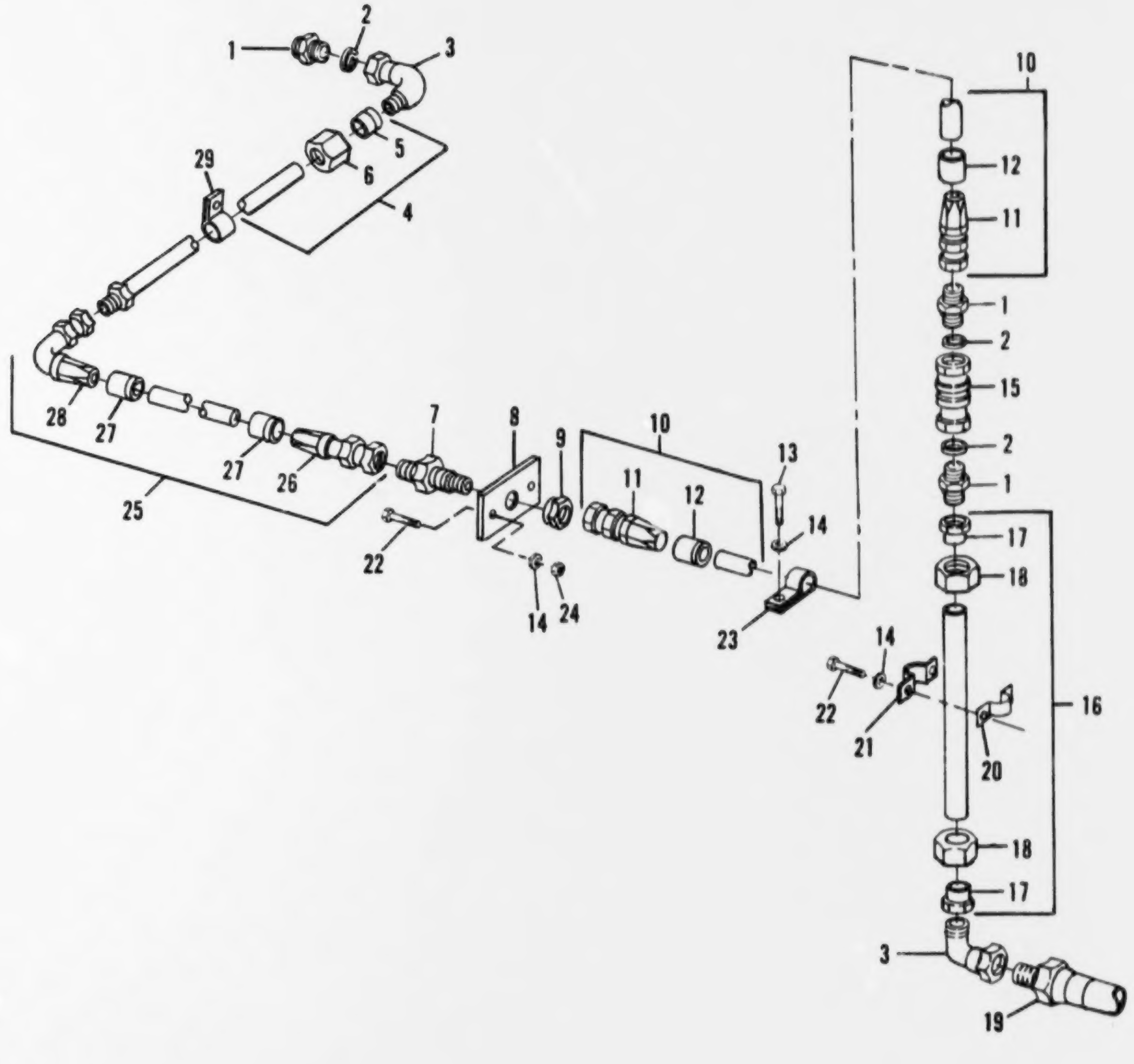

FIGURE 204. LIFT CYLINDER LINES

(1) ITEM NO	(2) SMR CODE	(3) CAGEC	(4) PART NUMBER	(5) DESCRIPTION AND USABLE ON CODES(UOC)	(6) QTY
				GROUP 2406: HYDRAULIC LINES AND FITTINGS	
				FIG. 204 LIFT CYLINDER LINES	
1	PBFZZ	11083	3C7935	CONNECTOR.............................. UOC:V53	3
2	PAFZZ	11083	7M8485	SEAL,ADAPTER,MOTOR................. UOC:V53	3
3	PFOZZ	11083	3J5744	ELBOW,90 DEG SWIVEL................ UOC:V53	1
4	PAFZZ	11083	5M2894	WASHER,FLAT........................ UOC:V53	8
4	XDFFF	11083	5R4517	TUBE ASSY.......................... UOC:V53	1
5	XAFZZ	11083	1P0044	.SLEEVE,37 DEG FLARE............... UOC:V53	1
6	XAFZZ	11083	1P0043	.NUT,37 DEG FLARED................. UOC:V53	1
7	XDFZZ	11083	2P1285	UNION,37 DEG FLARED................ UOC:V53	1
8	XDFZZ	11083	5R3816	PLATE.............................. UOC:V53	1
9	XDFZZ	11083	2P1286	NUT,LOCK,37 DEG FLA................ UOC:V53	1
10	MFFFF	11083	5R4532	HOSE ASSY MAKE FROM HOSE P/N 8S9355 UOC:V53	1
11	PAFZZ	11083	8S3918	.ADAPTER,STRAIGHT,TU............... UOC:V53	2
12	PBFZZ	11083	3S7252	.SLEEVE............................ UOC:V53	2
13	PAFZZ	96906	MS90728-45	BOLT,MACHINE....................... UOC:V53	1
14	PAFZZ	11083	5P1075	WASHER,SQUARE CONE................. UOC:V53	4
15	XDFZZ	91561	SM-900 ORB	COUPLING ASSY...................... UOC:V53	1
16	PAFZZ	11083	5R4557	TUBE ASSEMBLY,METAL................ UOC:V53	1
17	XAFZZ	11083	1P0044	.SLEEVE,37 DEG FLARE............... UOC:V53	2
18	XAFZZ	11083	1P0043	.NUT,37 DEG FLARED................. UOC:V53	2
19	XDFZZ	11083	5S6222	REGULATOR ASSY..................... UOC:V53	1
20	XDFZZ	11083	7J0728	CLIP............................... UOC:V53	1
21	XDFZZ	11083	7J0729	CLIP............................... UOC:V53	1
22	PAFZZ	11083	0S1594	BOLT,MACHINE....................... UOC:V53	3
23	XDFZZ	75272	COV2515	CLIP...............................	1

(1) ITEM NO	(2) SMR CODE	(3) CAGEC	(4) PART NUMBER	(5) DESCRIPTICN AND USABLE CN CODES(UOC)	(6) CTY
				UCC:V53	
24	PAFZZ	15564	1377A	NUT,PLAIN,HEXAGON.................. UCC:V53	2
25	MFFFF	11083	5R4508	HOSE ASSY MAKE FRCM HCSE P/N 5P181. UCC:V53	1
26	PAFZZ	11083	8S3918	.ACAPTER,STRAIGHT,TU............... UCC:V53	1
27	PBFZZ	11083	3S7252	.SLEEVE............................ UCC:V53	2
28	XDFZZ	11C83	8K5114	.ELBOW,TUBE TO HOSE................ UCC:V53	1
29	PFFZZ	11083	7S0530	CLAMP,LOOP......................... UCC:V53	1

END OF FIGURE

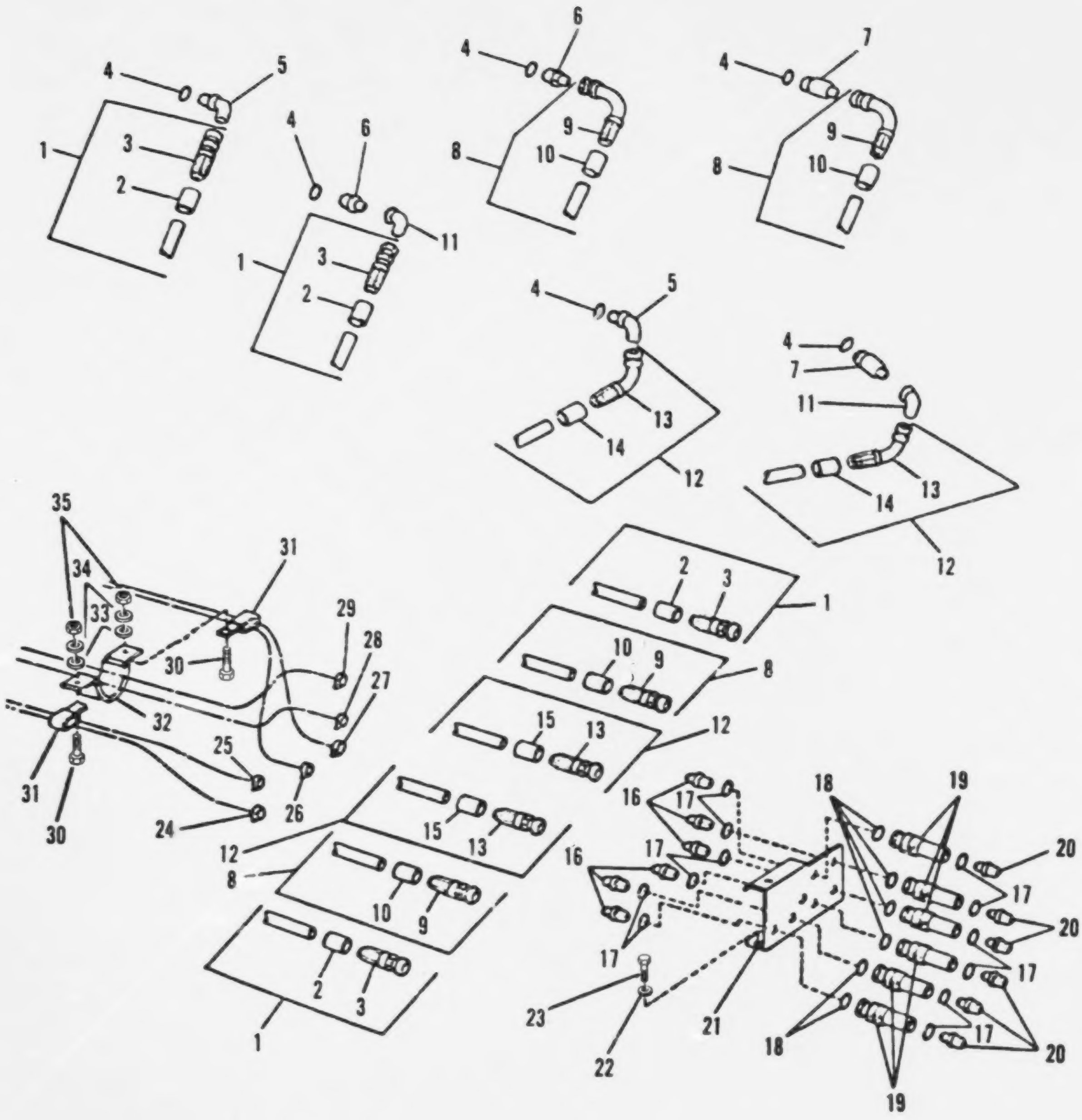

FIGURE 205. CARRIAGE LINES

(1) ITEM NO	(2) SMR CODE	(3) CAGEC	(4) PART NUMBER	(5) DESCRIPTION AND USABLE ON CODES(UOC)	(6) QTY
				GROUP 2406: HYDRAULIC LINES AND FITTINGS	
				FIG. 205 CARRIAGE LINES	
1	MFFFF	11083	5R4511	HOSE ASSY MAKE FROM HOSE P/N 5P179. UOC:V53	2
2	PFFZZ	11083	3S8606	.SLEEVE........................... UOC:V53	2
3	PBFZZ	11083	8S4055	.ADAPTER,STRAIGHT,TU............... UOC:V53	3
4	PAFZZ	81349	M83248/2-910	PACKING,PREFORMED.................. UOC:V53	6
5	XDFZZ	11083	6A7454	ELBOW,90 DEG,37 DEG................ UOC:V53	2
6	PFFZZ	11083	6K3607	ADAPTER,STRAIGHT,TU................ UOC:V53	2
7	XDFZZ	75472	SA-L2	CONNECTOR,STR THD,L................ UOC:V53	2
8	PFFZZ	11083	9S247	HOSE,NONMETALLIC................... UOC:V53	2
9	PBFZZ	11083	8S6391	.ELBOW,TUBE TO HOSE................ UOC:V53	1
10	PBFZZ	11083	3S8606	.SLEEVE............................ UOC:V53	2
11	PAFZZ	11083	8M0547	ELBOW.............................. UOC:V53	1
12	MFFFF	11083	5R4512	HOSE ASSY MAKE FROM HOSE P/N 5P179. UOC:V53	2
13	PBFZZ	11083	8S6391	.ELBOW,TUBE TO HOSE................ UOC:V53	1
14	PFFZZ	11083	3S8606	.SLEEVE............................ UOC:V53	2
15	PBFZZ	11083	8S4055	.ADAPTER,STRAIGHT,TU............... UOC:V53	1
16	PBFZZ	11083	8M0505	ADAPTER,STRAIGHT,TU................ UOC:V53	6
17	PAFZZ	81349	M83248-2-908	PACKING,PREFORMED.................. UOC:V53	12
18	XDFZZ	51814	WST-100	RING,RETAINING,EXT................. UOC:V53	6
19	XDFZZ	91561	7706-006	COUPLING,QUICK DISC................ UOC:V53	6
20	PBFZZ	96906	MS51525A6-8	ADAPTER,STRAIGHT,TU................ UOC:V53	6
21	XDFZZ	11083	5R4555	BRACKET ASSY....................... UOC:V53	1
22	PAFZZ	11083	5P1076	WASHER,SHOULDERED A................ UOC:V53	2
23	PAFZZ	11083	0S1621	BOLT,MACHINE....................... UOC:V53	3
24	XDFZZ	11083	5R4563	BAND,MARKER........................	2

(1) ITEM NO	(2) SMR CODE	(3) CAGEC	(4) PART NUMBER	(5) DESCRIPTION AND USABLE ON CODES(UOC)	(6) QTY
				UOC:V53	
25	XDFZZ	11083	5R4564	BAND,MARKER............................ UOC:V53	2
26	XDFZZ	11083	5R4567	BAND,MARKER............................ UOC:V53	2
27	XDFZZ	11083	5R4568	BAND,MARKER............................ UOC:V53	2
28	XDFZZ	11083	5R4566	BAND,MARKER............................ UOC:V53	2
29	XDFZZ	11083	5R4565	BAND,MARKER............................ UOC:V53	2
30	PAFZZ	11083	S1587	BOLT,MACHINE........................... UOC:V53	2
31	PAFZZ	75272	CDV-1617	CLAMP,LOOP............................. UOC:V53	2
32	XDFZZ	11083	2V7901	CLAMP.................................. UOC:V53	1
33	XDFZZ	11083	1K1122	COLLAR................................. UOC:V53	2
34	PAFZZ	11083	5P1076	WASHER,SHOULDERED A.................... UOC:V53	3
35	PAFZZ	96906	MS51967-14	NUT,PLAIN,HEXAGON...................... UOC:V53	2

END OF FIGURE

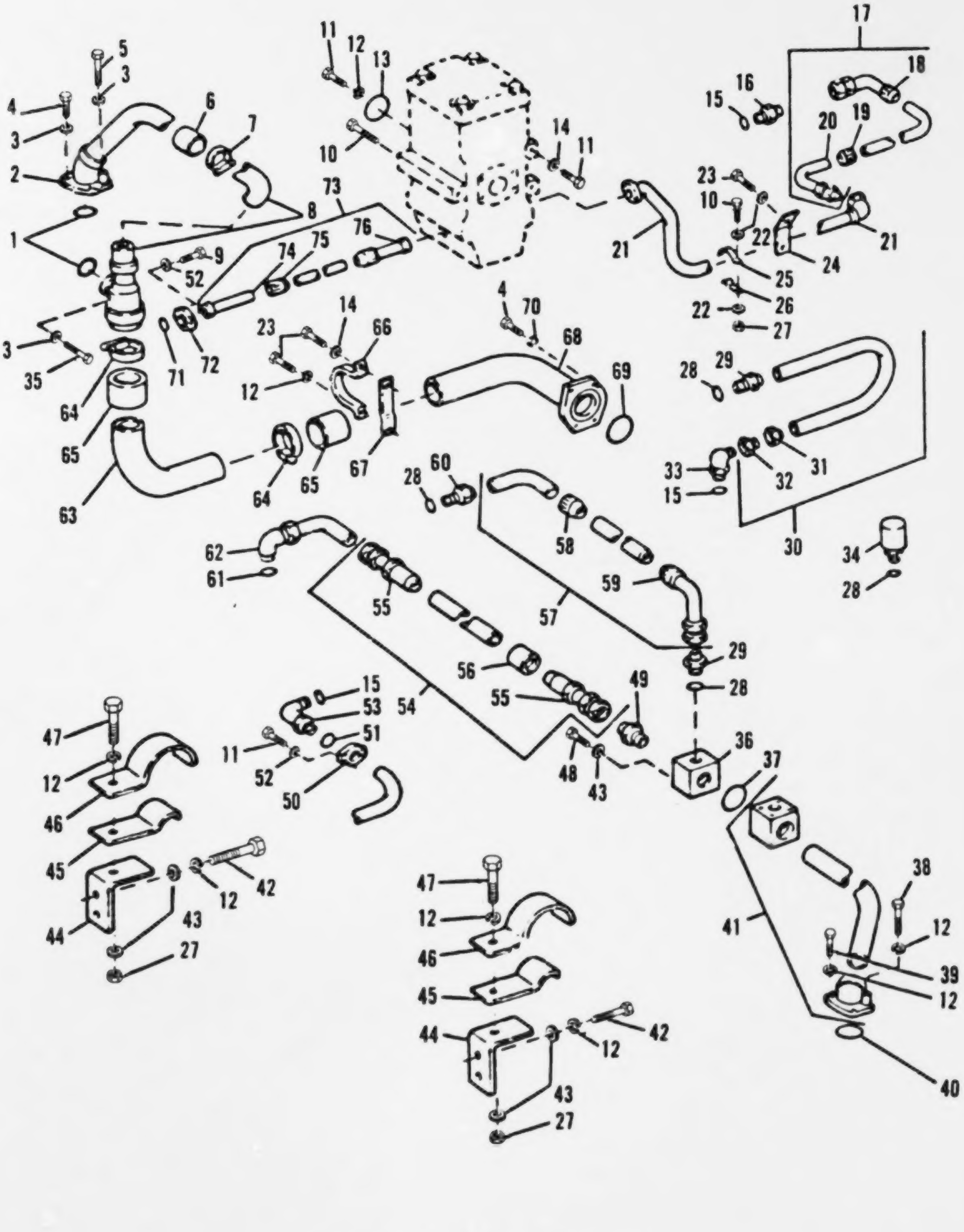

FIGURE 206. HYDRAULIC PUMP LINES

(1) ITEM NO	(2) SMR CODE	(3) CAGEC	(4) PART NUMBER	(5) DESCRIPTION AND USABLE ON CODES(UOC)	(6) QTY
				GROUP 2406: HYDRAULIC LINES AND FITTINGS	
				FIG. 206 HYDRAULIC PUMP LINES	
1	PAFZZ	11083	2H6338	PACKING,PREFORMED.................. UOC:V53	2
2	XDFZZ	11083	9K5567	TUBE ASSY.......................... UOC:V53	1
3	PAFZZ	11083	4J2677	WASHER,FLAT........................ UOC:V53	8
4	PAFZZ	96906	MS90728-163	SCREW,CAP,HEXAGON H................ UOC:V53	7
5	PAFZZ	11083	7D4593	BOLT, MACHINE......................	1
6	XDFZZ	11083	7D8368	HOSE............................... UOC:V53	1
7	PBFZZ	11083	5PC598	CLAMP.............................. UOC:V53	2
8	XDFZZ	11083	5R4486	TUBE ASSY.......................... UOC:V53	1
9	PAFZZ	96906	MS90728-113	SCREW,CAP,HEXAGON H................ UOC:V53	4
10	PAFZZ	11083	2B947	BOLT,MACHINE....................... UOC:V53	3
11	PAFZZ	11083	S1587	BOLT,MACHINE....................... UOC:V53	9
12	XBFZZ	11083	1P37C7	PACKING,PREFORMED.................. UOC:V53	1
13	PAFZZ	96906	MS35338-48	WASHER,LOCK........................ UOC:V53	12
14	PFFZZ	11083	2M849	WASHER,FLAT........................ UOC:V53	5
15	PAFZZ	11083	7M8485	SEAL,ADAPTER,MOTOR................. UOC:V53	3
16	PBFZZ	11083	307935	CONNECTOR.......................... UOC:V53	1
17	MFFFF	11083	5R4523	HOSE ASSY MAKE FROM HOSE P/N 839355 UOC:V53	1
18	PAFZZ	11083	8S3918	.ADAPTER,STRAIGHT,TU............... UOC:V53	1
19	PBFZZ	11083	3S7252	.SLEEVE............................ UOC:V53	2
20	XDFZZ	11083	2P1411	.COUPLING ASSY..................... UOC:V53	1
21	XDFZZ	11083	4V5412	TUBE,ASSY.......................... UOC:V53	1
22	PAFZZ	11083	3V3306	WASHER,FLAT........................ UOC:V53	3
23	PAFZZ	11083	0S1621	BOLT,MACHINE....................... UOC:V53	5
24	XDFZZ	11083	3V7868	BRACKET............................ UOC:V53	1

(1) ITEM NO	(2) SMR CODE	(3) CAGEC	(4) PART NUMBER	(5) DESCRIPTION AND USABLE ON CODES(UOC)	(6) QTY
25	PAFZZ	11083	2V6351	CLIP,RETAINING....................... UOC:V53	1
26	PAFZZ	11083	2V6353	CLIP,RETAINING....................... UOC:V53	1
27	PAFZZ	96906	MS51967-14	NUT,PLAIN,HEXAGON.................... UOC:V53	2
28	PAFZZ	99517	A180-115MILP2573 2	PACKING,PREFORMED.................... UOC:V53	4
29	PFFZZ	96906	MS51525A12	ADAPTER,STRAIGHT,TU.................. UOC:V53	2
30	MFFFF	11083	5R4519	TUBE,ASSY MAKE FROM TUBE P/N 5P1836 UOC:V53	1
31	PBFZZ	11083	8M744	.NUT,TUBE COUPLING................... UOC:V53	2
32	XDFZZ	11083	8145	.SLEEVE,37 DEG FLRD.................. UOC:V53	2
33	XDFZZ	11083	5P3466	ELBOW,90 DEG......................... UOC:V53	1
34	XDFZZ	91561	V120-1214	VALVE,BREAKER........................ UOC:V53	1
35	PAFZZ	11083	8S9092	BOLT,MACHINE......................... UOC:V53	4
36	XDFZZ	11083	5R4518	MANIFOLD............................. UOC:V53	1
37	PAFZZ	11083	1P3708	PACKING,PREFORMED.................... UOC:V53	2
38	PAFZZ	11083	S1573	BOLT,MACHINE......................... UOC:V53	2
39	PAFZZ	11083	7B3235	BOLT,MACHINE......................... UOC:V53	2
40	PAFZZ	11083	5H8848	PACKING,PREFORMED.................... UOC:V53	1
41	XDFFF	11083	1V9741	TUBE ASSY............................ UOC:V53	1
42	PAFZZ	11083	6H1717	BOLT,MACHINE......................... UOC:V53	2
43	PAFZZ	11083	4B4280	WASHER,FLAT.......................... UOC:V53	8
44	XDFZZ	11083	1V9692	BRACKET ASSY......................... UOC:V53	1
45	PAFZZ	11083	2V6350	CLIP,RETAINING....................... UOC:V53	1
46	PAFZZ	11083	2V6352	CLIP,RETAINING....................... UOC:V53	1
47	PAFZZ	11083	0S1595	BOLT,MACHINE......................... UOC:V53	1
48	PAFZZ	96906	MS90728-120	SCREW,CAP,HEXAGON H.................. UOC:V53	4
49	PAFZZ	11083	3I8759	ADAPTER,STRAIGHT,TU.................. UOC:V53	2
50	XDFZZ	11083	5R3784	FLANGE............................... UOC:V53	1

(1) ITEM NO	(2) SMR CODE	(3) CAGEC	(4) PART NUMBER	(5) DESCRIPTION AND USABLE ON CODES(UOC)	(6) QTY
51	PAFZZ	11083	4J0523	PACKING,PREFORMED.................... UOC:V53	1
52	PAFZZ	11083	5P8245	WASHER,FLAT.......................... UOC:V53	8
53	XDFZZ	62983	307951	ELBOW, 90 DEG,37 DE.................. UOC:V53	1
54	MFFFF	11083	5R4497	HOSE ASSY MAKE FROM HOSE P/N 5P740. UOC:V53	1
55	PFFZZ	11083	2P0988	.ADAPTER,STRAIGHT,TU................ UOC:V53	2
56	PAFZZ	11083	3S7116	.SLEEVE.............................. UOC:V53	2
57	MFFFF	11083	5R4501	HOSE,ASSY MAKE FROM HOSE P/N 5P180. UOC:V53	1
58	PAFZZ	11083	3S7166	.PLUNGER,DETENT...................... UOC:V53	2
59	XDFZZ	11083	8S6389	.COUPLING ASSY....................... UOC:V53	2
60	XDFZZ	11083	3P1427	CONNECTOR,37 DEG,LC.................. UOC:V53	1
61	PAFZZ	11083	2S4078	PACKING,PREFORMED.................... UOC:V53	2
62	PBFZZ	78640	307975	ELBOW,TUBE........................... UOC:V53	1
63	XDFZZ	11083	5R4428	TUBE................................. UOC:V53	1
64	PAFZZ	11083	5P1717	CLAMP,HOSE........................... UOC:V53	4
65	PBFZZ	11083	9M5242	HOSE,NONMETALLIC..................... UOC:V53	2
66	XDFZZ	11083	1V3878	CLAMP................................ UOC:V53	2
67	XDFZZ	11083	1V3876	STRIP ASSY........................... UOC:V53	2
68	XDFZZ	11083	2V6354	TUBE ASSY............................ UOC:V53	1
69	PAFZZ	11083	2H3935	PACKING,PREFORMED.................... UOC:V53	1
70	PAFZZ	96906	MS16625-1200	RING,RETAINING....................... UOC:V53	4
71	PAFZZ	11083	4J0524	PACKING,PREFORMED.................... UOC:V53	1
72	PBFZZ	11083	1P4579	FLANGE............................... UOC:V53	2
73	MFFFF	11083	5R4469	HOSE ASSY MAKE FROM HOSE P/N 5P180. UOC:V53	1
74	PBFZZ	11083	3S8568	.ELBOW,FLANGE TO HOS................ UOC:V53	1
75	PBFZZ	11083	3S7116	.SLEEVE.............................. UOC:V53	2
76	XDFZZ	11083	5S3778	.STEM ASSY........................... UOC:V53	1

END OF FIGURE

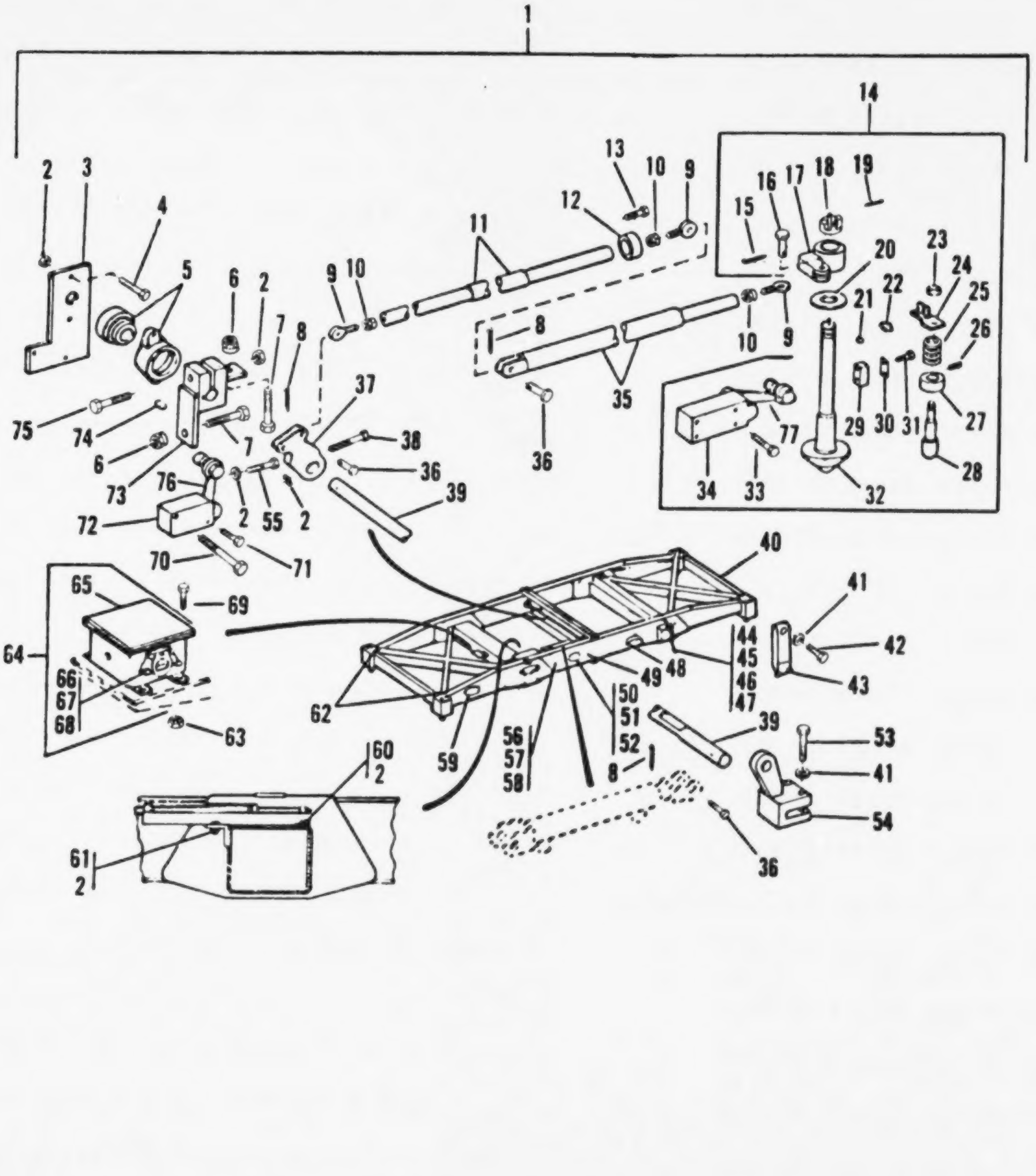

FIGURE 207. 20 FOOT TOPHANDLER

(1) ITEM NO	(2) SMR CODE	(3) CAGEC	(4) PART NUMBER	(5) DESCRIPTION AND USABLE ON CODES(UOC)	(6) QTY
				GROUP 33: SPECIAL PURPOSE KITS	
				GROUP 3307: SPECIAL PURPOSE KITS	
				FIG. 207 20 FOOT TOPHANDLER	
1	PBOFF	52555	E9137	TOPHANDLER, 20 FT....................	1
2	PAFZZ	19207	443339	.NUT,SELF-LOCKING,HE................ UOC:V97	12
3	XBFZZ	52555	6915-1	.PLATE,LIMIT SWITCH................ UOC:V97	1
4	PAFZZ	11083	S1587	.BOLT,MACHINE...................... UOC:V97	2
5	PFFZZ	52555	9412-1	.BEARING........................... UOC:V97	2
6	PAFZZ	11083	1B4430	.NUT,PLAIN,HEXAGON................. UOC:V97	2
7	PAFZZ	96906	MS90727-115	.SCREW,CAP,HEXAGON H............... UOC:V97	2
8	PAFZZ	96906	MS24665-353	.PIN,COTTER........................ UOC:V97	8
9	PFFZZ	65508	9413-1	.CONNECTOR,ROD END................. UOC:V97	12
10	PAFZZ	24617	145036	.NUT,SELF-LOCKING,HE............... UOC:V97	12
11	PFFZZ	52555	2441-10	.ROD,OPERATING..................... UOC:V97	4
12	PFFZZ	52555	9414-1	.BUSHING........................... UOC:V97	4
13	PAFZZ	96906	MS90728-3	.SCREW,CAP,HEXAGON H............... UOC:V97	4
14	PAOFZ	65508	9305-1	.LOCK ASSEMBLY,TWIST............... UOC:V97	2
15	PAFZZ	96906	MS24665-353	..PIN,COTTER....................... UOC:V97	1
16	PFFZZ	65508	B2364-1	..PIN,STRAIGHT,HEADED.............. UOC:V97	1
17	PFFZZ	65508	B2365-1	..LEVER,REMOTE CONTRO.............. UOC:V97	1
18	XBFZZ	11083	523380	ATTACHMENT ARR..................... UOC:V53	1
19	PAFZZ	96906	MS24665-628	..PIN,COTTER....................... UOC:V97	1
20	PFFZZ	65508	A9313-1	..WASHER,FLAT...................... UOC:V97	1
21	PFFZZ	96906	MS20066-734	..KEY STOCK........................ UOC:V97	1
22	PAFZZ	96906	MS15003-1	..FITTING,LUBRICATION.............. UOC:V97	1
23	PAFZZ	96906	MS21044-C10	..NUT,SELF-LOCKING,HE.............. UOC:V97	1
24	PFFZZ	65508	B2892-1	..ARM,SWITCH ACTUATOR..............	1

(1) ITEM NO	(2) SMR CODE	(3) CAGEC	(4) PART NUMBER	(5) DESCRIPTION AND USABLE ON CODES(UOC)	(6) QTY
				UOC:V97	
25	PFFZZ	65508	B42214-1	..SPRING,HELICAL,COMP	1
				UOC:V97	
26	PAFZZ	96906	MS51963-67	..SETSCREW	1
				UOC:V97	
27	PFFZZ	65508	A9304-1	..BEARING,SLEEVE	1
				UOC:V97	
28	PFFZZ	65508	B3133-1	..PLUNGER,SWITCH	1
				UOC:V97	
29	PFFZZ	65508	B3128-1	..STOP,ELECTRICAL SWI	1
				UOC:V97	
30	XDFZZ	52555	B2913-1	..SHIM	6
				UOC:V97	
31	PAFZZ	96906	MS24667-32L	..SCREW,CAP,SOCKET HE	2
				UOC:V97	
32	PFFZZ	52555	C46806-1	..BAYONET,SPEADER	1
				UOC:V97	
33	PAFZZ	96906	MS16997-58	..SCREW,CAP,SOCKET HE	2
				UOC:V97	
34	PAOZZ	65508	B6984-4	..SWITCH,SENSITIVE	4
				UOC:V97	
35	PFFZZ	52555	6904-1	.ROD EXTENSION,OPERA	4
				UOC:V97	
36	PFFZZ	52555	2364-1	.PIN,CLEVIS	8
				UOC:V97	
37	PFFZZ	52555	2438-1	.ROD LEVER,OPERATING	2
				UOC:V97	
38	PAFZZ	11083	1D4566	.BOLT,MACHINE	2
				UOC:V97	
39	PFFZZ	52555	9248-1	.SHAFT,OPERATING	1
				UOC:V97	
40	XBFZZ	52555	9235-1	.FRAME CONSTRUCTION	1
				UOC:V97	
41	PAFZZ	96906	MS35335-65	.WASHER,LOCK	12
				UOC:V97	
42	PAFZZ	11083	1A1460	.BOLT,MACHINE	8
				UOC:V97	
43	PFFZZ	65508	9231-1	.BRACKET,MOUNTING	2
				UOC:V97	
44	PFFZZ	65508	9408-1	.CHAIN ASSEMBLY,SING	2
				UOC:V97	
45	PFFZZ	52555	A9410-1	..SHACKLE	2
				UOC:V97	
46	XAFZZ	52555	A9409-1	..CHAIN	3
47	XAFZZ	52555	A9411-1	..MASTER LINK	2
48	PFOZZ	52555	9425-1	.DECAL,LUBRICATION	2
				UOC:V97	
49	PFOZZ	52555	9140-1	.DECAL,WARNING	2
				UOC:V97	
50	PFFZZ	52555	5920-1	.NAME PLATE	2
				UOC:V97	
51	PAFZZ	96906	MS90728-8	.SCREW,CAP,HEXAGON H	8

(1) ITEM NO	(2) SMR CODE	(3) CAGEC	(4) PART NUMBER	(5) DESCRIPTION AND USABLE ON CODES(UOC)	(6) QTY
				UOC:V97	
52	PAFZZ	11083	2D6235	.NUT,SELF-LOCKING,HE.................. UOC:V97	8
53	PAFZZ	11083	1A5822	.BOLT,MACHINE......................... UOC:V97	2
54	PFFZZ	52555	5361-1	.LEVER ARM,CYLINDER................... UOC:V97	1
55	PAFZZ	11083	1D4566	.BOLT,MACHINE......................... UOC:V97	2
56	PFOZZ	52555	9123-1	.DECAL,SPREADER....................... UOC:V97	2
57	PFFZZ	52555	9126-1	.DECAL,PARTS AND SER.................. UOC:V97	2
58	PFFZZ	65508	9125-1	.MARKER,IDENTIFICAT................... UOC:V97	2
59	PFOZZ	65508	9124-1	.MARKER,IDENTIFICATI.................. UOC:V97	2
60	XAFZZ	11083	S1620	.SCREW................................	2
61	PFFZZ	11083	1P6500	.SEAL................................. UOC:V97	2
62	PFOZZ	52555	9457-1	.DECAL,WARNING........................ UOC:V97	4
63	XDFZZ	11083	1D4717	.NUT,PLAIN,HEXAGON.................... UOC:V97	4
64	PFFFZ	65508	D9289-1	.JUNCTION BOX......................... UOC:V97	1
65	XBFZZ	52555	A9290-1	..JUNCTION BOX........................ UOC:V97	1
66	PAOZZ	52555	A9291-1	..ELECTRICAL SOCKET................... UOC:V97	1
67	PFFZZ	96906	MS90727-6	..BOLT,MACHINE........................ UOC:V97	3
68	PAFZZ	11083	2D6235	..NUT,SELF-LOCKING,HE................. UOC:V97	3
69	PAFZZ	66155	22524R1	.SCREW,CAP,HEXAGON H.................. UOC:V97	4
70	PAFZZ	96906	MS16998-32	.SCREW,CAP,SOCKET HE.................. UOC:V97	1
71	PAFZZ	96906	MS16998-29	.SCREW,CAP,SOCKET HE.................. UOC:V97	1
72	PAOZZ	65508	B6984-1	.SWITCH,SENSITIVE..................... UOC:V97	1
73	PFFZZ	52555	2355-1	.TRIP LEVER,LIMIT SW.................. UOC:V97	1
74	PAFZZ	96906	MS20066-304	.KEY,MACHINE.......................... UOC:V97	1
75	PAFZZ	11083	2B947	.BOLT,MACHINE......................... UOC:V97	2
76	XBFZZ	52555	A93071-1	.LEVER, LIMIT SWITCH..................	1
77	PFFZZ	11083	A9307-2	.LEVER,REMOTE CONTRO.................. UOC:V97	4

END OF FIGURE

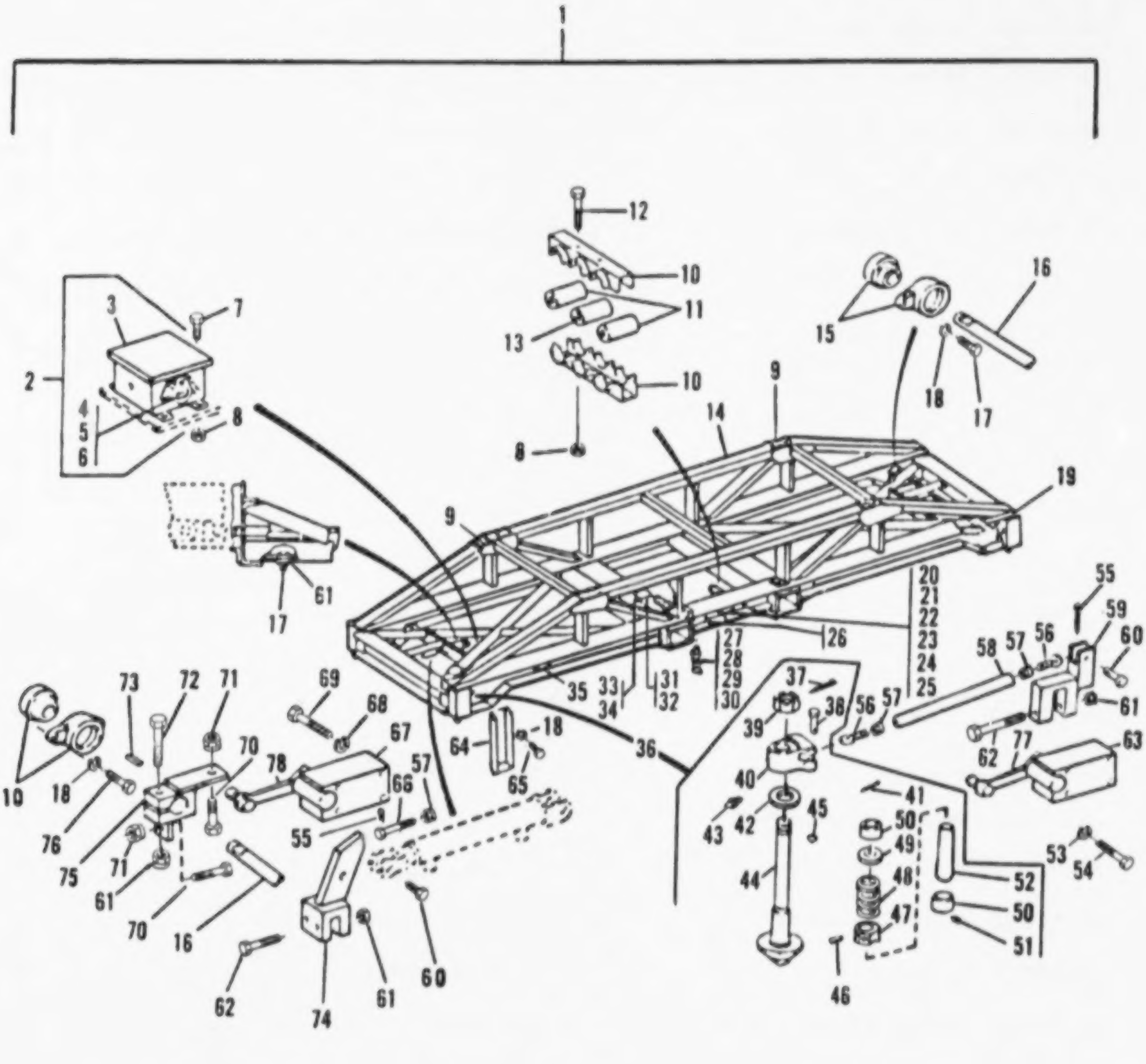

FIGURE 208. 35 FOOT TOPHANDLER

(1) ITEM NO	(2) SMR CODE	(3) CAGEC	(4) PART NUMBER	(5) DESCRIPTION AND USABLE ON CODES(UOC)	(6) QTY
				GROUP 3307: SPECIAL PURPOSE KITS	
				FIG. 208 35 FOOT TOPHANDLER	
1	XBOFF	65508	E9138	TOPHANDLER, 35 FT....................	1
2	PFFFZ	65508	D9289-1	.JUNCTION BOX.......................... UOC:V98	1
3	XBFZZ	52555	A9290-1	..JUNCTION BOX......................... UOC:V98	1
4	PFFZZ	52555	A9291-1	..ELECTRICAL SOCKET................... UOC:V98	1
5	PAFZZ	96906	MS90727-6	..BOLT,MACHINE........................ UOC:V98	3
6	PAFZZ	11083	2D6235	..NUT,SELF-LOCKING,HE................. UOC:V98	3
7	PAFZZ	11083	S1615	.BOLT,MACHINE......................... UOC:V98	8
8	PAFZZ	11083	2D6235	.NUT,SELF-LOCKING,HE.................. UOC:V98	42
9	PFOZZ	65508	A9457-1	.MARKER,IDENTIFICATI.................. UOC:V98	4
10	XBFZZ	52555	9564-1	.CLAMP ASSY........................... UOC:V98	16
11	PFFZZ	52555	A9563-1	.BUSHING,SPLIT........................ UOC:V98	32
12	PAFZZ	11083	1D4533	.BOLT,MACHINE......................... UOC:V98	32
13	PFFZZ	52555	A9563-2	.BUSHING,SPLIT........................ UOC:V98	16
14	XBFZZ	52555	9351-1	.FRAME CONSTRUCTION................... UOC:V98	1
15	PFFZZ	52555	A9412-1	.BEARING.............................. UOC:V98	6
16	PFFZZ	65508	C9346-1	.SHAFT,SHOULDERED..................... UOC:V98	2
17	PAFZZ	11083	0S1595	.BOLT,MACHINE......................... UOC:V98	8
18	PAFZZ	11083	3B4508	.WASHER,LOCK.......................... UOC:V98	8
19	XDFZZ	65508	3619-1	.GROMMET, RUBBER......................	4
20	PFFZZ	65508	A5920-1	.PLATE,IDENTIFICATIO.................. UOC:V98	2
21	PFOZZ	52555	B9123-1	.DECAL,SPREADER....................... UOC:V98	2
22	PFFZZ	65508	A9126-1	.MARKER,IDENTIFICATI.................. UOC:V98	2
23	PFFZZ	52555	A9125-1	.DECAL,TORQUE BOLTS................... UOC:V98	1
24	PFOZZ	52555	A9140-1	.DECAL,WARNING........................ UOC:V98	2
25	XBFZZ	65508	9426-1	.DECAL, LUBRICATION...................	2
26	PAFZZ	11083	9F7022	.BOLT,MACHINE.........................	8

(1) ITEM NO	(2) SMR CODE	(3) CAGEC	(4) PART NUMBER	(5) DESCRIPTION AND USABLE ON CODES(UOC)	(6) QTY
				UOC:V98	
27	PFFZZ	65508	B9408	.CHAIN ASSEMBLY,SING	2
				UOC:V98	
28	PFFZZ	96906	MS51964-136	..SETSCREW	1
				UOC:V99	
29	PFFZZ	52555	A9410-1	..SHACKLE	2
				UOC:V98	
30	XAFZZ	65508	A9411-1	..MASTER LINK	1
31	PAFZZ	11083	1A9579	.BOLT,MACHINE	4
				UOC:V98	
32	XAFZZ	11083	2R4821	.NUT, ELASTIC STOP	4
33	XDFZZ	11083	3B4504	.WASHER,LOCK	10
				UOC:V98	
34	PAFZZ	11083	1B2713	.BOLT,MACHINE	6
				UOC:V98	
35	PFOZZ	52555	C9124-1	.DECAL	2
				UOC:V98	
36	XBFFF	52555	9417-1	.TWISTLOCK ASSY	2
				UOC:V98	
37	PFFZZ	11083	3B4632	..PIN,COTTER	1
				UOC:V98	
38	PFFZZ	65508	B2364-2	..PIN,STRAIGHT,HEADED	1
				UOC:V98	
39	PAFZZ	96906	MS35692-105	..NUT,PLAIN,SLOTTED,H	1
				UOC:V98	
40	XDFZZ	52555	B9341-1	..ACTUATOR,TWISTLOCK	1
				UOC:V98	
41	PAFZZ	96906	MS24665-498	..PIN,COTTER	1
				UOC:V98	
42	XAFZZ	65508	A9419-1	..WASHER, SPHERICAL	1
43	PAFZZ	95879	1452	..FITTING,LUBRICATION	1
				UOC:V98	
44	PFFFF	65508	C3928-3	..BAYONET,SEALAND	1
				UOC:V98	
45	PAFZZ	96906	MS20066-381	..KEY,MACHINE	1
				UOC:V98	
46	XAFZZ	96906	MS90448-242	..PIN, SPIRAL	1
47	XBFFF	52555	B3779-1	..PLUNGER,LIMIT SWITC	1
				UOC:V98	
48	PFFZZ	52555	B3017-1	..SPRING,HELICAL,COMP	1
				UOC:V98	
49	PFFZZ	65508	A9419-1	..WASHER,CONVEX	1
				UOC:V98	
50	PFFZZ	65508	A9304-2	..BUSHING,SLEEVE	2
				UOC:V98	
51	PFFZZ	96906	MS51021-60	..SETSCREW	1
				UOC:V98	
52	PFFZZ	65508	B3777-3	..PLUNGER,SPECIAL	1
				UOC:V98	
53	PAFZZ	96906	MS35333-135	..WASHER,LOCK	2
				UOC:V98	
54	PAFZZ	11083	S1615	..BOLT,MACHINE	2

(1) ITEM NO	(2) SMR CODE	(3) CAGEC	(4) PART NUMBER	(5) DESCRIPTION AND USABLE ON CODES(UOC)	(6) QTY
				UOC:V98	
55	PAFZZ	96906	MS24665-353	.PIN,COTTER......................... UOC:V98	8
56	PFFZZ	52555	A9413-1	.ROD END............................ UOC:V98	8
57	PAFZZ	24617	145036	.NUT,SELF-LOCKING,HE................ UOC:V98	2
58	PFFZZ	65508	B2356-5	.CONNECTING LINK,RIG................ UOC:V98	4
59	PFFZZ	65508	C2510-1	.LEVER,LOCK RELEASE................. UOC:V98	4
60	PFFZZ	65508	B2364-1	.PIN,STRAIGHT,HEADED................ UOC:V98	4
61	PAFZZ	19207	443339	.NUT,SELF-LOCKING,HE................ UOC:V98	26
62	PAFZZ	11083	1D4566	.BOLT,MACHINE....................... UOC:V98	6
63	PFFZZ	65508	B6984-4	.SWITCH,SENSITIVE................... UOC:V53	4
64	PFFZZ	52555	C9231-1	.ALIGNING ARM....................... UOC:V98	2
65	PAFZZ	11083	1A1460	.BOLT,MACHINE....................... UOC:V98	8
66	PAFZZ	11083	S1577	.BOLT,MACHINE....................... UOC:V98	2
67	PFFZZ	65508	B6984-1	.SWITCH,SENSITIVE................... UOC:V53	2
68	XBFZZ	11083	MS3533-74	.LOCKWASHER......................... UOC:V53	4
69	PAFZZ	11083	8H3127	.SCREW,CAP,SOCKET HE................ UOC:V98	4
70	PAFZZ	96906	MS90727-115	.SCREW,CAP,HEXAGON H................ UOC:V98	4
71	PAFZZ	11083	1B4430	.NUT,PLAIN,HEXAGON.................. UOC:V98	4
72	PAFZZ	11083	L1329	.BOLT,MACHINE....................... UOC:V98	2
73	PAFZZ	96906	MS20066-304	.KEY,MACHINE........................ UOC:V98	2
74	PFFZZ	65508	C2571-2	.LEVER,MANUAL CONTRO................ UOC:V98	2
75	XDFZZ	52555	2355-1	.SWITCH,SENSITIVE................... UOC:V98	2
76	PAFZZ	11083	S1587	.BOLT,MACHINE....................... UOC:V98	4
77	XBFZZ	11083	B7085-1	.LEVER,ARM.......................... UOC:V53	4
78	XBFZZ	11083	A9307-1	.LEVER, LIMIT SWITCH................ UOC:V53	2

END OF FIGURE

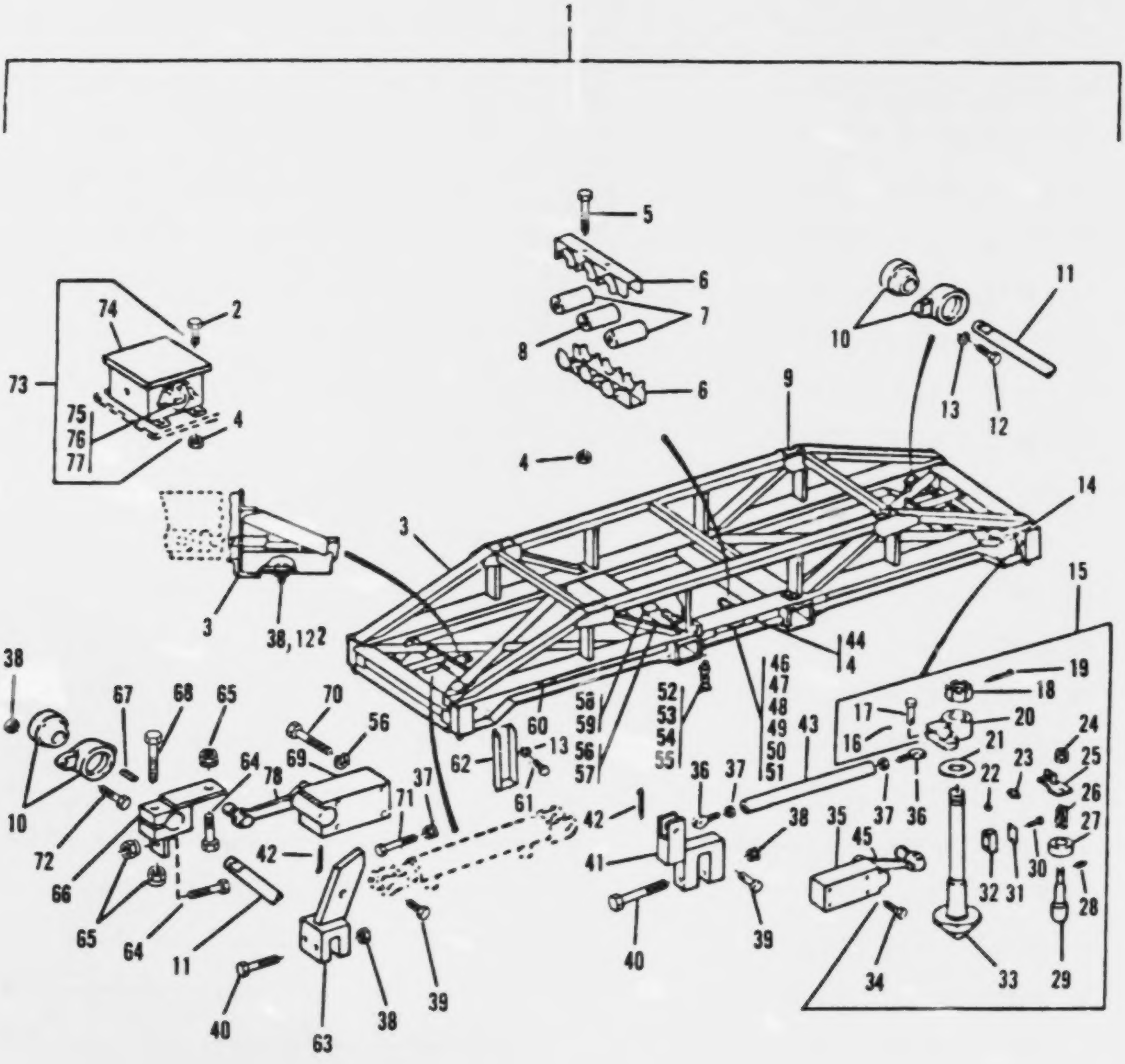

FIGURE 209. 40 FOOT TOPHANDLER

(1) ITEM NO	(2) SMR CODE	(3) CAGEC	(4) PART NUMBER	(5) DESCRIPTION AND USABLE ON CODES(UOC)	(6) QTY
				GROUP 3307: SPECIAL PURPOSE KITS	
				FIG. 209 40 FOOT TOPHANDLER	
1	XBCZZ	65508	9139	TOP HANDLER, 40 FT..................	1
2	PFFZZ	11083	S1615	.BOLT,MACHINE........................ UOC:V99	8
3	XBFZZ	52555	9322-1	.FRAME CONSTRUCTION.................. UOC:V99	1
4	XAFZZ	10083	2K4821	.NUT, ELASTIC STOP...................	4
5	PAFZZ	11083	1D4533	.BOLT,MACHINE........................ UOC:V99	30
6	PFFZZ	52555	A9564-1	.CLAMP ASSY.......................... UOC:V99	18
7	PFFZZ	52555	A9563-1	.BUSHING,SPLIT....................... UOC:V99	36
8	PFFZZ	52555	A9563-2	.BUSHING,SPLIT....................... UOC:V99	18
9	PFOZZ	65508	A9457-1	.MARKER,IDENTIFICATI................. UOC:V99	4
10	PFFZZ	52555	A9412-1	.BEARING............................. UOC:V99	6
11	PFFZZ	65508	B2702-1	.SHAFT,SHOULDERED.................... UOC:V99	2
12	PAFZZ	11083	S1587	.BOLT,MACHINE........................ UOC:V99	4
13	PAFZZ	80045	23MS35338-10	.WASHER,LOCK......................... UOC:V99	8
14	XAFZZ	65508	3619-1	.GROMMET, RUBBER.....................	4
15	PAOZZ	65508	9305-1	.LOCK ASSEMBLY,TWIST................. UOC:V99	2
15	PAOZZ	65508	9305-2	.LOCK ASSEMBLY,TWIST................. UOC:V99	2
16	XAFZZ	11083	3B4617	..PIN, COTTER........................	1
17	PFFZZ	65508	B2364-1	..PIN,STRAIGHT,HEADED................ UOC:V99	1
18	PAFZZ	96906	MS35692-105	..NUT,PLAIN,SLOTTED,H................ UOC:V99	1
19	XAFZZ	11083	3B5328	..PIN, COTTER........................	2
20	PFFZZ	65508	B2365-1	..LEVER,REMOTE CONTRO................ UOC:V99	1
21	PFFZZ	65508	A9313-1	..WASHER,FLAT........................ UOC:V99	1
22	PFFZZ	96906	MS20066-379	..KEY,MACHINE........................ UOC:V99	1
23	PAFZZ	96906	MS15003-1	..FITTING,LUBRICATION................ UOC:V99	1
24	PAFZZ	96906	MS21044-C10	..NUT,SELF-LOCKING,HE................ UOC:V99	1
25	PFFZZ	65508	B2892-1	..ARM,SWITCH ACTUATOR................ UOC:V99	1
26	PFFZZ	65508	B42214-1	..SPRING,HELICAL,COMP................	1

(1) ITEM NO	(2) SMR CODE	(3) CAGEC	(4) PART NUMBER	(5) DESCRIPTION AND USABLE ON CODES(UOC)	(6) QTY
				UOC:V99	
27	PFFZZ	65508	A9304-1	..BEARING,SLEEVE...................... UOC:V99	1
28	PFFZZ	96906	MS51964-136	..SETSCREW........................... UOC:V99	1
29	PFFZZ	65508	B3133-1	..PLUNGER,SWITCH...................... UOC:V99	1
30	PAFZZ	96906	MS24667-32L	..SCREW,CAP,SOCKET HE.................. UOC:V99	2
31	XDFZZ	52555	B2913-1	..SHIM................................ UOC:V99	6
32	PFFZZ	65508	B3128-1	..STOP,ELECTRICAL SWI.................. UOC:V99	1
33	PFFZZ	52555	C46806-1	..BAYONET,SPEADER..................... UOC:V99	1
34	PFFZZ	11083	8H3128	..BOLT,INTERNAL WRENC.................. UOC:V99	2
35	PAOZZ	52555	B6984-4	.SWITCH,SENSITIVE..................... UOC:V99	4
36	PFFZZ	52555	A9413-1	.ROD END.............................. UOC:V99	8
37	PAFZZ	24617	145036	.NUT,SELF-LOCKING,HE.................. UOC:V99	2
38	PAFZZ	19207	443339	.NUT,SELF-LOCKING,HE.................. UOC:V99	26
39	PFFZZ	52555	2364-1	.PIN,CLEVIS........................... UOC:V99	8
40	PAFZZ	11083	1D4566	.BOLT,MACHINE......................... UOC:V99	6
41	PFFZZ	65508	C2510-1	.LEVER,LOCK RELEASE................... UOC:V99	4
42	PAFZZ	96906	MS24665-353	.PIN,COTTER........................... UOC:V99	8
43	PFFZZ	65508	2356-1	.PIN,STRAIGHT,HEADLE.................. UOC:V99	4
44	PAFZZ	11083	9F7022	.BOLT,MACHINE......................... UOC:V99	8
45	PFFZZ	11083	A9307-2	.LEVER,LIMIT SWITCH................... UOC:V99	4
46	XBFZZ	65508	5920-1	.PLATE, NAME..........................	2
47	PFOZZ	52555	B9123-1	.DECAL,SPREADER....................... UOC:V99	2
48	PFFZZ	65508	A9126-1	.MARKER,IDENTIFICATI.................. UOC:V99	2
49	PFFZZ	52555	A9125-1	.DECAL,TORQUE BOLTS................... UOC:V99	2
50	PFOZZ	52555	A9140-1	.DECAL,WARNING........................ UOC:V99	2
51	PFOZZ	52555	C9426-1	.DECAL,LUBRICATION.................... UOC:V99	2
52	PFFZZ	65508	9408-1	.CHAIN ASSEMBLY,SING.................. UOC:V99	2

(1) ITEM NO	(2) SMR CODE	(3) CAGEC	(4) PART NUMBER	(5) DESCRIPTION AND USABLE ON CODES(UOC)	(6) QTY
53	XAFZZ	65508	A9409-1	..CHAIN, 5 8 X 9 LINK................	2
54	PFFZZ	52555	A9410-1	..SHACKLE............................. UOC:V99	2
55	XAFZZ	52555	A9411-1	..MASTER LINK.........................	2
56	PFFZZ	41226	4347	.WASHER,LOCK.......................... UOC:V99	10
57	PAFZZ	11083	2A5546	.BOLT,MACHINE......................... UOC:V99	6
58	XAFZZ	11083	2K4821	.NUT, ELASTIC STOP....................	4
59	PAFZZ	11083	1A9579	.BOLT,MACHINE......................... UOC:V99	4
60	PFOZZ	52555	C9124-1	.DECAL................................ UOC:V99	2
61	PAOZZ	11083	1A1460	.BOLT,MACHINE......................... UOC:V99	8
62	PFFZZ	52555	C9231	.ALIGNING ARM......................... UOC:V99	2
63	PFFZZ	65508	C2571-2	.LEVER,MANUAL CONTRO.................. UOC:V99	2
64	XAFZZ	11083	0L1329	.SCREW, CAP,HEX HEAD..................	2
65	PAFZZ	11083	1B4430	.NUT,PLAIN,HEXAGON.................... UOC:V99	4
66	XDFZZ	52555	2355-1	.SWITCH,SENSITIVE..................... UOC:V99	2
67	PAFZZ	96906	MS20066-304	.KEY,MACHINE.......................... UOC:V99	2
68	PAFZZ	11083	L1329	.BOLT,MACHINE......................... UOC:V99	2
68	PAFZZ	96906	MS90727-115	.SCREW,CAP,HEXAGON H.................. UOC:V99	4
69	PAOZZ	65508	B6984-1	.SWITCH,SENSITIVE..................... UOC:V99	1
70	PAFZZ	11083	S1615	.BOLT,MACHINE......................... UOC:V99	4
71	PAFZZ	11083	S1577	.BOLT,MACHINE......................... UOC:V99	2
72	PAFZZ	11083	0S1595	.BOLT,MACHINE......................... UOC:V99	8
73	PFFFZ	65508	D9289-1	.JUNCTION BOX......................... UOC:V99	1
74	XBFZZ	52555	A9290-1	..JUNCTION BOX........................ UOC:V99	1
75	PAOZZ	52555	A9291-1	..ELECTRICAL SOCKET................... UOC:V99	1
76	PAFZZ	96906	MS90727-6	..BOLT,MACHINE........................ UOC:V99	3
77	PAFZZ	11083	2D6235	..NUT,SELF-LOCKING,HE................. UOC:V99	3
78	PFFZZ	65508	A9307-2	.LEVER,REMOTE CONTRO.................. UOC:V99	1

END OF FIGURE

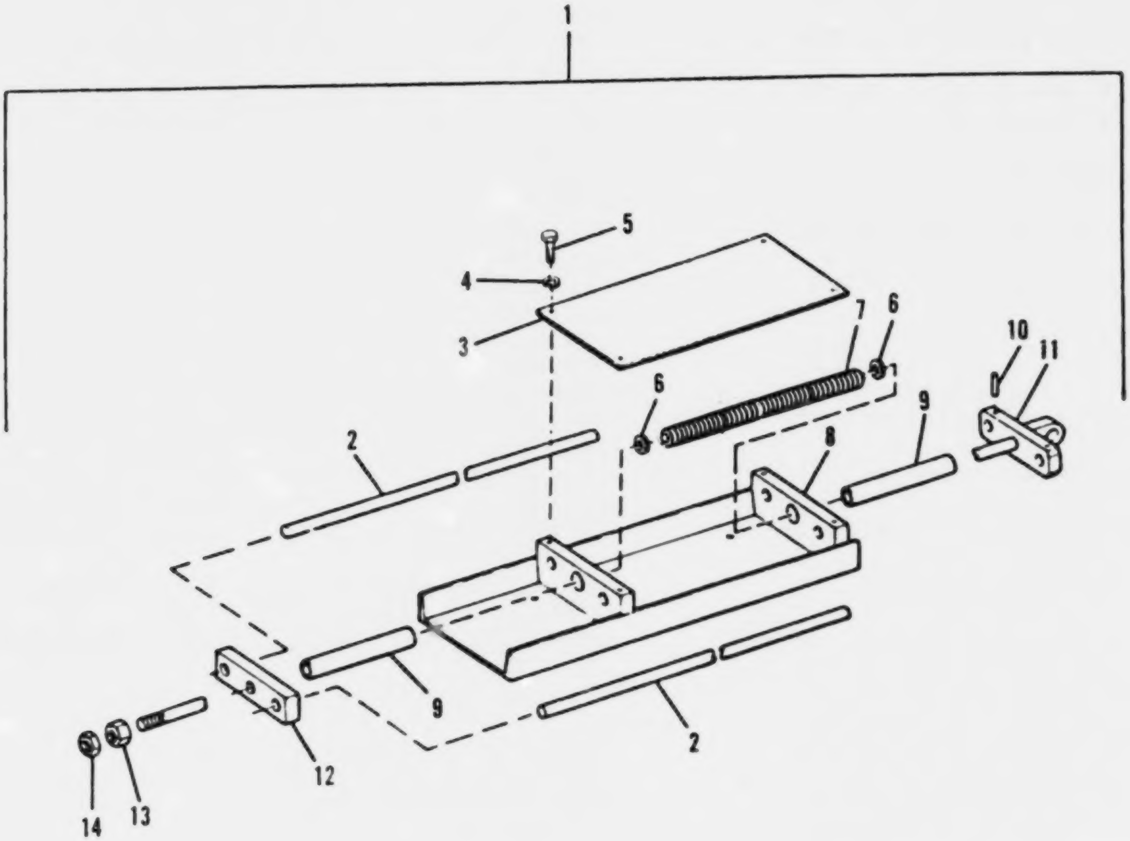

FIGURE 210. FORCE LIMITER 20 FOOT

(1) ITEM NO	(2) SMR CODE	(3) CAGEC	(4) PART NUMBER	(5) DESCRIPTION AND USABLE ON CODES(UCC)	(6) QTY
				GROUP 3307: SPECIAL PURPOSE KITS	
				FIG. 210 FORCE LIMITER 20 FOOT	
1	PFFFF	52555	8675-1	FORCE LIMITER ASSY.................. UOC:V97	1
1	PFFFF	52555	D98151	FORCE LIMITER ASSY.................. UOC:V98	2
2	PFFZZ	65508	A8293-1	.ROD,STRAIGHT,HEADLE................ UOC:V97	2
3	PFFZZ	65508	A8287-1	.COVER,ACCESS....................... UOC:V97	1
4	PAFZZ	96906	MS35335-33	.WASHER,LOCK........................ UOC:V97	4
5	PAFZZ	96906	MS90728-1	.SCREW,CAP,HEXAGON H................ UOC:V97	4
6	XAFZZ	52555	A8288-1	.WASHER.............................	2
7	PFFZZ	65508	A9296-1	.SPRING,HELICAL,COMP................ UOC:V97	4
8	PFFZZ	52555	D8674	.SPRING MOUNT CONSTR................ UOC:V97	1
8	PFFZZ	65508	D10269-1	.PLATE,RETAINING,SHA................ UOC:V98	1
9	XBFZZ	52555	A8306-1	.SPACER............................. UOC:V97	2
10	PAFZZ	96906	MS16562-279	.PIN,SPRING......................... UOC:V97	2
11	PFFZZ	65508	B8290-1	.CONNECTOR,ROD END.................. UOC:V97	1
12	PFFZZ	65508	A8291-1	.CONNECTING LINK,RIG................ UOC:V97	1
12	XBFZZ	52555	A8306-1	.SPACER............................. UOC:V98	2
13	PAFZZ	96906	MS51971-10	.NUT,PLAIN,HEXAGON.................. UOC:V97	1
14	PAFZZ	96906	MS35691-74	.NUT,PLAIN,HEXAGON.................. UOC:V97	1

END OF FIGURE

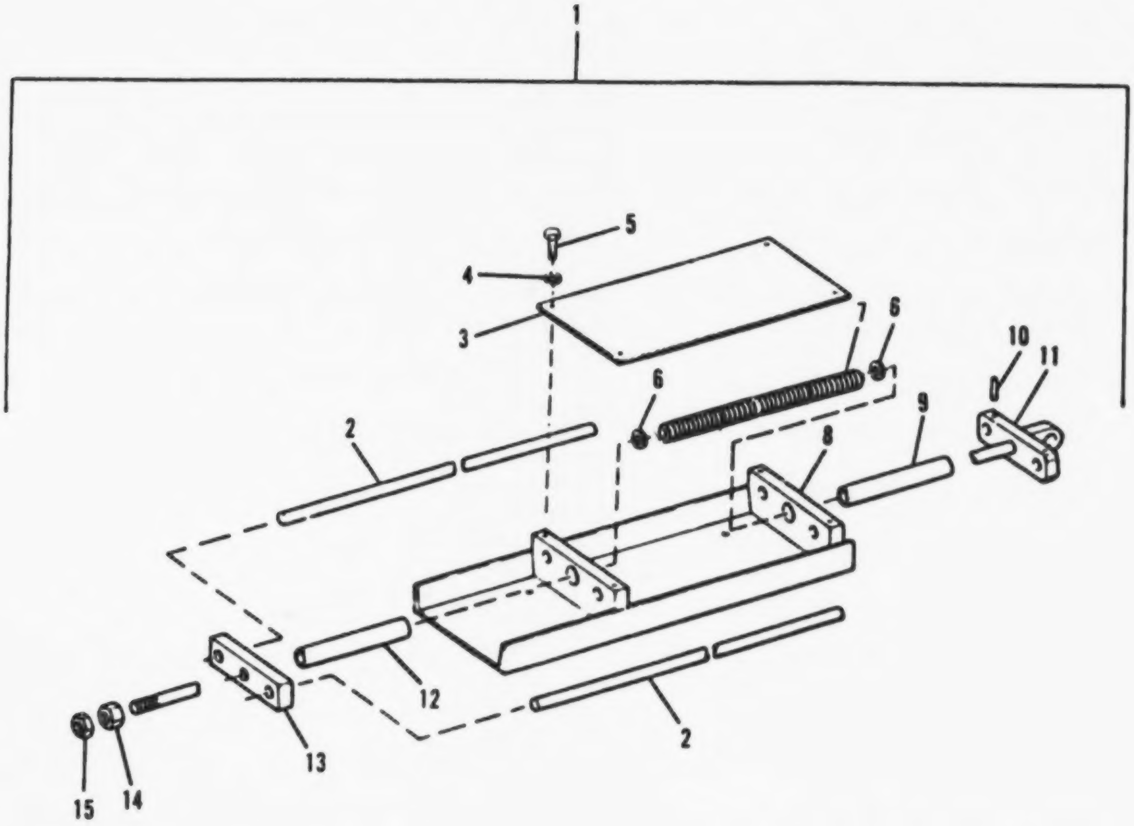

FIGURE 211. FORCE LIMITER 35 FOOT

(1) ITEM NO	(2) SMR CODE	(3) CAGEC	(4) PART NUMBER	(5) DESCRIPTION AND USABLE ON CODES(UOC)	(6) QTY
				GROUP 3307: SPECIAL PURPOSE KITS	
				FIG. 211 FORCE LIMITER 35 FOOT	
1	XBFZZ	66508	9815	FORCE LIMIT ASSY......................	2
2	PFFZZ	65508	A8293-1	.ROD,STRAIGHT,HEADLE................ UOC:V98	2
3	PFFZZ	65508	A8287-1	.COVER,ACCESS....................... UOC:V98	1
4	PAFZZ	96906	MS35335-33	.WASHER,LOCK........................ UOC:V98	4
5	PAFZZ	96906	MS90728-1	.SCREW,CAP,HEXAGON H................ UOC:V98	4
6	XAFZZ	52555	A8288-1	.WASHER.............................	2
7	PFFZZ	65508	A9296-1	.SPRING,HELICAL,COMP................ UOC:V98	4
8	XBFZZ	52555	10269-1	.SPRING, MOUNT CONST................	2
9	XBFZZ	52555	A9814-1	.SPACER............................. UOC:V98	1
10	PAFZZ	96906	MS16562-279	.PIN,SPRING......................... UOC:V98	2
11	PFFZZ	65508	B8290-1	.CONNECTOR,ROD END.................. UOC:V98	1
12	XBFFF	52555	A8306-1	.SPACER.............................	1
13	PFFZZ	65508	A8291-1	.CONNECTING LINK,RIG................ UOC:V98	1
14	PAFZZ	96906	MS51971-10	.NUT,PLAIN,HEXAGON.................. UOC:V98	1
15	PAFZZ	96906	MS35691-74	.NUT,PLAIN,HEXAGON.................. UOC:V98	1

END OF FIGURE

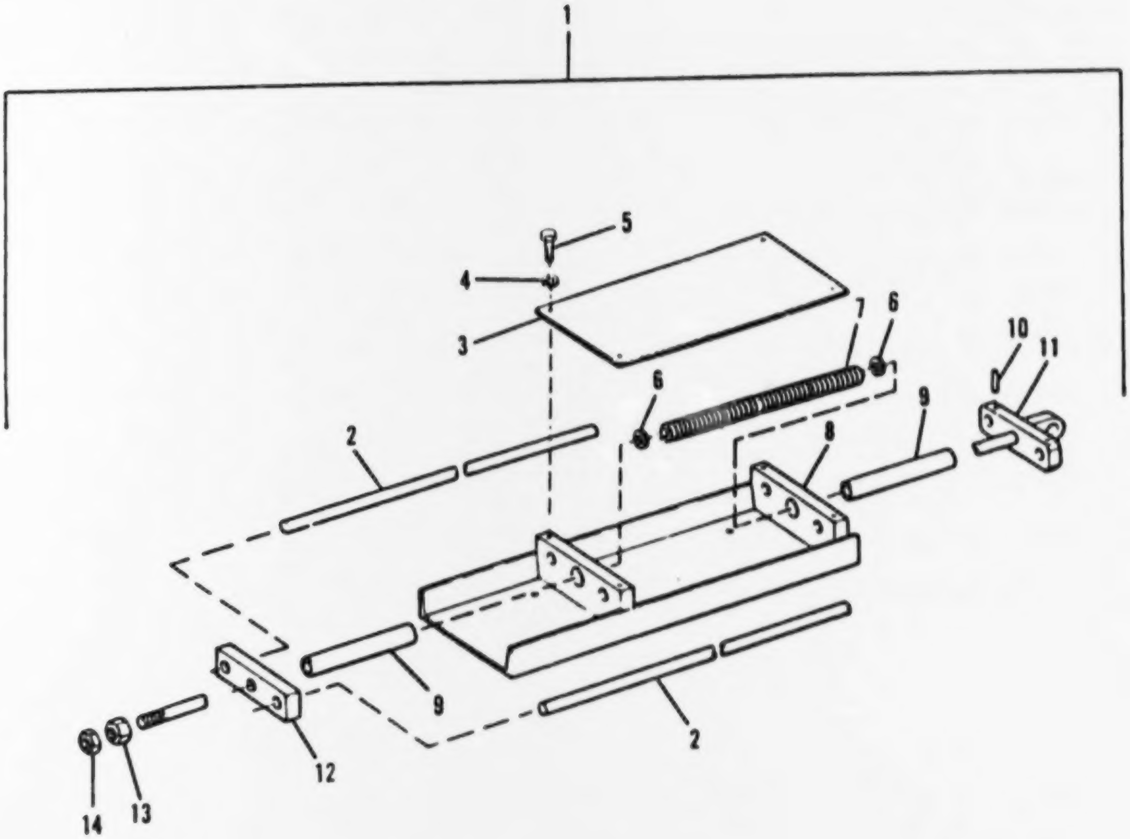

FIGURF ^:2. FORCE LIMITER 40 FOOT

(1) ITEM NO	(2) SMR CODE	(3) CAGEC	(4) PART NUMBER	(5) DESCRIPTION AND USABLE ON CODES(UOC)	(6) QTY
				GROUP 3307: SPECIAL PURPOSE KITS	
				FIG. 212 FORCE LIMITER 40 FOOT	
1	PFFZF	65508	A9381-1	CYLINDER ASSEMBLY,A.................. UOC:V97	1
2	PFFZZ	65508	A8293-1	.ROD,STRAIGHT,HEADLE................ UOC:V99	2
3	PFFZZ	65508	A8287-1	.COVER,ACCESS....................... UOC:V99	1
4	PAFZZ	96906	MS35335-33	.WASHER,LOCK........................ UOC:V99	4
5	PAFZZ	96906	MS90728-1	.SCREW,CAP,HEXAGON H................ UOC:V99	4
6	XAFZZ	52555	A8288-1	.WASHER.............................	2
7	PFFZZ	65508	A9296-1	.SPRING,HELICAL,COMP................ UOC:V99	4
8	PFFZZ	65508	D8307-1	.MOUNT,SPRING....................... UOC:V99	1
9	XAFZZ	52555	A8306-1	.SPACER.............................	2
10	PAFZZ	96906	MS16562-279	.PIN,SPRING......................... UOC:V99	2
11	PFFZZ	65508	B8290-1	.CONNECTOR,ROD END.................. UOC:V99	1
12	PFFZZ	65508	A8291-1	.CONNECTING LINK,RIG................ UOC:V99	1
13	PAFZZ	96906	MS51971-10	.NUT,PLAIN,HEXAGON.................. UOC:V99	1
14	PAFZZ	96906	MS35691-74	.NUT,PLAIN,HEXAGON.................. UOC:V99	1

END OF FIGURE

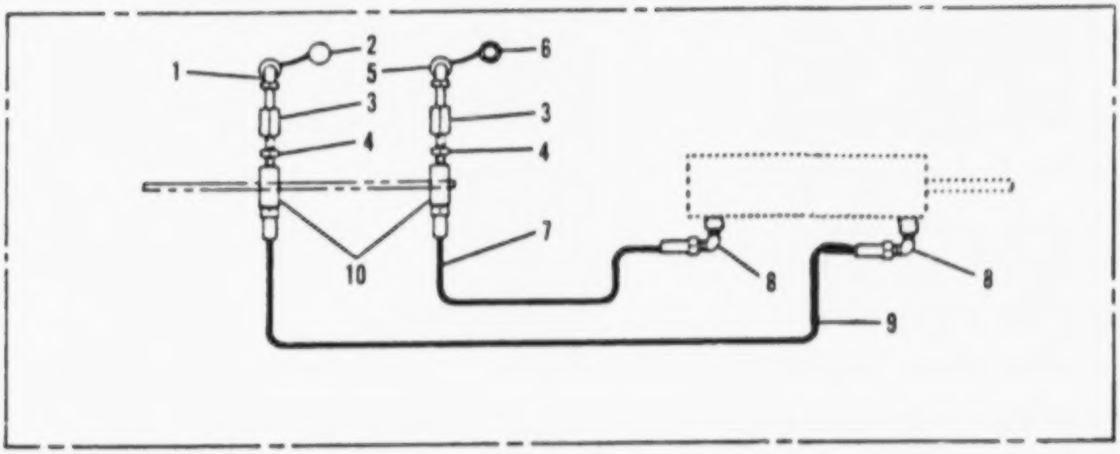

FIGURE 213. HYDRAULIC LINES (SCHEMATIC) 20 FOOT

(1) ITEM NO	(2) SMR CODE	(3) CAGEC	(4) PART NUMBER	(5) DESCRIPTION AND USABLE ON CODES(UOC)	(6) QTY
				GROUP 3307: SPECIAL PURPOSE KITS	
				FIG. 213 HYDRAULIC LINES (SCHEMATIC) 20 FOOT	
1	PAOZZ	65508	A9377-1	.COUPLING HALF,QUICK................. UOC:V97	1
2	PAOZZ	65508	A9378-1	.CAP,PROTECTIVE,DUST................. UOC:V97	1
3	XDFZZ	52555	A9385-1	.PIPE ADAPTER,FEMALE................. UOC:V97	2
4	XDFZZ	52555	A9308-1	.NIPPLE,PIPE......................... UOC:V97	2
5	PAOZZ	65508	A9379-1	.COUPLING HALF,QUICK................. UOC:V97	1
6	XDOZZ	52555	A9380-1	.PLUG,PROTECTIVE,DUS................. UOC:V97	1
7	PFFZZ	52555	B9399-1	.HOSE ASSY........................... UOC:V97	1
8	PFFZZ	96906	MS51504A8-8	.ELBOW,PIPE TO TUBE.................. UOC:V97	2
9	PFFZZ	65508	B9399-2	.HOSE ASSEMBLY,METAL................. UOC:V97	1
10	PFFZZ	52555	A9387-1	.ADAPTER,STRAIGHT,PI................. UOC:V97	2

END OF FIGURE

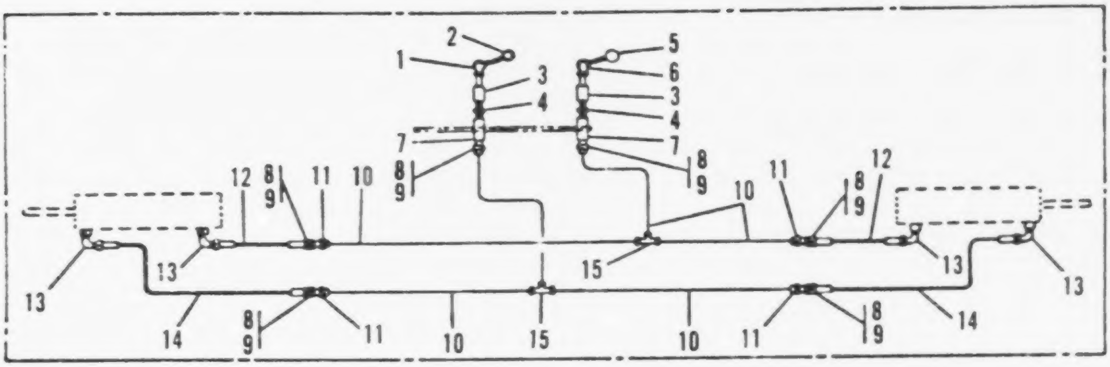

FIGURE 214. HYDRAULIC LINES (SCHEMATIC) 35 FOOT

(1) ITEM NO	(2) SMR CODE	(3) CAGEC	(4) PART NUMBER	(5) DESCRIPTION AND USABLE CN CODES(UOC)	(6) CTY
				GRCUP 3307: SPECIAL PLFFCSE KITS	
				FIG. 214 HYDRAULIC LINES (SCHEMATIC) 35 FCCT	
1	PFFZZ	65508	A9377-1	.CCLPLING HALF,QUICK................. LCC:VS8	1
2	PFOZZ	65508	A9378-1	.CAP,PRCTECTIVE,DUST................. UCC:VS8	1
3	XDFZZ	52555	A9385-1	.PIPE ADAPTER,FEMALE................. UCC:VS8	2
3	PFFZZ	30708	8-3-8F5-GSS	.PIFE ACAPTER,FEMALE................. UCC:VS8	2
4	XBFZZ	52555	A9378-1	.NIPPLE, TUBE........................	2
5	XDOZZ	52555	A9380-1	.PLLG,PRCTECTIVE,DUS................. LCC:V98	1
6	PFFZZ	65508	A9379-1	.CCLPLING HALF,QUICK................. UOC:VS8	1
7	PFFZZ	30780	8WGBTX-S	.ADAPTER,STRAIGHT,PI................. UCC:VS8	2
8	PFFZZ	65508	A9386-1	.NLT,PLAIN,HEXAGON................... UCC:V98	6
9	PFFZZ	79470	C5165X8	.SLEEVE,FLARED,TUBE.................. UCC:V98	6
10	MOFZZ	11083	5P191	.HYCRAULIC TUBING MAKE FROM P/N 5P1S1................................	V
10	XAFZZ	11C83	5P1S1	HYDRAULIC TUBING.....................	1
10	XAFZZ	11C83	5P1S1	HYDRAULIC TUBING.....................	1
11	XDFZZ	52555	A9389-1	.UNICN,TEE........................... UCC:VS8	4
12	PFFZZ	65508	B9382-1	.HCSE ASSEMBLY,NONME................. LCC:VS8	2
13	XBFZZ	52555	A9384-1	.ELBOW............................... LCC:V98	4
14	PFFZZ	65508	B9382-2	.HCSE ASSEMBLY,NONME................. LCC:V98	2
15	PFFZZ	98441	8JBTXS	.TEE,TUBE............................ UCC:VS8	2

END OF FIGURE

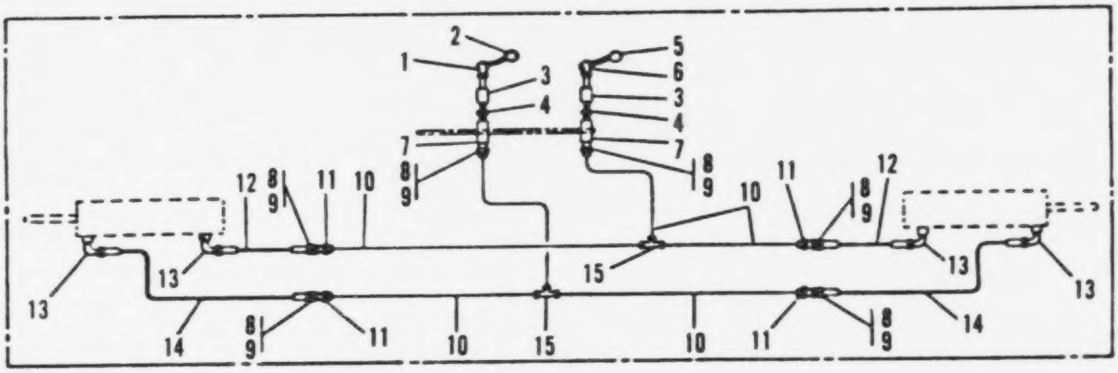

FIGURE 215. HYDRAULIC LINES (SCHEMATIC) 40 FOOT

(1) ITEM NO	(2) SMR CODE	(3) CAGEC	(4) PART NUMBER	(5) DESCRIPTION AND USABLE ON CODES(UOC)	(6) QTY
				GROUP 3307: SPECIAL PURPOSE KITS	
				FIG. 215 HYDRAULIC LINES (SCHEMATIC) 40 FOOT	
1	PAOZZ	65508	A9377-1	COUPLING HALF,QUICK.................. UOC:V99	1
1	PFFFF	65508	A9381-1	CYLINDER ASSEMBLY,A.................. UOC:V99	2
2	PAOZZ	65508	A9378-1	CAP,PROTECTIVE,DUST.................. UOC:V99	1
3	XDFZZ	52555	A9385-1	PIPE ADAPTER,FEMALE.................. UOC:V99	2
4	XDFZZ	52555	A9308-1	NIPPLE,PIPE.......................... UOC:V99	2
5	XDOZZ	52555	A9380-1	PLUG,PROTECTIVE,DUS.................. UOC:V99	1
6	PAOZZ	65508	A9379-1	COUPLING HALF,QUICK.................. UOC:V99	1
7	PFFZZ	52555	A9387-1	ADAPTER,STRAIGHT,PI.................. UOC:V99	2
8	PFFZZ	65508	A9386-1	NUT,PLAIN,HEXAGON.................... UOC:V99	6
9	PFFZZ	52555	A9390-1	SLEEVE............................... UOC:V99	6
10	MOFZZ	11083	5P191	HYDRAULIC TUBING MAKE FROM P/N 5P191................................	V
11	XDFZZ	52555	A9389-1	UNION,TEE............................ UOC:V99	4
12	PFFZZ	65508	B9382-1	HOSE ASSEMBLY,NONME.................. UOC:V99	2
13	PFFZZ	81343	8-8 070202CA(CAD)	ELBOW,PIPE TO TUBE................... UOC:V99	4
14	PFFZZ	65508	B9382-2	HOSE ASSEMBLY,NONME.................. UOC:V99	2
15	PFFZZ	52555	A9388-1	UNION,TEE............................ UOC:V99	2

END OF FIGURE

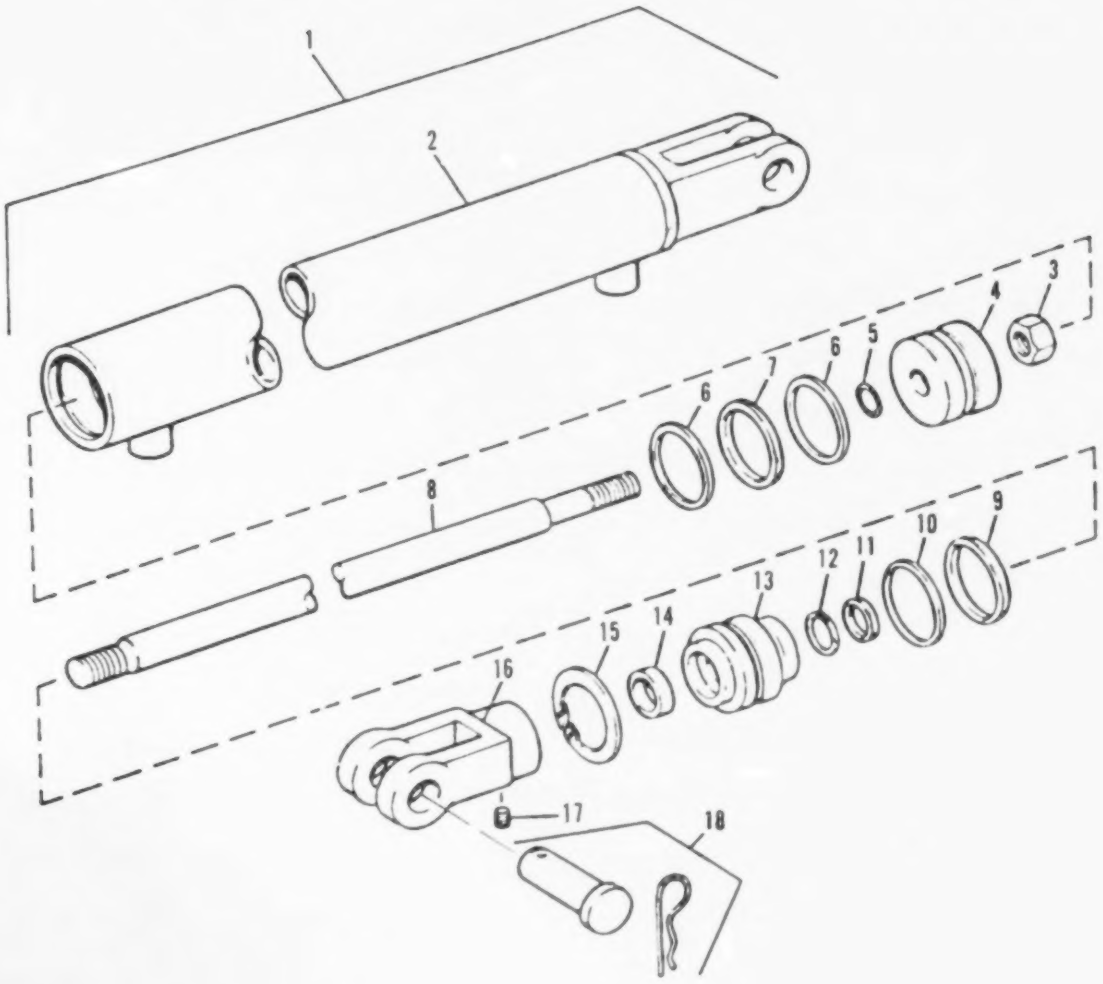

FIGURE 216. HYDRAULIC CYLINDER (TOPHANDLER)

(1) ITEM NO	(2) SMR CODE	(3) CAGEC	(4) PART NUMBER	(5) DESCRIPTION AND USABLE ON CODES(UOC)	(6) QTY
				GROUP 3307: SPECIAL PURPOSE KITS	
				FIG. 216 HYDRAULIC CYLINDER (TOPHANDLER)	
1	PAFHH	16294	WFC-2006	CYLINDER ASSEMBLY,A................. UOC:V97,V98,V99	1
2	XBFZZ	11083	WF20-2A-60	CYLINDER BODY......................... UOC:V53	1
3	XAFZZ	16294	10307	.LOCKNUT..............................	1
4	XBFZZ	16294	WM20-51	.PISTON...............................	1
5	XAFZZ	16294	10815-114	.O-RING...............................	1
6	XAFZZ	16294	10824-326	.BACK-UP RING.........................	2
7	XAFZZ	16294	10815-326	.O-RING...............................	1
8	XBFZZ	11083	WF20-4-60	.PISTON ROD........................... UOC:V53	1
9	XAFZZ	16294	10815-224	.O-RING...............................	1
10	XAFZZ	16294	10822-214	.BACK-UP RING.........................	1
11	XAFZZ	16294	10815-214	.O-RING...............................	1
12	XAFZZ	16294	10822-214	.BACK-UP RINGS........................	1
13	XBFZZ	11083	WM20-3	.CYLINDER HEAD........................ UOC:V53	1
14	XBFZZ	11083	10309	.ROD WIPER............................ UOC:V53	1
15	XAFZZ	16294	10270	.SNAP RING............................	1
16	XBFZZ	11083	WM25-9	.CLEVIS............................... UOC:V53	1
17	XAFZZ	16294	10223	.SETSCREW.............................	1
18	XAFZZ	16294	10500	.PIN AND CLIP ASSY....................	1
19	XAFZZ	11083	S509	BOLT..................................	1

END OF FIGURE

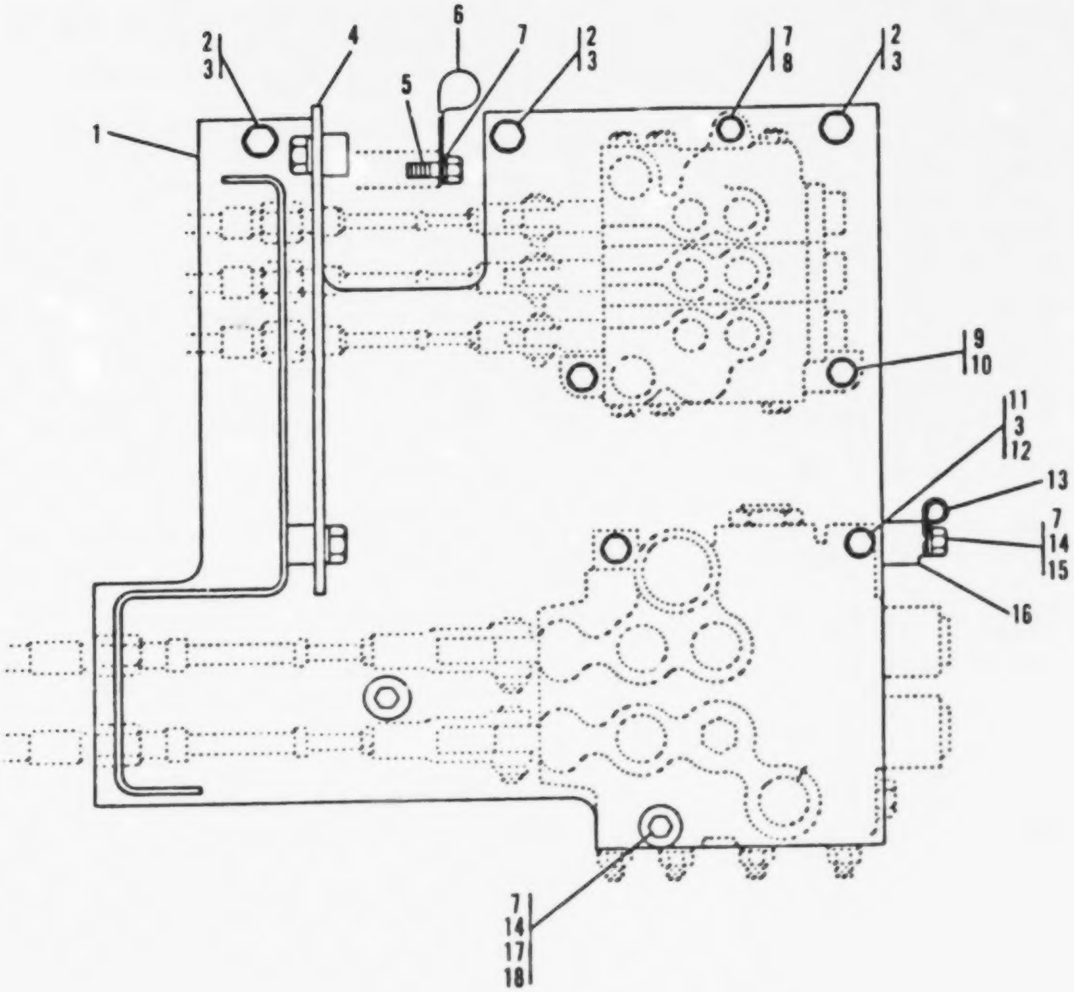

FIGURE 217. HYDRAULIC VALVES MOUNTING GROUP

(1) ITEM NO	(2) SMR CODE	(3) CAGEC	(4) PART NUMBER	(5) DESCRIPTION AND USABLE ON CODES(UOC)	(6) QTY
				GROUP 43: HYDRAULIC, FLUID, AIR AND VACUUM SYSTEM	
				GROUP 4305: MANIFOLD AND/OR CONTROL VALVES	
				FIG. 217 HYDRAULIC VALVES MOUNTING GROUP	
1	XDFZZ	11083	5R4346	PLATE ASSY........................... UOC:V53	1
2	PAOZZ	11083	2H3855	BOLT,MACHINE......................... UOC:V53	5
3	PAFZZ	11083	5P8245	WASHER,FLAT.......................... UOC:V53	7
4	XDFZZ	11083	5R4348	PLATE................................ UOC:V53	1
5	PAFZZ	96906	MS90728-63	SCREW,CAP,HEXAGON H.................. UOC:V53	1
6	XBFZZ	11083	1P7009	CLIP................................. UOC:V53	1
7	PAOHH	11083	5M2894	WASHER,FLAT.......................... UOC:V53	2
8	PAOHH	11083	0S1588	BOLT................................. UOC:V53	1
9	PAFZZ	11083	T320	BOLT,MACHINE......................... UOC:V53	2
10	PAOHH	11083	5P8244	WASHER,FLAT.......................... UOC:V53	2
11	PAFZZ	11083	9S1366	BOLT,MACHINE......................... UOC:V53	2
12	PAFZZ	12603	61D8	NUT,PLAIN,HEXAGON.................... UOC:V53	2
13	PAFZZ	11083	4D7794	CLAMP,LOOP........................... UOC:V53	1
14	PAFZZ	15564	1377A	NUT,PLAIN,HEXAGON.................... UOC:V53	2
15	XAFZZ	11083	S509	BOLT................................. UOC:V53	1
16	XBFZZ	11083	3R5883	BRACKET.............................. UOC:V53	1
17	PAOZZ	24617	73342	WASHER,FLAT.......................... UOC:V53	1
18	PAFZZ	11083	L2070	BOLT,MACHINE......................... UOC:V53	1

END OF FIGURE

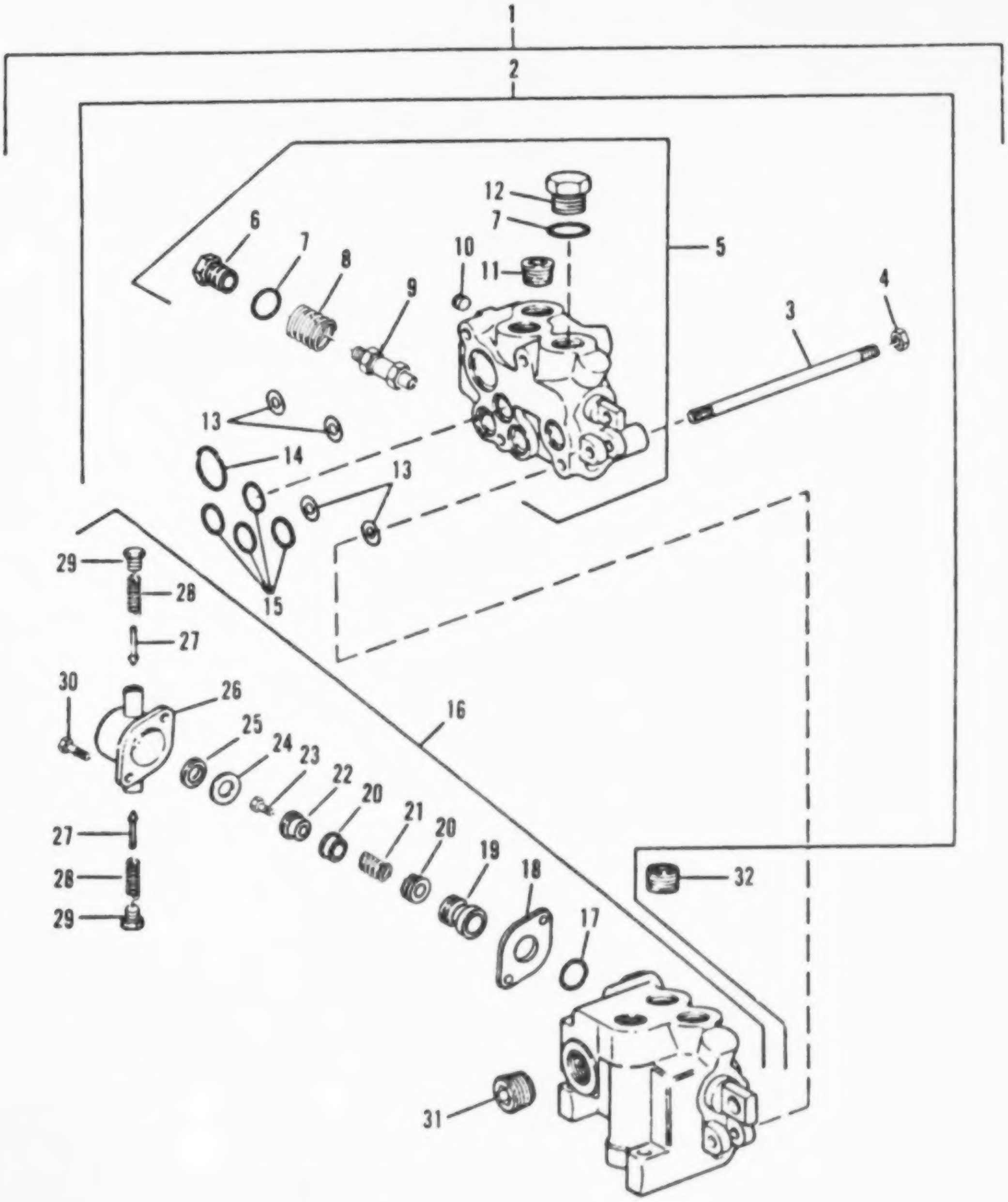

FIGURE 218. LIFT AND TILT VALVE ASSEMBLY

(1) ITEM NO	(2) SMR CODE	(3) CAGEC	(4) PART NUMBER	(5) DESCRIPTION AND USABLE ON CODES(UOC)	(6) QTY
				GROUP 4305: MANIFOLD AND/OR CONTROL VALVES	
				FIG. 218 LIFT AND TILT VALVE ASSEMBLY	
1	XDFHH	11083	5R4505	VALVE GRP............................. UOC:V53	1
2	XBHHH	11083	5R4506	.VALVE GRP............................ UOC:V53	1
3	XDHZZ	62983	242092	..STUD................................ UOC:V53	4
4	XDHZZ	62983	1458	..NUT,PLAIN,HEXAGON................... UOC:V53	4
5	XDHHH	62983	313921	..DIRECTIONAL VALVE A................. UOC:V53	1
6	PAHZZ	62983	313868	...PLUG,MACHINE THREAD................ UOC:V53	1
7	PAHZZ	03956	1877528	...PACKING,PREFORMED.................. UOC:V53	1
8	PAHZZ	62983	238834	...SPRING,HELICAL,COMP................ UOC:V53	1
9	PAHZZ	62983	319701	...VALVE,CONTROL...................... UOC:V53	1
10	XDHZZ	62983	7074	...PLUG............................... UOC:V53	1
11	PAHZZ	62983	319962	...PLUG,MACHINE THREAD................ UOC:V53	1
12	PFHZZ	62983	194843	...PLUG,MACHINE THREAD................ UOC:V53	1
13	PAHZZ	62983	307197	...SHIM............................... UOC:V53	5
14	PAHZZ	62983	226163	...PACKING,PREFORMED.................. UOC:V53	1
15	PAHZZ	62983	226157	...PACKING,PREFORMED.................. UOC:V53	4
16	XDHHH	62983	313844	..DIRECTIONAL VALVE S................. UOC:V53	1
17	PAHZZ	62983	154018	...PACKING,PREFORMED.................. UOC:V53	1
18	PAHZZ	62983	242076	...GASKET............................. UOC:V53	1
19	XBHZZ	62983	252615	...DETENT............................. UOC:V53	1
20	XDHZZ	62983	206086	...VALVE,RETAINER..................... UOC:V53	2
21	PAHZZ	62983	206772	...SPRING,HELICAL,COMP................ UOC:V53	1
22	PAHZZ	62983	242079	...BUSHING,SLEEVE..................... UOC:V53	1
23	PAHZZ	62983	1050	...SCREW.............................. UOC:V53	1

(1) ITEM NO	(2) SMR CODE	(3) CAGEC	(4) PART NUMBER	(5) DESCRIPTION AND USABLE ON CODES(UOC)	(6) QTY
24	PAHZZ	62983	252523	...WASHER,FLAT UOC:V53	1
25	XDOZZ	62983	237824	...RING,RETAINING UOC:V53	1
26	PAHZZ	62983	252509	...CAP-DETENT C SPOOL UOC:V53	1
27	XAHZZ	62983	235415	...PISTON FLOAT DETENT UOC:V53	1
28	PAHZZ	62983	238085	...SPRING,HELICAL,COMP UOC:V53	1
29	PAHZZ	62983	235416	...PLUG UOC:V53	1
30	PFHZZ	62983	1250	...SCREW,MACHINE UOC:V53	2
31	PAHZZ	62983	7078	...PLUG,PIPE UOC:V53	1
31	PAHZZ	10001	12Z329PC93	...PLUG,PIPE UOC:V53	1
32	XDHZZ	11083	694448	.PLUG UOC:V53	1

END OF FIGURE

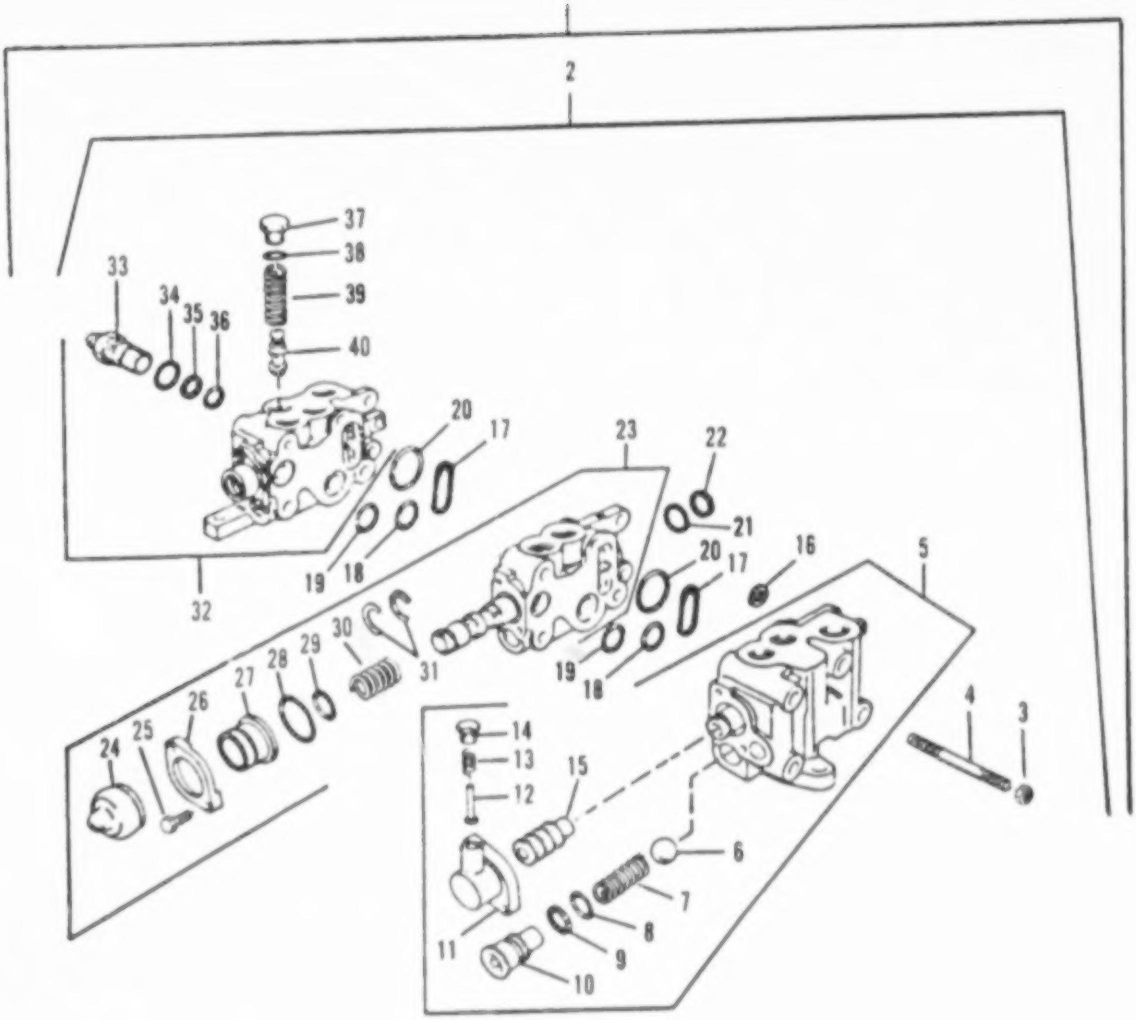

FIGURE 219. CARRIAGE VALVE ASSEMBLY

(1) ITEM NO	(2) SMR CODE	(3) CAGEC	(4) PART NUMBER	(5) DESCRIPTION AND USABLE ON CODES(UOC)	(6) QTY
				GROUP 4305: MANIFOLD AND/OR CONTROL VALVES	
				FIG. 219 CARRIAGE VALVE ASSEMBLY	
1	XDHHH	11083	5R4507	VALVE GRP........................... UOC:V53	1
2	XDHHH	62983	283785	.VALVE ASSY.......................... UOC:V53	1
3	PAHZZ	62983	1454	..NUT,PLAIN,HEXAGON.................. UOC:V53	8
4	PFHZZ	62983	223153	..STUD............................... UOC:V53	4
5	XAFFF	62983	283785	..VALVE ASSY......................... UOC:V53	1
6	PAHZZ	62983	1656	...BALL,BEARING...................... UOC:V53	1
7	PAHZZ	62983	223388	...SPRING,HELICAL,COMP............... UOC:V53	1
8	KFHZZ	96906	MS28775-111	...PACKING,PREFORMED PART OF KIT P/N 922906 PART OF KIT P/N 19894...... UOC:V53	1
9	KFHZZ	62983	271722	...RETAINER,PACKING PART OF KIT P/N 19894............................... UOC:V53	1
10	PAHZZ	62983	222640	...POWER STEERING PLUG............... UOC:V53	1
11	XDHZZ	62983	223898	...CAP............................... UOC:V53	1
12	PAHZZ	62983	235415	...PISTON FLOAT DETENT............... UOC:V53	1
13	PAHZZ	62983	235145	...SPRING,HYDRAULIC VA............... UOC:V53	1
14	PAHZZ	62983	235416	...PLUG.............................. UOC:V53	1
15	XDHZZ	62983	223897	...SPOOL EXTENSION................... UOC:V53	1
16	KFHZZ	62983	307198	..SHIM PART OF KIT P/N 922906 PART OF KIT P/N 19894.................. UOC:V53	4
17	KFHZZ	62983	237736	..RETAINER,OIL SEAL PART OF KIT P/N 922906 PART OF KIT P/N 19894...... UOC:V53	1
18	KFHZZ	62983	223489	..SEAL,CONTROL VALVE PART OF KIT P/N 922906 PART OF KIT P/N 19894...... UOC:V53	1
19	KFHZZ	62983	223493	..GASKET PART OF KIT P/N 922906 PART OF KIT P/N 19894.............. UOC:V53	1
20	KFHZZ	62983	226161	..PACKING,CONTROL VAL PART OF KIT P/N 922906 PART OF KIT P/N 19894..... UOC:V53	1

(1) ITEM NO	(2) SMR CODE	(3) CAGEC	(4) PART NUMBER	(5) DESCRIPTION AND USABLE ON CODES(UOC)	(6) QTY
21	KFHZZ	62983	283856	.RING,QUADRANT........................ UOC:V53	2
22	KFHZZ	62983	286669	.PACKING,PREFORMED................. UOC:V53	2
23	XDHHH	62983	283782	..VALVE ASSY........................ UOC:V53	1
24	XDHZZ	62983	307951	...ELBOW, 90 DEG,37 DE............. UOC:V53	1
25	PAHZZ	62983	282027	...SCREW,MACHINE................... UOC:V53	2
26	PAHZZ	62983	284154	...RETAINER......................... UOC:V53	1
27	PAHZZ	62983	284155	...SLEEVE........................... UOC:V53	1
28	KFHZZ	62983	187000	...PACKING,PREFORMED PART OF KIT P/N 922906 PART OF KIT P/N 19894...... UOC:V53	1
29	KFHZZ	62983	680702	...RING,QUADRANT PART OF KIT P/N 922906 PART OF KIT P/N 19894........ UOC:V53	1
30	PAHZZ	62983	246632	...SPRING,VALVE..................... UOC:V53	1
31	PAHZZ	62983	284156	...WASHER,SLOTTED................... UOC:V53	2
32	KFHHH	62983	283781	..VALVE ASSY........................ UOC:V53	1
33	PAHZZ	62983	254969	...PLUG, MACHINE THREA..............	1
34	KFHZZ	96906	MS28775-111	...PACKING,PREFORMED PART OF KIT P/N 19894........................... UOC:V53	1
35	KFHZZ	62983	271722	...RETAINER,PACKING PART OF KIT P/N 19894............................ UOC:V53	1
36	PAHZZ	62983	154012	...PACKING,PREFORMED............... UOC:V53	1
37	PAHZZ	62983	186580	...PLUG,MACHINE THREAD.............. UOC:V53	1
38	KFHZZ	62983	154129	...PACKING,PREFORMED PART OF KIT P/N 19894........................... UOC:V53	1
38	PAHZZ	62983	154129	...PACKING,PREFORMED............... UOC:V53	
39	PAHZZ	62983	259871	...SPRING,HELICAL,COMP............. UOC:V53	1
40	PAHZZ	62983	233019	...VALVE,VENT....................... UOC:V53	1

END OF FIGURE

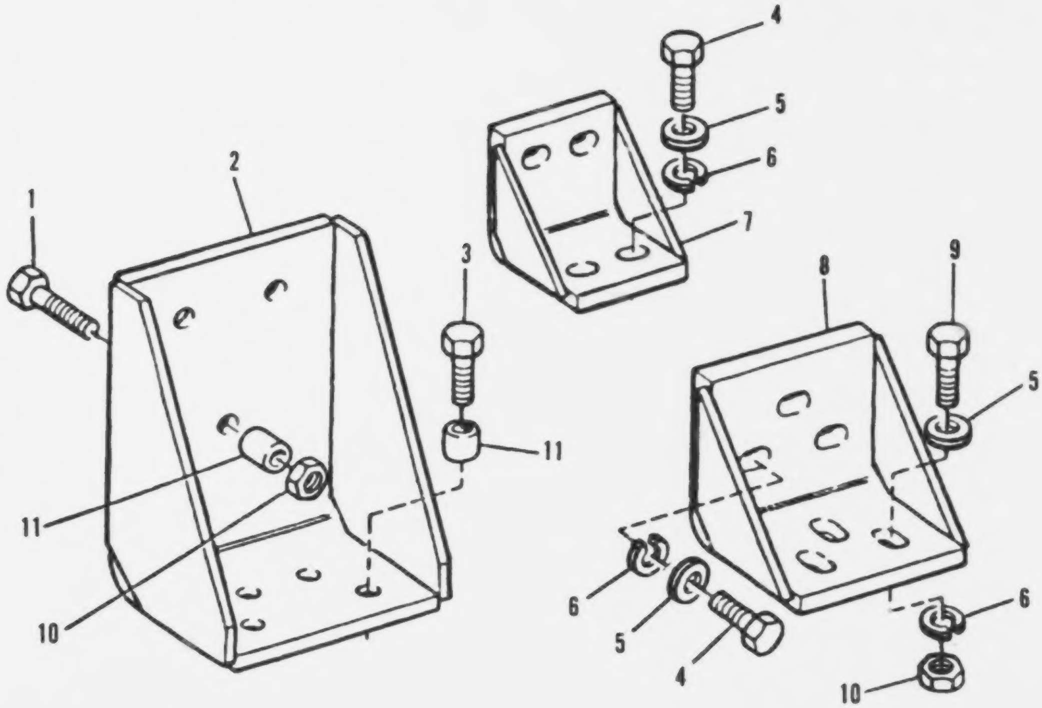

FIGURE 220. HYDRAULIC TANK MOUNTING

(1) ITEM NO	(2) SMR CODE	(3) CAGEC	(4) PART NUMBER	(5) DESCRIPTION AND USABLE ON CODES(UOC)	(6) QTY
				GROUP 4308: LIQUID TANK OR RESERVOIRS	
				FIG. 220 HYDRAULIC TANK MOUNTING	
1	PAFZZ	11083	1A8537	BOLT,MACHINE.......................... UOC:V53	3
2	XDFZZ	11083	1V2951	BRACKET ASSY.......................... UOC:V53	1
3	PAFZZ	11083	8S9C92	BOLT,MACHINE.......................... UOC:V53	4
4	PAFZZ	11083	S1566	BOLT,MACHINE.......................... UOC:V53	7
5	PAFZZ	11083	4D3704	WASHER,FLAT........................... UOC:V53	10
6	PAFZZ	11083	5S581	WASHER,LOCK........................... UOC:V53	10
7	XDFZZ	11083	2V6782	BRACKET ASSY.......................... UOC:V53	1
8	XDFZZ	11083	1V2708	BRACKET ASSY.......................... UOC:V53	1
9	PAFZZ	96906	MS90728-164	SCREW,CAP,HEXAGON H................... UOC:V53	6
10	PAFZZ	27315	2045V0C7	NUT,PLAIN,HEXAGON..................... UOC:V53	3
11	PAFZZ	11083	6K9800	SPACER,SLEEVE......................... UOC:V53	7

END OF FIGURE

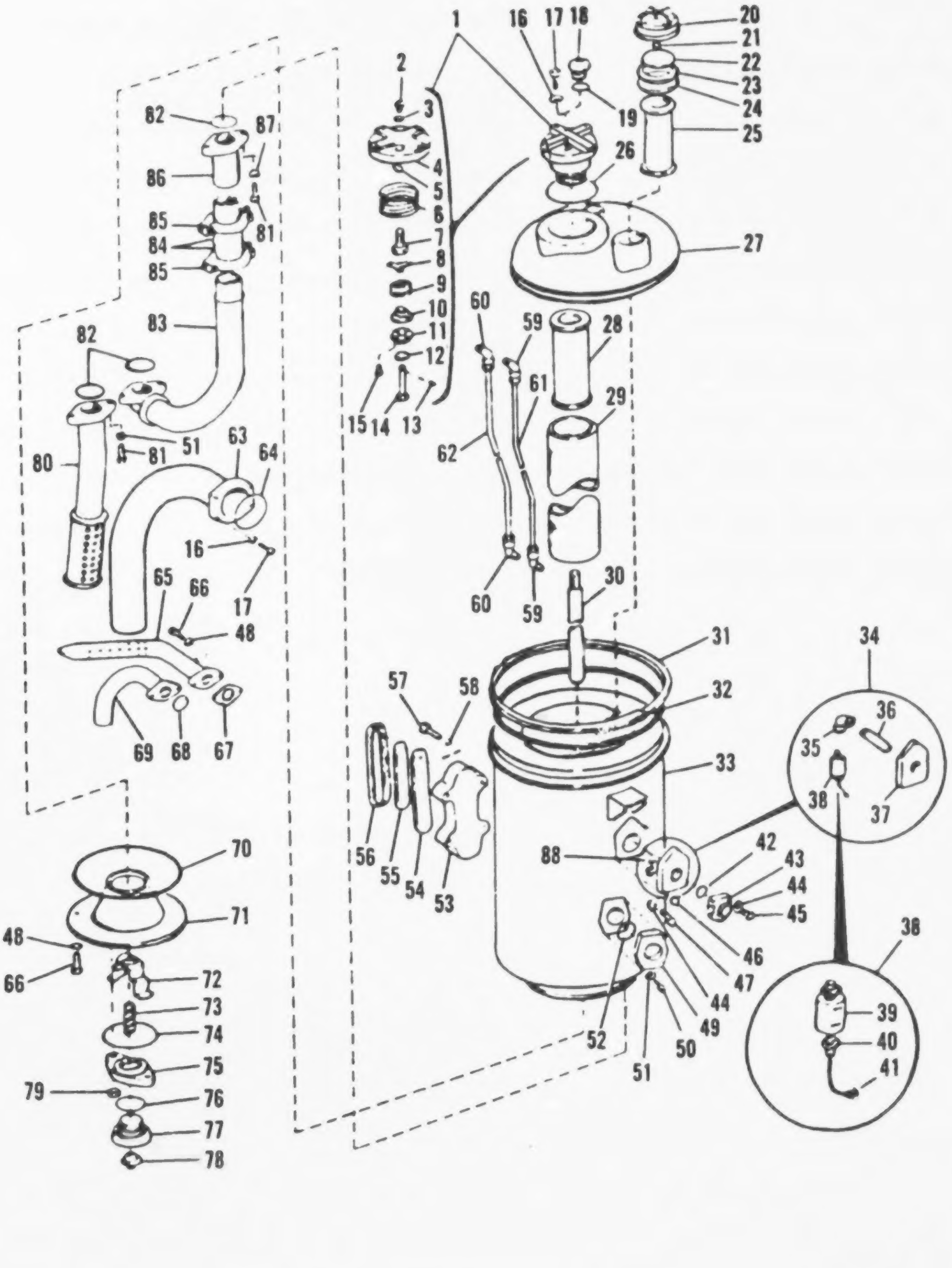

FIGURE 221. HYDRAULIC TANK ASSEMBLY

(1) ITEM NO	(2) SMR CODE	(3) CAGEC	(4) PART NUMBER	(5) DESCRIPTION AND USABLE ON CODES(UOC)	(6) QTY
				GROUP 4308: LIQUID TANK OR RESERVOIRS	
				FIG. 221 HYDRAULIC TANK ASSEMBLY	
1	PFFFF	11083	3G7232	BY-PASS GRP,FILTER.................. UOC:V53	1
2	PBFZZ	11083	2J2864	.PLUG,MACHINE THREAD................ UOC:V53	1
3	PAFZZ	11083	6F5559	.PACKING,PREFORMED................ UOC:V53	1
4	PFFZZ	11083	9J7195	.COVER,FLUID FILTER................ UOC:V53	1
5	PBFZZ	11083	4B9782	.BALL,BEARING...................... UOC:V53	1
6	PBFZZ	11083	7J2983	.SPRING........................... UOC:V53	1
7	PAFZZ	11083	340106	.SCREW,CAP,HEXAGON H............... UOC:V53	1
8	PBFZZ	11083	7J2994	.RETAINER,ARM..................... UOC:V53	2
9	PFFZZ	11083	3G3273	.SPRING,HELICAL,COMP............... UOC:V53	1
10	PFFZZ	11083	8J1856	.FILTER ELEMENT,FLUI............... UOC:V53	1
11	PBFZZ	11083	7J2999	.HOUSING.......................... UOC:V53	1
12	PBFZZ	11083	7J2987	.PLATE............................ UOC:V53	1
13	PBFZZ	11083	6H3956	.PIN,SPRING....................... UOC:V53	1
14	PBFZZ	11083	7J2988	.SHAFT............................ UOC:V53	1
15	PAFZZ	11083	7J2989	.SCREW............................ UOC:V53	3
16	PAFZZ	96906	MS16625-1200	RING,RETAINING..................... UOC:V53	8
17	PAFZZ	96906	MS90728-164	SCREW,CAP,HEXAGON H................ UOC:V53	8
18	PBFZZ	11083	9S8010	PLUG,MACHINE THREAD................ UOC:V53	1
19	PAFZZ	11083	2S4078	PACKING,PREFORMED.................. UOC:V53	1
20	PBOZZ	11083	4J3754	CAP,FILLER OPENING................. UOC:V53	1
21	PBOZZ	11083	4B9782	BALL,BEARING....................... UOC:V53	1
22	PBOZZ	11083	4J3816	COVER,ACCESS....................... UOC:V53	1
23	PAOZZ	11083	4J3815	GASKET............................. UOC:V53	1
24	PBOZZ	11083	7B2805	RING,RETAINING.....................	1

(1) ITEM NO	(2) SMR CODE	(3) CAGEC	(4) PART NUMBER	(5) DESCRIPTION AND USABLE ON CODES(UOC)	(6) QTY
				UOC:V53	
25	PBOZZ	11083	3D6678	STRAINER ELEMENT,SE................	1
				UOC:V53	
26	PAOZZ	11083	5P3092	PACKING,PREFORMED..................	1
				UOC:V53	
27	XDFZZ	11083	9J4716	HEAD ASSY..........................	1
				UOC:V53	
28	PAOZZ	11083	7J670	FILTER ELEMENT,FLUI................	2
				UOC:V53	
29	PFFZZ	11083	9J4066	STRAINER ELEMENT,SE................	1
				UOC:V53	
30	PFFZZ	11083	9J9316	ROD END,THREADED...................	1
				UOC:V53	
31	XDFZZ	98625	MV86144-T-C-2757	COUPLING,V,RTNR....................	1
				UOC:V53	
32	PAFZZ	11083	5P3228	PACKING PREFORMED..................	1
				UOC:V53	
33	XDFZZ	11083	9J4717	TANK ASSY..........................	1
				UOC:V53	
34	AFFFF	11083	2V9095	SWITCH ASSY........................	1
				UOC:V53	
35	XDFZZ	11083	38747	.ELBOW,90 DEG PIPE.................	1
				UOC:V53	
36	PFFZZ	11083	3B7275	.NIPPLE,PIPE.......................	1
				UOC:V53	
37	PAFZZ	11083	1V2751	.FLANGE,SWITCH,TANK................	1
				UOC:V53	
38	PAFZZ	11083	4V6205	.SWITCH,STEPPING...................	1
				UOC:V53	
39	XDFZZ	71870	33520	..SWITCH,LIQUID LEVEL..............	1
				UOC:V53	
40	PBFZZ	11083	4M5317	..BUSHING,PIPE.....................	1
				UOC:V53	
41	XDFZZ	79550	12167	..TERMINAL,SOLDERLESS..............	1
				UOC:V53	
42	PAFZZ	11083	9H8890	GASKET.............................	1
				UOC:V53	
43	PAFZZ	11083	1V9373	COVER,ACCESS.......................	1
				UOC:V53	
44	PFFZZ	11083	4B4278	WASHER,FLAT........................	3
				UOC:V53	
45	PAFZZ	96906	MS18154-58	SCREW,CAP,HEXAGON H................	3
				UOC:V53	
46	PAFZZ	11083	7K6416	GROMMET,RUBBER.....................	1
				UOC:V53	
47	PAFZZ	11083	0S1594	BOLT,MACHINE.......................	3
				UOC:V53	
48	PAFZZ	96906	MS35338-45	WASHER,LOCK........................	15
				UOC:V53	
49	XDFZZ	11083	2V7343	COVER..............................	1
				UOC:V53	
50	PAFZZ	11083	S1587	BOLT,MACHINE.......................	4

(1) ITEM NO	(2) SMR CODE	(3) CAGEC	(4) PART NUMBER	(5) DESCRIPTION AND USABLE ON CODES(UOC)	(6) QTY
				UOC:V53	
51	PAFZZ	96906	MS35338-48	WASHER,LOCK......................... UOC:V53	8
52	PAFZZ	11083	1H9696	PACKING,PREFORMED................... UOC:V53	1
53	XDFZZ	11083	9J8243	RETAINER............................ UOC:V53	1
54	XDFZZ	11083	3G5985	PLATE............................... UOC:V53	1
55	PBFZZ	11083	6J1081	WINDOW,OBSERVATION.................. UOC:V53	1
56	PAFZZ	11083	6J1080	GROMMET............................. UOC:V53	1
57	PAFZZ	11083	0S1588	BOLT................................ UOC:V53	6
58	PAFZZ	11083	5H6005	PACKING,PREFORMED................... UOC:V53	4
59	PBFZZ	32537	4C82	ELBOW,PIPE TO TUBE.................. UOC:V53	2
60	PFFZZ	19207	10951182	ELBOW,PIPE TO TUBE.................. UOC:V53	2
61	XDFZZ	11083	5P0750	TUBE,BULL........................... UOC:V53	1
62	PAFZZ	84561	4-035-250	TUBING,NONMETALLIC.................. UOC:V53	1
63	XDFZZ	11083	9J4120	TUBE ASSY........................... UOC:V53	1
64	PAFZZ	11083	2H3935	PACKING,PREFORMED................... UOC:V53	1
65	XDFZZ	11083	9J4989	TUBE ASSY........................... UOC:V53	1
66	PAFZZ	11083	1A2029	BOLT,MACHINE........................ UOC:V53	10
67	PAFZZ	11083	6L5567	GASKET.............................. UOC:V53	1
68	PAFZZ	11083	3P651	PACKING,PREFORMED................... UOC:V53	1
69	XDFZZ	11083	9J4711	TUBE ASSY........................... UOC:V53	1
70	PAFZZ	11083	2D6533	SEAL................................ UOC:V53	1
71	XDFZZ	11083	9J4699	COVER ASSY.......................... UOC:V53	1
72	XDFZZ	11083	8J8781	GUIDE, VALVE........................ UOC:V53	1
73	PBFZZ	11083	7B3039	SPRING,HELICAL,COMP................. UOC:V53	1
74	PAFZZ	11083	8M4436	PACKING............................. UOC:V53	1
75	PAFZZ	11083	8J8782	FLANGE,PIPE......................... UOC:V53	1
76	PAOZZ	11083	5M2057	PACKING,PREFORMED...................	1

(1) ITEM NO	(2) SMR CODE	(3) CAGEC	(4) PART NUMBER	(5) DESCRIPTION AND USABLE ON CODES(UOC)	(6) QTY
				UOC:V53	
77	PAFZZ	11083	9J7C31	PLUG,PIPE...........................	1
				UOC:V53	
78	XBOZZ	11083	8J8783	SLIDE,DIRECTIONAL C..................	1
				UOC:V53	
79	PAFZZ	11083	4J8265	NUT,SPECIAL..........................	2
				UOC:V53	
80	XDFZZ	11083	9J4722	TUBE ASSY............................	1
				UOC:V53	
81	PAFZZ	96906	MS90728-113	SCREW,CAP,HEXAGON H..................	6
				UOC:V53	
82	PAFZZ	11083	2H6338	PACKING,PREFORMED....................	3
				UOC:V53	
83	XDFZZ	11083	9J4128	TUBE ASSY............................	1
				UOC:V53	
84	PAFZZ	11083	9S2084	PACKING,PREFORMED....................	2
				UOC:V53	
85	XDFFF	11083	7S4150	JOINT ASSY,TUBE......................	1
				UOC:V53	
86	XDFZZ	11083	8J5796	TUBE.................................	1
				UOC:V53	
87	PFFZZ	11083	2M849	WASHER,FLAT..........................	2
				UOC:V53	
88	PAFZZ	11083	1H8720	PACKING,PREFORMED....................	1
				UOC:V53	

END OF FIGURE

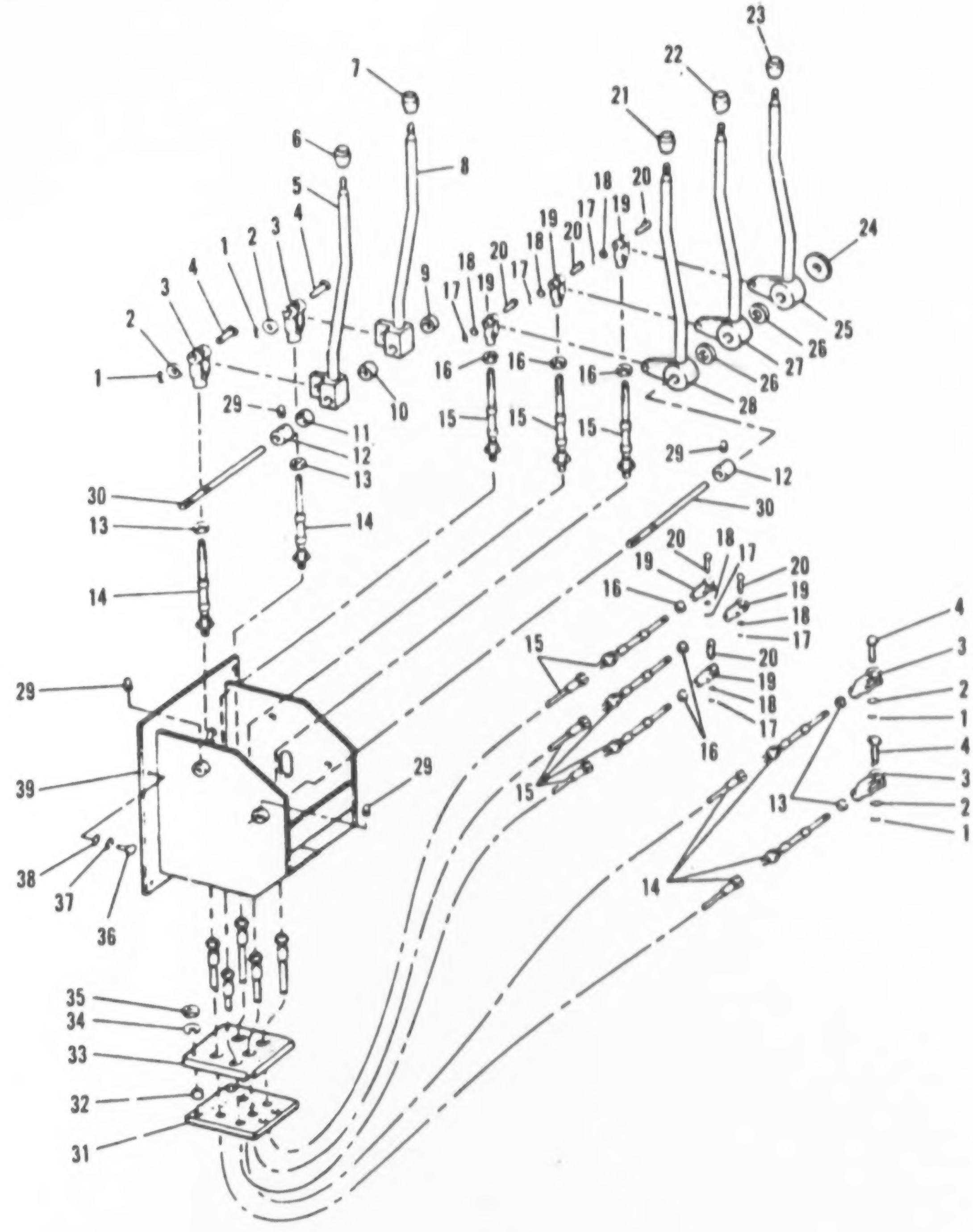

FIGURE 222. HYDRAULIC HAND CONTROLS ASSEMBLY

(1) ITEM NO	(2) SMR CODE	(3) CAGEC	(4) PART NUMBER	(5) DESCRIPTION AND USABLE ON CODES(UOC)	(6) QTY
				GROUP 4309: HYDRAULIC CONTROLS AND/ OR MANUAL CONTROLS	
				FIG. 222 HYDRAULIC HAND CONTROLS ASSEMBLY	
1	PAOZZ	96906	MS24665-353	PIN,COTTER........................ UOC:V53	4
2	PAOZZ	11083	4B4280	WASHER,FLAT........................ UOC:V53	4
3	XDOZZ	11083	6B3235	ROD END,CLEVIS..................... UOC:V53	4
4	PAOZZ	11083	3H1977	PIN,TRACTOR........................ UOC:V53	4
5	XDOZZ	11083	5R4388	LEVER ASSY......................... UOC:V53	1
6	XDOZZ	77313	344970	KNOB,TILT.......................... UOC:V53	1
7	XDOZZ	77313	344969	KNOB,LIFT.......................... UOC:V53	1
8	XDOZZ	11083	5R4389	LEVER ASSY......................... UOC:V53	1
9	PAOZZ	11083	9D4513	WASHER,LOCK........................ UOC:V53	1
10	XDOZZ	11083	1K4649	SPACER............................. UOC:V53	1
11	XDOZZ	11083	1B8074	WASHER............................. UOC:V53	1
12	XDOZZ	11083	1V8223	SPACER............................. UOC:V53	2
13	PAOZZ	11083	1A8285	NUT,PLAIN,HEXAGON.................. UOC:V53	4
14	PBOZZ	06970	173-MTT-2-56	CONTROL ASSEMBLY,PU................ UOC:V53	2
15	PAOZZ	06970	173L-TT1-54	CONTROL ASSEMBLY,PU................ UOC:V53	3
16	PAOZZ	72915	120613	NUT,PLAIN,HEXAGON.................. UOC:V53	6
17	PAOZZ	24617	137946	PIN,COTTER......................... UOC:V53	6
18	PAOZZ	11083	5M1822	WASHER............................. UOC:V53	6
19	PAOZZ	11083	5P6438	CLEVIS,ROD END..................... UOC:V53	6
20	PAOZZ	11083	3K5601	PIN................................ UOC:V53	6
21	XDOZZ	77313	377388	KNOB,BLANK......................... UOC:V53	1
22	XDOZZ	77313	344971	KNOB,ROTR.......................... UOC:V53	1
23	XDOZZ	77313	344972	KNOB,SIDE SHFR..................... UOC:V53	1

(1) ITEM NO	(2) SMR CODE	(3) CAGEC	(4) PART NUMBER	(5) DESCRIPTION AND USABLE ON CODES(UOC)	(6) QTY
24	PAOZZ	11083	8M5346	WASHER,FLAT UOC:V53	1
25	XDOZZ	11083	5R4401	LEVER ASSY UOC:V53	1
26	PFOZZ	11083	T-251	WASHER,FLAT UOC:V53	2
27	XDOZZ	11083	5R4357	LEVER ASSY UOC:V53	1
28	XDOZZ	11083	5R4400	LEVER ASSY UOC:V53	1
29	PAOZZ	11083	2H3903	SETSCREW UOC:V53	4
30	XDOZZ	11083	5R4405	SHAFT UOC:V53	2
31	PAOZZ	11083	5R4372	SEAL,RUBBER,SPECIAL UOC:V53	1
32	PAOZZ	11083	1B7904	SPACER UOC:V53	2
33	XDOZZ	11083	5R4368	RETAINER UOC:V53	1
34	PAOZZ	11083	1H3338	LOCKWASHER UOC:V53	4
35	PAOZZ	24617	426376	NUT,PLAIN,HEXAGON UOC:V53	4
36	PAOZZ	11083	0L1351	BOLT,MACHINE UOC:V53	4
37	PAOZZ	96906	MS35338-45	WASHER,LOCK UOC:V53	4
38	PFOZZ	11083	4B4278	WASHER,FLAT UOC:V53	4
39	XDOZZ	11083	5R4377	BRACKET ASSY UOC:V53	1

END OF FIGURE

(1) ITEM NO	(2) SMR CODE	(3) CAGEC	(4) PART NUMBER	(5) DESCRIPTION AND USABLE ON CODES(UOC)	(6) QTY
				GROUP 94: REPAIR KIT	
				GROUP 9401: REPAIR KITS	
				FIG. KIT	
	PAHZZ	11671	13887	PARTS KIT,HYDRAULIC................ UOC:V53	1
				PACKING,PREFMD (2) 148-19	
				PACKING,PREFMD (2) 148-31	
				PACKING,PREFMD (2) 148-16	
				PACKING,PREFMD (1) 148-37	
				RING,RETAINING (2) 148-17	
				RING,RETAINING (2) 148-29	
				RING,SPACER (1) 148-3	
				SEAL (2) 148-2	
	PAHZZ	11671	14663-1	SEAL KIT......................... UOC:V53	1
				PACKING,PREFMD (1) 149-3	
				PACKING,PREFMD (4) 149-12	
				RING,BACKUP (4) 149-6	
				SEPARATOR,END (4) 149-5	
				SEPARATOR,CENTER (2) 149-4	
				STRIP,SEALING (4) 149-8	
	PAHZZ	23382	19894	RING SET......................... UOC:V53	1
				GASKET (1) 219-19	
				PACKING,PREFORMED (1) 219-8	
				PACKING,CONTROL VAL (1) 219-20	
				PACKING,PREFORMED (1) 219-28	
				PACKING,PREFORMED (1) 219-34	
				PACKING,PREFORMED (1) 219-38	
				RETAINER,PACKING (1) 219-9	
				RETAINER,OIL SEAL (1) 219-17	
				RETAINER,PACKING (1) 219-35	
				RING,QUADRANT (1) 219-29	
				SEAL,CONTROL VALVE (1) 219-18	
				SHIM (4) 219-16	
	XDFZZ	11671	25658	KIT,FRONT SECTION................. UOC:V53	1
				BALL (2) 148-10	
				BODY (1) 148-27	
				COUPLING,SPLINE (1) 148-23	
				FLANGE (1) 148-11	
				GEAR,DRIVE,FRONT (1) 148-24	
				GEAR,IDLER,FRONT (1) 148-33	
				PACKING,PREFMD (2) 148-19	
				PACKING,PREFMD (2) 148-16	
				PACKING,PREFMD (1) 148-37	
				PIN,STR,HDLS (6) 148-15	
				PLATE,ISOLATION,TOP(1) 148-25	
				PLATE,ISOLATION,BOT(1) 148-36	

best copy available

Reproduced from poor document.

(1) ITEM NO	(2) SMR CODE	(3) CAGEC	(4) PART NUMBER	(5) DESCRIPTION AND USABLE ON CODES(UOC)	(6) QTY
				PLATE,PRESSURE (2) 148-20	
				PLUG (1) 148-26	
				RING,BACK UP (2) 148-18	
				RING,RETAINING (1) 148-22	
				RING,RETAINING (2) 148-17	
				RING,SPACER (1) 148-3	
				VALVE,SAFETY RELIEF(1) 148-14	
	PFHZZ	11671	26058-C	KIT,REAR SECTION....................	1
				UOC:V53	
				BODY (1) 148-38	
				COUPLING,SPLINE (1) 148-23	
				GEAR,SPUR (1) 148-34	
				PIN,STR,HDLS (6) 148-15	
				PLATE,BEARING (1) 148-42	
				PLATE,ISOLATION,TOP(1) 148-35	
				PLATE,ISOLATION,BOT(1) 148-44	
				PLATE,PRESSURE (2) 148-32	
				RING,BACK UP (2) 148-30	
				RING,RETAINING (2) 148-29	
				SCREW,CAP,HEX HD (8) 148-40	
				WASHER,FLAT (8) 148-41	
	PAHZZ	11083	5P8057	GASKET KIT..........................	1
				UOC:V53	
				GASKET (8) 3-6	
				SEAL (24) 3-8	
	PAFZZ	11083	5P9843	GASKET AND SEAL SET................	1
				UOC:V53	
				GASKET (1) 4-9	
				GASKET (2) 5-26	
				GASKET (8) 24-3	
				GASKET (1) 41-4	
				GASKET (2) 59-5	
				GASKET (2) 59-25	
				PACKING,PREFORMED (1) 22-13	
				PACKING,PREFORMED (1) 17-18	
				PACKING,PREFORMED (2) 16-12	
				PACKING,PREFORMED (1) 28-28	
				PACKING,PREFORMED (8) 28-29	
				PACKING,PREFORMED (1) 59-16	
				SEAL (2) 3-31	
				SEAL,PACKING (2) 10-1	
				SEAL,PLAIN ENCASED (1) 59-8	
				SEAL,RING (2) 17-13	
	PAFZZ	11083	5P9972	GASKET AND SEAL SET................	1
				UOC:V53	
				GASKET (2) 41-2	
				SEAL,RING (1) 41-16	
	PBFHH	11083	5R4536	ENGINE,DIESEL......................	1
				UOC:V53	
	PAHZZ	11083	5R4553	GASKET AND SEAL SET................	1
				UOC:V53	
				GASKET (8) 3-6	

(1) ITEM NO	(2) SMR CODE	(3) CAGEC	(4) PART NUMBER	(5) DESCRIPTION AND USABLE ON CODES(UOC)	(6) QTY
				GASKET (1) 4-4	
				GASKET (1) 4-13	
				GASKET (1) 4-9	
				GASKET (1) 4-7	
				GASKET (1) 4-6	
				GASKET (2) 5-26	
				GASKET (1) 7-21	
				GASKET (2) 7-17	
				GASKET (1) 14-3	
				GASKET (1) 14-20	
				GASKET (1) 14-5	
				GASKET (1) 14-12	
				GASKET (1) 14-9	
				GASKET (1) 22-9	
				GASKET (2) 19-8	
				GASKET (1) 21-3	
				GASKET (1) 17-4	
				GASKET (1) 16-6	
				GASKET (8) 24-3	
				GASKET (1) 34-9	
				GASKET (1) 47-37	
				GASKET (2) 47-33	
				GASKET (1) 47-39	
				GASKET (1) 47-50	
				GASKET (1) 47-14	
				GASKET (1) 29-26	
				GASKET (1) 33-3	
				GASKET (1) 32-1	
				GASKET (1) 32-4	
				GASKET (1) 41-4	
				GASKET (2) 41-2	
				GASKET (1) 38-1	
				GASKET (1) 50-27	
				GASKET (1) 50-12	
				GASKET (1) 50-7	
				GASKET (1) 51-12	
				GASKET (1) 58-4	
				GASKET (2) 59-5	
				GASKET (4) 59-13	
				GASKET (2) 59-25	
				GASKET (1) 59-4	
				GASKET (2) 59-32	
				GASKET (1) 59-38	
				GASKET (1) 64-16	
				GASKET (1) 71-2	
				GASKET (2) 112-7	
				GASKET,PLATE (2) 3-1	
				LOCK PLATE,OIL TUBE(1) 47-21	
				LOCKING PLATE,NUT A(1) 49-3	
				PACKING WITH RETAIN(32) 5-22	
				PACKING,PREFORMED (4) 3-26	
				PACKING,PREFORMED (1) 22-13	

(1) ITEM NO	(2) SMR CODE	(3) CAGEC	(4) PART NUMBER	(5) DESCRIPTION AND USABLE ON CODES(UOC)	(6) QTY
				PACKING,PREFORMED (2) 20-3	
				PACKING,PREFORMED (4) 19-22	
				PACKING,PREFORMED (3) 17-7	
				PACKING,PREFORMED (1) 17-8	
				PACKING,PREFORMED (1) 17-18	
				PACKING,PREFORMED (1) 23-9	
				PACKING,PREFORMED (2) 16-12	
				PACKING,PREFORMED (1) 16-10	
				PACKING,PREFORMED (1) 25-31	
				PACKING,PREFORMED (1) 27-8	
				PACKING,PREFORMED (2) 28-22	
				PACKING,PREFORMED (1) 28-28	
				PACKING,PREFORMED (8) 28-29	
				PACKING,PREFORMED (4) 34-2	
				PACKING,PREFORMED (1) 34-11	
				PACKING,PREFORMED (2) 47-52	
				PACKING,PREFORMED (1) 47-22	
				PACKING,PREFORMED (1) 48-18	
				PACKING,PREFORMED (2) 48-14	
				PACKING,PREFORMED (1) 48-35	
				PACKING,PREFORMED (1) 29-22	
				PACKING,PREFORMED (2) 29-11	
				PACKING,PREFORMED (8) 29-15	
				PACKING,PREFORMED (1) 29-32	
				PACKING,PREFORMED (1) 29-31	
				PACKING,PREFORMED (1) 33-25	
				PACKING,PREFORMED (1) 33-10	
				PACKING,PREFORMED (1) 41-14	
				PACKING,PREFORMED (4) 38-4	
				PACKING,PREFORMED (1) 50-30	
				PACKING,PREFORMED (1) 50-15	
				PACKING,PREFORMED (1) 59-23	
				PACKING,PREFORMED (1) 59-16	
				PACKING,PREFORMED (1) 60-24	
				PACKING,PREFORMED (1) 60-28	
				PACKING,PREFORMED (1) 60-30	
				PACKING,PREFORMED (1) 61-15	
				PACKING,PREFORMED (1) 72-2	
				PACKING,PREFORMED (4) 39-27	
				PACKING,PREFORMED (1) 43-6	
				PACKING,PREFORMED (1) 73-19	
				PLUG,MACHINE THREAD (1) 47-10	
				RETAINER,PACKING (1) 59-29	
				RING (1) 59-2	
				RING (1) 60-23	
				RING,THRUST (1) 40-16	
				SEAL (2) 3-31	
				SEAL (1) 17-23	
				SEAL (1) 60-3	
				SEAL,ADAPTER,MOTOR (1) 16-8	
				SEAL,ENGINE (8) 5-10	
				SEAL,PACKING (2) 10-1	

(1) ITEM NO	(2) SMR CODE	(3) CAGEC	(4) PART NUMBER	(5) DESCRIPTION AND USABLE ON CODES(UOC)	(6) QTY
				SEAL,PACKING (8) 28-37	
				SEAL,PACKING (2) 46-2	
				SEAL,PLAIN (2) 25-2	
				SEAL,PLAIN (1) 28-18	
				SEAL,PLAIN (2) 47-3	
				SEAL,PLAIN ENCASED (1) 33-15	
				SEAL,PLAIN ENCASED (1) 33-16	
				SEAL,PLAIN ENCASED (1) 59-8	
				SEAL,PLAIN ENCASED (1) 61-20	
				SEAL,PLAIN ENCASED (1) 64-20	
				SEAL,RING (2) 17-13	
				SEAL,RING (1) 41-16	
				SEAL,SPECIAL (1) 32-8	
				TUBE ASSY (1) 25-41	
				WASHER,FLAT (1) 51-3	
				WASHER,KEY (1) 25-4	
	PAFZZ	11083	6V220	GASKET KIT,CENTRAL..................	1
				UOC:V53	
				GASKET (1) 4-4	
				GASKET (1) 4-13	
				GASKET (1) 4-9	
				GASKET (1) 4-7	
				GASKET (1) 4-6	
				GASKET (1) 14-12	
				GASKET (2) 19-8	
				PACKING,PREFORMED (4) 3-26	
				PACKING,PREFORMED (4) 19-22	
				PACKING,PREFORMED (2) 16-12	
	PAFZZ	11083	6V230	GASKET AND SEAL SET..................	1
				UOC:V53	
				PACKING,PREFORMED (2) 20-3	
	PAFZZ	11083	6V236	GASKET AND SEAL SET..................	1
				UOC:V53	
				GASKET (2) 19-8	
				GASKET (1) 21-3	
				GASKET (1) 17-4	
				GASKET (1) 58-4	
				GASKET (4) 59-13	
				GASKET (1) 59-4	
				GASKET (1) 59-38	
				GASKET (2) 112-7	
				PACKING,PREFORMED (2) 20-3	
				PACKING,PREFORMED (4) 19-22	
				PACKING,PREFORMED (3) 17-7	
				PACKING,PREFORMED (1) 17-8	
				PACKING,PREFORMED (1) 16-10	
				RETAINER,PACKING (1) 59-29	
				RING (1) 59-2	
				SEAL,RING (1) 41-16	
	PAFZZ	11083	6V241	GASKET AND SEAL SET..................	1
				UOC:V53	
				GASKET (1) 32-4	

(1) ITEM NO	(2) SMR CODE	(3) CAGEC	(4) PART NUMBER	(5) DESCRIPTION AND USABLE ON CODES(UOC)	(6) QTY
				PACKING,PREFORMED (1) 47-22	
	PAFZZ	11083	6V2978	GASKET KIT,REAR.................... UOC:V53	1
				GASKET (1) 41-15	
				PACKING,PREFORMED (1) 25-31	
				SEAL,PLAIN (2) 25-2	
				TUBE ASSY (1) 25-41	
				WASHER,KEY (1) 25-4	
	PAFZZ	11083	9N6289	PARTS KIT,ENGINE WA................. UOC:V53	1
				BEARING,BALL,ANNULA(1) 60-7	
				RETAINER (1) 60-11	

END OF FIGURE

(1) ITEM NO	(2) SMR CODE	(3) CAGEC	(4) PART NUMBER	(5) DESCRIPTION AND USABLE ON CODES(UOC)	(6) QTY
				GROUP 95: GENERAL USE STANDARDIZED PARTS	
				GROUP 9501: BULK MATERIEL	
				FIG. BULK	
1	PFOZZ	11083	5P182	HOSE,BULK............................	V
2	PFOZZ	11083	5P181	HOSE, BULK...........................	V
3	PFOZZ	11083	5V8999	HOSE, BULK...........................	V
4	PFOZZ	11083	5P178	HOSE, BULK...........................	V
5	PFOZZ	11083	9S247	HOSE, BULK...........................	V
6	PFOZZ	11083	8S8220	HOSE, BULK...........................	V
7	PFOZZ	11083	5P6624	HOSE, BULK...........................	V
8	PFOZZ	11083	5P180	HOSE, BULK...........................	V
9	PFOZZ	11083	8S9355	HOSE, BULK...........................	V
10	PFOZZ	11083	5P179	HOSE, BULK...........................	V
11	PFOZZ	11083	5P740	HOSE, BULK...........................	V
12	PFOZZ	11083	5P0878	SEAL, BULK...........................	V
13	PFOZZ	11083	5P1836	TUBE, BULK...........................	V
14	PFOZZ	11083	5P5623	WIRE, BULK...........................	V
15	PFOZZ	11083	6A3770	WIRE, BULK...........................	V
16	PFOZZ	11083	5P643	WIRE, BULK...........................	V
17	PFOZZ	11083	5P4515	WIRE, BULK...........................	V
18	PFOZZ	11083	5P4517	WIRE, BULK...........................	V
19	PFOZZ	11083	5P674	WIRE, BULK...........................	V
20	PFOZZ	11083	5P641	WIRE, BULK...........................	V
21	PFOZZ	11083	5P396	WIRE, BULK...........................	V
22	PFOZZ	11083	5P648	WIRE, BULK...........................	V
23	PFOZZ	11083	5P680	WIRE, BULK...........................	V

END OF FIGURE

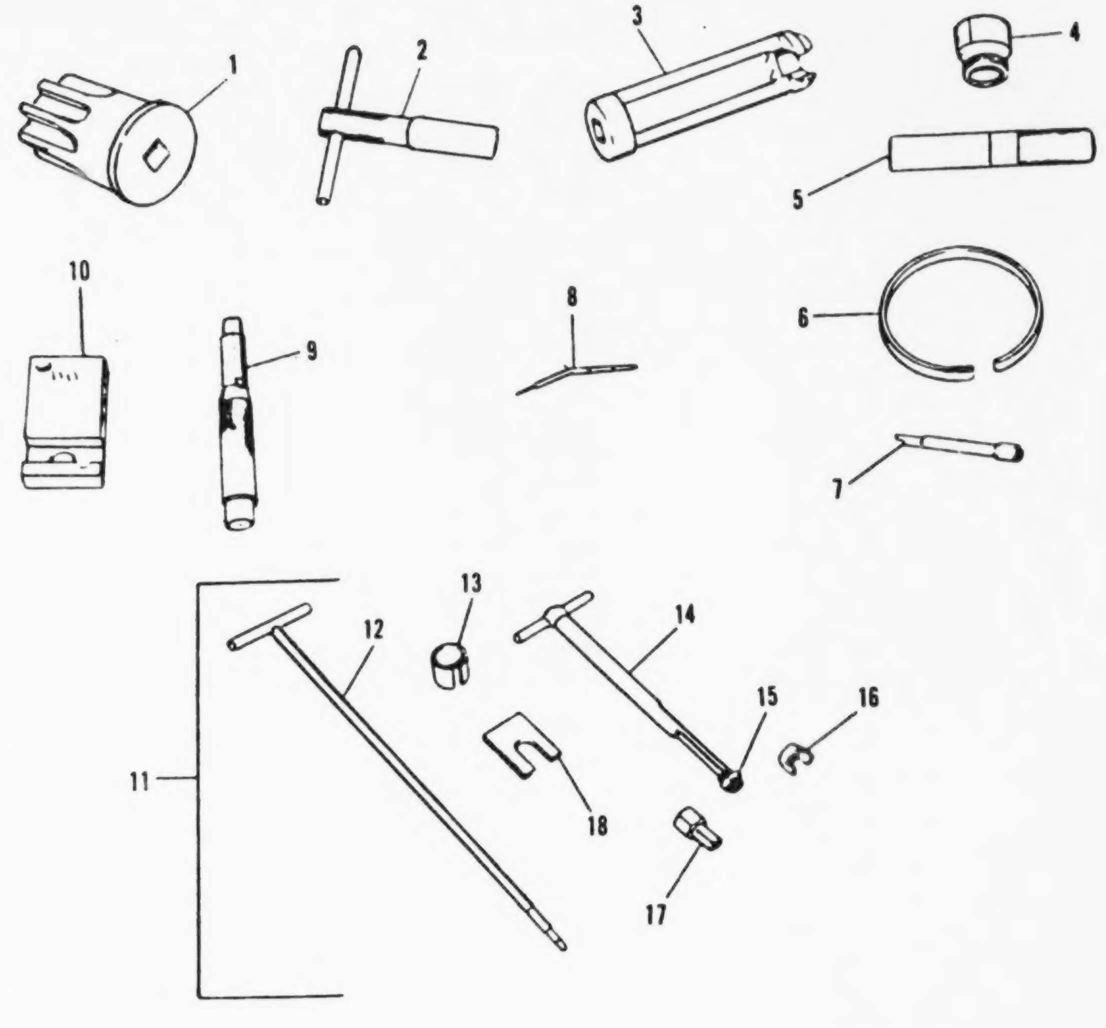

FIGURE 223. SPECIAL TOOLS

(1) ITEM NO	(2) SMR CODE	(3) CAGEC	(4) PART NUMBER	(5) DESCRIPTION AND USABLE ON CODES(UOC)	(6) QTY
				GROUP 26: SPECIAL TOOLS	
				GROUP 2604: SPECIAL TOOLS	
				FIG. 223 SPECIAL TOOLS	
1	XDFZZ	11083	9S9082	TURNING PINION.......................... UOC:V53 BOI:1 PER 1-10 END ITEMS	
2	XDFZZ	11083	5P6229	EXTRACTOR............................... UOC:V53 BOI:1 PER 1-10 END ITEMS	
3	XDOZZ	11083	5P0144	SOCKET.................................. UOC:V53 BOI:1 PER 1-10 END ITEMS	
4	PFFZZ	58312	8S4613-00	WRENCH BONNET NUT..................... UOC:V53 BOI:1 PER 1-10 END ITEMS	
5	PAFZZ	58312	8S2244-00	EXTRACTOR,FUEL INJE................... UOC:V53 BOI:1 PER 1-10 END ITEMS	
6	XDHZZ	11083	5P7314	RING.................................... UOC:V53 BOI:1 PER 1-10 END ITEMS	
7	XDFZZ	11083	5P7312	DISTORTER............................... UOC:V53 BOI:1 PER 1-10 END ITEMS	
8	XDFZZ	11083	5P9697	TIMING PIN.............................. UOC:V53 BOI:1 PER 1-10 END ITEMS	
9	XDHZZ	11083	5P6218	DRIVER.................................. UOC:V53 BOI:1 PER 1-10 END ITEMS	
10	XDHZZ	11083	5P6217	FIXTURE................................. UOC:V53 BOI:1 PER 1-10 END ITEMS	
11	XDFZZ	11083	5P7433	VALVE LIFTER TOOL G................... UOC:V53 BOI:1 PER 1-10 END ITEMS	
12	XDFZZ	11083	5P6599	.HANDLE ASSY........................... UOC:V53 BOI:1 PER 1-10 END ITEMS	
13	XDFZZ	11083	5P2405	.COMPRESSOR............................ UOC:V53 BOI:1 PER 1-10 END ITEMS	
14	XDFZZ	11083	5P2408	.HANDLE ASSY........................... UOC:V53 BOI:1 PER 1-10 END ITEMS	
15	XDFZZ	11083	5P2685	.NUT.................................... UOC:V53 BOI:1 PER 1-10 END ITEMS	
16	XDFZZ	11083	5P2400	.COMPRESSOR............................	

(1) ITEM NO	(2) SMR CODE	(3) CAGEC	(4) PART NUMBER	(5) DESCRIPTION AND USABLE ON CODES(UOC)	(6) QTY
				UOC:V53 BCI:1 REF 1-10 END ITEMS	
17	XDFZZ	11083	5P6601	.COLLET................................ UOC:V53 BCI:1 REF 1-10 END ITEMS	
18	XDFZZ	11083	5P2395	.HOLDER................................ UOC:V53 BCI:1 REF 1-10 END ITEMS	

END OF FIGURE

CROSS-REFERENCE INDEXES

NATIONAL STOCK NUMBER INDEX

STOCK NUMBER	FIG.	ITEM
5970-00-001-9382	69	28
5365-00-003-6918	16	3
5310-00-005-0699	145	24
5305-00-005-0896	75	18
	83	6
	84	10
	87	4
	87	10
	87	16
	87	22
	189	18
5310-00-007-9861	42	26
	159	2
	169	17
	220	10
5306-00-008-5943	126	28
5330-00-008-5957	154	19
5305-00-008-5971	2	27
	56	23
	132	54
5310-00-009-7704	124	11
5310-00-010-3092	69	13
	75	14
	92	49
	92	52
4730-00-010-3874	5	19
	44	37
4730-00-010-9365	199	40
5310-00-011-0634	174	7
4730-00-011-0667	42	11
4730-00-011-2578	38	6
4730-00-011-8537	185	8
	185	10
	185	20
	185	22
	185	24
3110-00-011-9935	156	4
	157	31
	158	6
	221	5
	221	21
5920-00-012-0151	75	30
4730-00-013-7397	61	30
6240-00-019-3093	84	9
5307-00-026-3776	69	26
4820-00-026-8473	186	15
4720-00-028-9929	39	3
5325-00-031-3336	69	15
2910-00-033-2200	33	22
	51	6
5330-00-034-2335	133	12
5310-00-038-9417	90	36
	189	2
5310-00-042-6376	47	31
	92	65
	94	10
	110	31
	127	9
	162	1
	164	16
	167	53
	189	8
	191	8
	222	35
4730-00-042-8988	3	24
5310-00-044-3339	207	2
	208	61
	209	38
4730-00-044-4688	3	28
6240-00-044-6914	84	8
5310-00-045-1079	146	1
	207	10
	208	57
	209	37
5310-00-045-3299	84	3
	92	50
5310-00-045-5001	87	27
	107	26
	159	3
	201	36
5310-00-050-3520	161	14
4730-00-050-4203	161	12
4730-00-050-4208	119	4
	119	36
	147	7
	185	14
	199	8
	201	14
	207	22
	209	23
5307-00-053-9023	39	20
4730-00-057-5555	3	16
5305-00-058-1082	188	16
5310-00-062-2051	70	5
5306-00-063-5001	202	42
5307-00-067-4895	39	9
	55	9
5305-00-068-0506	44	16
5306-00-068-0513	29	2
	207	67

CROSS-REFERENCE INDEXES

NATIONAL STOCK NUMBER INDEX

STOCK NUMBER	FIG.	ITEM	STOCK NUMBER	FIG.	ITEM
5306-00-068-0513	208	5	5975-00-074-2072	197	26
	209	76	5365-00-074-3608	30	18
5305-00-068-7837	44	12	5330-00-074-3771	60	28
	46	11	5330-00-074-3773	38	4
	81	23	5310-00-079-6474	207	23
	90	33		209	24
	92	63	5315-00-080-1541	210	10
	132	13		211	10
	161	32		212	10
	162	5	4730-00-080-7040	205	20
	163	36	5330-00-081-3139	129	6
	164	1	5360-00-081-9031	47	27
	167	14	5330-00-081-9702	200	7
	189	3	5305-00-082-1749	222	29
	190	17	2940-00-084-7543	39	8
	190	20	2530-00-087-0327	219	10
	191	4	2530-00-087-0369	219	27
5310-00-070-6870	40	9	5310-00-087-6875	40	28
5305-00-071-2055	19	21	5310-00-088-4075	180	31
	65	1	4730-00-089-2515	32	16
	95	14		59	11
	117	3	5305-00-090-4147	69	34
	131	41	5305-00-090-4204	69	33
5305-00-071-2069	2	21	5305-00-090-4227	69	4
	68	11	5305-00-090-4274	69	12
	89	7	3110-00-100-0233	107	8
	97	22	3110-00-100-0305	107	7
	98	2	3110-00-100-0605	122	3
	107	12	3110-00-100-0612	122	7
	117	17	3110-00-100-2367	146	7
	119	23	2920-00-100-3403	70	48
	151	9	3110-00-100-3638	122	2
	155	16	3110-00-100-3651	122	8
	157	25	3110-00-100-6149	31	17
	162	20	2590-00-101-1685	221	20
	172	45	3110-00-101-1796	108	8
	178	3	2940-00-103-8872	42	19
	206	9	5330-00-104-6561	110	56
	221	81	5330-00-104-6565	47	37
5305-00-071-2076	112	10	5330-00-105-0356	50	12
	206	48	5330-00-105-0368	17	8
5305-00-071-2083	149	15	5310-00-109-7638	146	3
5305-00-071-2505	46	13		178	23
	49	2	2520-00-113-5509	100	6
	163	40	5940-00-113-8183	93	6
5305-00-071-2506	81	13	5940-00-113-9826	74	6
	207	13	5940-00-114-1306	93	2
5305-00-071-2508	210	5	5940-00-114-1311	93	5
	211	5	2815-00-114-3107	5	31
	212	5	2815-00-114-3943	16	2

CROSS-REFERENCE INDEXES

NATIONAL STOCK NUMBER INDEX

STOCK NUMBER	FIG.	ITEM
2590-00-114-4151	173	19
5305-00-115-5526	9	6
	32	15
	35	1
	42	42
	43	22
	45	9
	45	26
	54	6
	64	15
	73	3
	79	10
	83	12
	85	9
	88	16
	90	29
	91	8
	110	35
	116	1
	130	14
	130	86
	136	19
	137	25
	143	33
	151	57
	176	5
	186	26
	190	12
	191	21
	194	3
	221	45
2910-00-116-0407	49	4
5340-00-116-0412	49	3
2990-00-116-0423	47	7
5330-00-116-0429	71	2
5360-00-116-0432	48	7
2990-00-116-0440	48	19
5360-00-116-0448	51	11
5340-00-116-0497	47	38
2910-00-116-3227	51	13
2815-00-116-9445	5	30
2815-00-116-9446	5	30
2815-00-116-9557	5	31
5310-00-117-4788	4	2
	5	3
	7	19
	13	5
	14	7
	16	15
	16	19
5310-00-117-4788	17	2
	18	14
	18	19
	19	5
	21	2
	22	3
	23	5
	24	5
	25	16
	28	19
	32	14
	34	15
	35	2
	37	19
	38	20
	39	17
	41	11
	45	23
	53	4
	54	4
	56	17
	57	6
	59	39
	61	24
	62	6
	64	9
	65	7
	66	1
	67	13
	68	15
	73	4
	82	14
	90	9
	95	22
	98	47
	101	5
	106	2
	108	40
	114	5
	116	3
	122	36
	124	5
	130	2
	131	1
	143	10
	152	2
	167	33
	169	27
	172	67
	184	3

CROSS-REFERENCE INDEXES

NATIONAL STOCK NUMBER INDEX

STOCK NUMBER	FIG.	ITEM
5310-00-117-4788	196	20
	199	28
	202	22
	204	4
	217	7
	0008	8
5306-00-118-0108	38	11
3120-00-118-3007	48	9
5310-00-118-3035	82	10
5306-00-118-3052	47	47
5306-00-118-3054	100	18
	106	53
5305-00-118-6470	218	23
5920-00-118-8195	75	29
	77	23
5940-00-118-8836	74	8
3040-00-119-0612	110	23
5340-00-119-2065	181	13
4730-00-122-3969	5	20
	17	15
5330-00-122-4090	116	20
5330-00-122-9656	17	7
	196	7
5330-00-123-2727	118	2
2540-00-123-7226	181	5
3040-00-124-0880	144	14
2940-00-125-9544	21	10
5315-00-129-6499	144	11
2920-00-130-3783	169	8
5930-00-132-8283	77	25
4730-00-133-3196	203	33
5975-00-133-8687	43	26
	78	13
2910-00-137-2004	49	9
5306-00-137-3475	47	41
5306-00-138-4466	217	2
5315-00-139-0178	48	5
5310-00-139-7030	2	5
	2	35
	6	11
	7	10
	7	23
	42	7
	68	2
	110	38
	123	7
	124	25
	148	4
	169	20
	195	21

STOCK NUMBER	FIG.	ITEM
5310-00-139-7030	220	5
5330-00-141-5069	206	69
	221	64
4730-00-143-3941	117	13
	125	11
	131	21
	142	5
	146	10
5940-00-143-4774	83	14
	88	9
	93	7
	93	25
	191	7
5940-00-143-4775	93	8
	191	6
5940-00-143-4780	71	12
	93	4
	172	5
	172	12
	172	32
5940-00-143-4793	74	14
	80	2
	82	19
	92	21
5940-00-143-4794	77	13
5310-00-143-6382	109	6
6240-00-143-7513	81	7
5330-00-143-8713	42	15
3110-00-144-8518	64	13
3110-00-144-8519	69	46
3110-00-144-8542	60	5
3110-00-144-8577	126	24
3110-00-144-8589	179	34
3110-00-144-9455	25	24
3110-00-144-9793	25	23
5305-00-151-9899	40	26
6240-00-155-7866	77	6
6240-00-155-8707	75	4
	77	3
5306-00-158-0697	178	6
	178	6
5340-00-162-5243	173	17
5306-00-165-1934	10	2
5330-00-165-1980	33	25
	111	33
	143	4
	156	2
	158	12
5330-00-166-1098	136	44
	157	21

CROSS-REFERENCE INDEXES

NATIONAL STOCK NUMBER INDEX

STOCK NUMBER	FIG.	ITEM
5330-00-166-1110	136	27
	155	11
5310-00-167-0721	27	6
	47	40
	92	67
5310-00-167-0822	139	6
5310-00-167-0823	46	4
5310-00-167-0839	70	30
	70	49
5330-00-167-5173	16	10
	29	32
	72	2
	130	33
	131	36
	136	31
	137	32
	139	14
	151	11
	157	14
	158	9
	205	17
5330-00-167-5174	3	26
	25	36
	41	14
	43	6
	73	19
	92	33
	136	11
	143	47
	197	6
	203	7
	205	4
5340-00-169-8336	43	19
4730-00-172-0022	119	12
4730-00-172-0028	61	25
	64	21
	185	6
4730-00-172-0034	185	18
	196	18
	199	56
	201	6
4730-00-172-0049	119	42
	120	3
5306-00-172-6356	167	6
5365-00-175-5051	136	14
5120-00-178-1267	223	5
5365-00-182-3868	59	2
	108	23
5310-00-186-0975	25	4
5310-00-186-9550	202	24

STOCK NUMBER	FIG.	ITEM
5310-00-187-7070	75	7
	77	9
5315-00-187-9538	222	17
5315-00-187-9549	202	48
5340-00-188-0471	163	31
3110-00-190-9310	119	18
6140-00-190-9828	90	38
4730-00-193-0871	73	21
	186	25
5315-00-193-0904	104	3
5315-00-193-0925	105	25
	106	24
	106	56
5315-00-193-1069	109	3
5310-00-193-1076	170	12
5365-00-194-4472	47	9
	47	10
	135	11
	155	21
	155	22
	157	9
	157	10
	158	4
	158	5
2990-00-195-9374	47	26
4730-00-196-2067	185	12
4720-00-198-5808	BULK	10
5340-00-200-5218	124	28
5365-00-200-7367	104	31
	105	4
5330-00-202-0882	50	7
5330-00-202-0890	47	39
5330-00-202-0893	47	50
5330-00-202-1468	50	30
4730-00-202-8099	117	52
	142	4
4730-00-203-2866	221	60
5940-00-204-8990	78	14
	81	17
	81	19
5330-00-205-3582	50	27
5365-00-205-4711	64	12
5365-00-205-5118	106	7
5310-00-208-9476	143	16
5310-00-208-9485	68	5
5310-00-209-0786	210	4
	211	4
	212	4
5310-00-209-1869	167	19
	209	56

CROSS-REFERENCE INDEXES

NATIONAL STOCK NUMBER INDEX

STOCK NUMBER	FIG.	ITEM
5310-00-209-5116	94	1
5970-00-213-7747	49	5
5330-00-216-8533	19	8
	21	3
5310-00-220-6552	138	3
5310-00-221-4696	132	12
5305-00-225-3843	68	14
	171	11
	207	51
5306-00-226-4825	27	5
	32	17
	53	13
	92	18
	161	24
	172	61
5306-00-226-4826	15	1
	47	42
	50	19
	58	2
	98	20
	103	13
5306-00-226-4827	29	27
	64	18
	88	1
	139	21
	197	17
5306-00-226-4829	60	8
5306-00-226-4832	25	13
	47	51
5306-00-226-4833	33	6
5306-00-226-4838	204	13
2910-00-226-8862	49	6
3110-00-228-9337	47	45
5340-00-229-9287	163	44
5340-00-229-9294	5	29
5940-00-230-0515	93	17
2920-00-231-7270	68	9
2920-00-231-7385	69	35
5315-00-234-1627	42	21
5330-00-234-4870	108	76
5310-00-235-2428	92	48
5330-00-235-5692	206	51
3120-00-236-1319	65	11
	65	27
	117	6
	130	64
	152	6
	152	16
	153	27
	204	12
3120-00-236-1319	204	27
	206	19
5330-00-237-6928	69	42
	69	50
3120-00-237-6951	46	9
3120-00-237-6956	47	8
3120-00-237-6957	47	5
5330-00-238-7694	5	10
3110-00-239-7702	105	12
5340-00-241-7055	64	8
5330-00-242-7403	149	18
2990-00-244-0235	47	57
4730-00-244-0606	25	42
4730-00-244-6517	201	37
5306-00-245-0953	201	13
5315-00-245-9995	106	41
5315-00-246-0998	136	8
5340-00-246-2746	56	4
5330-00-246-6380	59	8
3110-00-248-5973	104	32
	105	5
	106	4
5360-00-249-3471	156	3
5360-00-249-3500	101	8
5360-00-249-3502	145	15
4730-00-249-3917	168	20
5310-00-251-0088	14	8
	19	6
	21	4
	22	2
	34	16
	37	5
	41	12
	42	43
	45	13
	54	3
	57	14
	60	27
	61	12
	65	29
	67	14
	77	16
	82	9
	83	7
	89	4
	90	8
	91	16
	92	13
	94	4
	100	1

CROSS-REFERENCE INDEXES

NATIONAL STOCK NUMBER INDEX

STOCK NUMBER	FIG.	ITEM
5310-00-251-0088	114	8
	116	4
	117	14
	130	16
	132	42
	143	32
	152	19
	167	18
	168	27
	172	26
	190	4
	191	9
	199	27
	202	21
	204	24
	217	14
5340-00-251-3446	47	25
5315-00-252-2959	109	8
5315-00-252-2961	100	11
	108	62
5365-00-252-4689	106	13
5365-00-252-4753	25	9
5365-00-252-7746	146	6
5306-00-253-3376	209	57
5305-00-253-5615	29	9
	98	42
	126	3
5305-00-253-5624	21	9
5306-00-253-7627	113	17
5305-00-253-7630	18	13
5306-00-253-7864	151	20
5310-00-255-4371	181	16
	183	25
5365-00-256-2465	44	21
5365-00-256-2846	110	7
5306-00-260-4502	201	35
	208	66
	209	71
5306-00-260-4508	4	1
	14	22
	17	1
	22	5
	23	6
	25	29
	32	10
	39	22
	41	10
	44	6
	45	24
	47	2

STOCK NUMBER	FIG.	ITEM
5306-00-260-4508	53	9
	56	16
	59	19
	60	26
	89	6
	92	38
	92	62
	96	19
	100	7
	107	20
	108	29
	109	7
	110	18
	114	16
	116	23
	132	7
	136	24
	138	25
	139	1
	151	34
	162	17
	163	14
	168	23
	171	2
	172	23
	172	74
	184	1
	187	16
	196	19
	203	17
	204	22
	221	47
5306-00-260-4513	130	58
	217	9
5306-00-261-1150	81	11
5306-00-261-1153	29	23
	50	9
	94	15
	110	28
	163	3
	170	7
	171	14
	187	10
	208	7
	208	54
	209	2
	209	70
5306-00-261-3396	199	71
5340-00-261-4042	27	7
5310-00-262-2285	44	8

CROSS-REFERENCE INDEXES

NATIONAL STOCK NUMBER INDEX

STOCK NUMBER	FIG.	ITEM
5310-00-262-4715	69	39
5310-00-262-4789	5	18
	12	2
	124	21
4730-00-263-3122	7	3
	16	16
	42	24
	59	37
5306-00-263-4038	22	8
	39	16
	108	39
	167	55
5306-00-263-7301	4	11
	14	1
	15	10
	17	20
	25	43
	34	21
	53	3
	56	42
	62	5
	64	10
	65	45
	82	4
	89	3
	95	21
	97	24
	110	46
	114	17
	117	16
	118	18
	127	7
	130	11
	130	47
	132	33
	143	36
	169	28
	170	4
	186	2
	222	36
5306-00-263-7303	119	39
5306-00-263-7304	199	46
5306-00-263-8978	16	1
	55	4
	62	3
	68	7
	95	19
	100	20
	117	41
	138	22
5306-00-263-8978	147	3
	151	4
	152	22
	155	7
	161	1
	162	23
	165	2
	168	37
	205	30
	206	11
	207	4
	208	76
	209	12
	221	50
5306-00-263-8981	182	3
5310-00-264-0115	28	45
5310-00-264-0128	92	47
5306-00-268-5798	108	47
	112	8
	151	45
	167	2
	171	4
	208	72
	209	68
5310-00-269-6340	165	9
5306-00-272-1804	34	6
	36	2
5306-00-272-4229	117	26
	126	2
5315-00-272-6760	132	1
5306-00-273-6357	55	7
	61	8
	68	10
	95	10
	117	35
	147	29
	151	22
	153	1
	207	42
	208	65
	209	61
4730-00-273-6686	213	8
	215	13
2530-00-274-4510	139	3
5306-00-275-5012	2	34
	42	6
	63	1
	220	4
5315-00-276-5160	178	38
	179	54

CROSS-REFERENCE INDEXES

NATIONAL STOCK NUMBER INDEX

STOCK NUMBER	FIG.	ITEM
4730-00-277-6988	185	16
4730-00-277-9141	186	16
4730-00-278-0155	25	38
5306-00-281-5130	101	4
5315-00-281-9478	44	32
5365-00-282-5584	47	15
5340-00-282-7505	117	49
5940-00-283-5281	88	4
	93	15
5306-00-285-1368	13	4
	18	20
	56	26
	59	20
	65	41
	130	34
	161	10
5365-00-285-6726	146	8
5365-00-285-7124	40	20
5310-00-285-8867	64	14
4730-00-287-0276	143	8
2805-00-288-3650	11	1
4730-00-289-1243	53	10
5940-00-291-0085	74	5
	83	15
5340-00-291-0372	163	29
5310-00-292-2188	70	46
3110-00-293-9302	60	7
6220-00-295-2860	86	1
5330-00-297-6548	108	36
5310-00-297-7319	70	38
5310-00-297-8836	110	19
	127	4
	222	16
5330-00-298-5837	133	15
	154	10
3020-00-300-6843	148	34
4730-00-307-6426	185	13
2910-00-309-9473	61	9
5330-00-310-6575	135	8
4730-00-314-7754	130	22
	130	28
	130	31
	130	38
	143	45
	214	9
4730-00-318-7288	168	18
3805-00-320-4991	148	35
3805-00-320-5007	148	44
4730-00-322-8457	67	6
5330-00-325-6310	206	1

STOCK NUMBER	FIG.	ITEM
5330-00-325-6310	221	82
5365-00-330-5530	111	3
5310-00-332-5036	148	41
	149	14
3120-00-338-5897	148	39
	148	43
6145-00-347-1171	BULK	14
4030-00-351-7002	33	20
5940-00-351-8077	81	15
	81	22
	92	28
	180	3
	187	5
	0081	28
5305-00-352-7287	12	10
2815-00-352-7415	47	21
5325-00-359-5448	81	8
5305-00-362-7336	5	7
5315-00-362-7367	61	3
5310-00-362-7988	112	5
5310-00-362-8168	28	31
	172	58
	172	60
5999-00-363-6240	185	3
5930-00-363-6599	131	6
5340-00-363-9858	45	5
	110	45
5330-00-363-9866	42	17
5340-00-365-5169	3	30
	5	32
6680-00-365-5325	27	2
2910-00-367-5238	42	14
5330-00-367-5650	101	6
5330-00-367-5653	221	68
5330-00-367-5819	129	14
5365-00-374-1400	104	36
5330-00-393-4054	29	15
5315-00-393-5684	33	11
5325-00-400-8682	164	9
5935-00-401-7527	70	32
2930-00-402-8215	64	17
5306-00-402-9168	50	20
5970-00-403-5912	69	30
5306-00-404-1417	208	26
	209	44
5330-00-404-4090	16	6
5340-00-404-4100	79	12
	92	55
	130	85
5340-00-405-7400	157	16

CROSS-REFERENCE INDEXES

NATIONAL STOCK NUMBER INDEX

STOCK NUMBER	FIG.	ITEM	STOCK NUMBER	FIG.	ITEM
5310-00-407-5566	42	46	5307-00-411-4502	108	78
	43	14	5365-00-411-4584	29	21
	45	11		96	5
	50	3		100	17
	65	42		106	28
	79	11		115	5
	82	5		118	21
	85	8		126	29
	88	13		143	41
	88	15	5340-00-413-4384	130	48
	91	9	5310-00-413-5060	77	18
	96	18	5310-00-413-5144	113	23
	97	6	5310-00-413-6522	131	42
	100	2	5310-00-419-1363	122	5
	107	30		128	13
	108	16		147	27
	108	28		154	23
	110	36	5305-00-419-3410	169	16
	113	7	4730-00-420-9017	208	43
	118	14	5340-00-422-2573	104	34
	127	8	4720-00-423-1001	54	5
	130	19	5306-00-423-8069	108	58
	133	3		147	28
	134	3		154	25
	135	2		199	60
	136	2	5306-00-423-8117	39	4
	137	2		56	22
	137	14		65	53
	138	14		68	17
	139	20		98	10
	143	14		112	9
	145	6		151	27
	146	29		165	13
	156	10		167	23
	164	7		168	13
	171	1		206	47
	172	73		208	17
	188	13		209	72
	190	5	5306-00-423-8119	12	25
	191	10		108	53
	194	4	5306-00-423-8194	7	20
	221	48		14	11
	222	37		19	7
5306-00-409-3684	102	9		25	17
5315-00-409-3703	44	29		38	16
2815-00-409-3899	5	31		39	29
2590-00-410-1903	161	21		59	34
	167	38		65	32
5305-00-411-0777	34	17		66	2
5307-00-411-4501	7	15		82	21

CROSS-REFERENCE INDEXES

NATIONAL STOCK NUMBER INDEX

STOCK NUMBER	FIG.	ITEM
5306-00-423-8194	83	18
	97	7
	98	46
	108	1
	110	50
	113	6
	114	2
	118	13
	122	35
	137	27
	138	13
	167	60
	221	66
5310-00-423-8288	222	13
5306-00-423-8292	108	12
5306-00-423-8313	208	34
5306-00-423-8316	131	14
	153	7
	155	9
5340-00-423-8320	23	11
	116	19
	130	15
2920-00-423-8362	110	32
	127	12
	222	32
5306-00-423-8393	184	6
2815-00-423-8767	48	21
5365-00-423-9251	108	35
5340-00-423-9532	12	13
5365-00-423-9981	167	34
	186	22
5306-00-424-0086	95	24
	97	20
	108	46
	116	8
	128	35
	153	23
	159	7
	160	9
	171	16
	206	39
5306-00-426-2865	5	1
	13	3
	14	17
	65	56
5306-00-426-2870	97	10
	119	37
	126	7
5306-00-426-2922	2	29
	131	13
5306-00-426-2922	206	38
5306-00-426-2932	7	5
	59	12
	113	26
	131	51
	152	8
5306-00-426-2934	126	5
	128	26
	205	23
	206	23
5305-00-426-2936	131	43
	164	12
5306-00-426-2947	122	11
5306-00-426-2966	164	15
5306-00-426-2974	17	11
	95	7
	130	42
	135	1
5306-00-426-2983	90	41
5306-00-426-3080	126	27
	207	53
5305-00-426-3085	7	4
5306-00-426-3139	2	30
	154	18
5306-00-426-3150	128	29
	169	21
	220	1
5306-00-426-3189	47	53
5306-00-426-3209	108	14
	169	12
5306-00-426-3397	25	22
	66	3
	108	21
	119	17
	151	55
	167	3
	207	38
	207	55
	208	62
	209	40
5306-00-426-3400	202	1
5306-00-426-3402	154	24
	168	6
5306-00-426-3404	122	41
	201	16
5307-00-426-3581	13	7
	14	14
5306-00-426-3605	2	10
	122	23
	124	20

CROSS-REFERENCE INDEXES

NATIONAL STOCK NUMBER INDEX

STOCK NUMBER	FIG.	ITEM
5306-00-426-3605	168	32
	201	3
5306-00-426-4171	165	10
5340-00-426-4646	85	7
	92	26
5340-00-426-4656	91	7
	92	10
	110	37
	217	13
5340-00-426-4673	143	48
5340-00-426-4793	43	21
	45	20
	73	2
	92	25
5340-00-426-4803	73	5
	82	11
	92	2
	164	8
5340-00-426-4819	92	11
	143	31
5306-00-426-5062	143	9
	164	6
	185	1
5306-00-426-5835	199	59
4730-00-427-5121	59	35
	67	7
2920-00-427-6421	69	29
5330-00-429-3542	111	2
	150	5
	155	24
	157	29
	206	61
	221	19
5330-00-429-3570	69	7
2910-00-429-5195	173	3
5330-00-431-7137	60	24
5330-00-431-7140	23	9
5310-00-431-7237	172	39
5310-00-431-7239	2	22
	2	26
	34	18
	39	5
	61	7
	62	4
	64	4
	65	48
	66	4
	68	8
	98	3
	106	50
5310-00-431-7239	119	15
	126	1
	129	16
	147	1
	159	8
	206	14
	221	87
5315-00-431-7315	138	21
5330-00-431-7364	221	67
5315-00-431-8915	106	21
5940-00-432-2660	76	10
5310-00-432-4064	28	4
	34	7
	36	1
	41	8
	48	28
	53	14
	56	6
	58	3
	98	21
	102	2
	161	23
	197	16
	202	9
5305-00-432-7954	146	35
5310-00-432-8001	69	32
	92	42
3120-00-432-8120	69	18
5365-00-432-8183	60	23
5365-00-434-1306	33	2
5360-00-434-7167	18	16
5330-00-436-3369	50	15
	135	4
5315-00-438-7015	31	9
5306-00-438-8600	90	3
5310-00-438-8604	90	1
2530-00-439-9264	82	3
	83	19
3120-00-440-8463	18	9
5945-00-445-0865	70	2
5310-00-445-4633	45	7
	132	40
	180	18
	182	8
	183	16
5340-00-448-1795	83	16
5310-00-450-0414	69	10
5305-00-450-0419	163	7
5305-00-450-0420	69	36
5305-00-450-0421	69	27

CROSS-REFERENCE INDEXES

NATIONAL STOCK NUMBER INDEX

STOCK NUMBER	FIG.	ITEM
5305-00-450-0422	69	43
4730-00-450-3480	43	5
	205	6
5306-00-452-1354	37	18
5306-00-455-0459	147	2
	150	4
	169	24
	217	11
5306-00-455-0460	42	36
	206	35
	220	3
5306-00-455-0467	98	34
5360-00-455-7142	157	32
5360-00-455-7191	115	10
2520-00-455-9263	97	3
5306-00-458-1930	56	5
3020-00-459-2656	33	12
4730-00-460-6725	3	10
5310-00-460-8239	154	13
5305-00-465-5947	106	37
5306-00-469-3767	209	34
5306-00-470-5543	5	4
	68	18
	113	24
5310-00-470-5567	17	19
5310-00-470-5568	48	6
5330-00-470-5727	111	34
3120-00-470-5878	46	3
5310-00-470-9833	121	9
	139	18
4820-00-470-9869	218	9
4820-00-471-0026	219	12
5305-00-471-3909	219	25
5365-00-472-5300	111	1
5365-00-476-4985	150	6
	155	23
	221	18
5365-00-478-2920	65	39
	100	13
	131	10
5360-00-478-9867	218	28
3120-00-480-8317	8	7
5940-00-481-9090	172	13
2920-00-484-2799	69	8
5310-00-486-2505	203	31
2590-00-490-5442	22	1
	116	15
5310-00-490-9859	121	10
	124	12
	139	19

STOCK NUMBER	FIG.	ITEM
5340-00-490-9869	167	57
4720-00-491-3007	206	65
3040-00-491-3215	66	10
4730-00-491-9576	34	27
	111	17
	117	24
	131	46
	146	26
	202	37
5305-00-494-1906	170	15
5330-00-494-2763	33	10
	111	31
2520-00-495-6199	119	28
5306-00-496-2234	44	1
	177	19
4730-00-496-7511	61	32
5305-00-497-0372	47	55
5306-00-497-7419	34	4
	36	4
	94	13
	110	27
	174	1
5330-00-498-2905	61	20
5330-00-498-2907	115	9
5365-00-498-2920	61	21
5315-00-498-4657	64	7
	132	22
	0057	57
5310-00-498-8409	37	10
	39	18
5340-00-499-9648	17	6
5330-00-506-1475	25	31
	108	15
5310-00-507-5727	83	21
5310-00-514-6674	94	18
3110-00-516-5490	61	19
6240-00-519-3399	86	2
5340-00-519-7036	28	7
5340-00-527-1594	167	40
5330-00-527-7748	110	42
5330-00-527-7939	144	4
3110-00-529-9205	128	22
2520-00-536-9675	191	19
2640-00-537-2251	140	6
5330-00-541-2704	60	30
4820-00-542-5683	124	7
5330-00-548-6119	181	22
	183	19
5307-00-548-7261	219	4
2910-00-549-4799	50	17

CROSS-REFERENCE INDEXES

NATIONAL STOCK NUMBER INDEX

STOCK NUMBER	FIG.	ITEM
5330-00-549-7691	3	6
5306-00-550-3023	70	3
5310-00-550-3714	90	20
5306-00-550-9129	70	18
	70	52
5330-00-551-0471	219	36
3110-00-554-2974	97	11
4730-00-555-1764	43	20
	56	28
5330-00-555-3807	42	29
	221	88
3110-00-555-5207	61	14
4730-00-555-8291	218	31
5940-00-557-4344	93	10
5330-00-557-8425	136	36
5310-00-557-9414	172	68
	194	18
	221	79
5310-00-559-0070	69	11
	75	15
	92	40
5330-00-561-8286	133	16
	154	9
5310-00-573-5639	101	11
5310-00-576-5752	92	53
	190	6
5930-00-578-3570	88	10
5330-00-580-1215	137	30
	221	3
5330-00-580-1226	110	52
	221	52
5330-00-580-1227	135	16
	137	8
	221	58
5315-00-582-2466	47	30
5310-00-584-5272	70	31
	70	50
	95	25
	97	21
	100	21
	107	13
	108	6
	108	22
	128	34
	142	16
	151	44
	155	8
	157	18
	158	21
	171	3

STOCK NUMBER	FIG.	ITEM
5310-00-584-5272	206	13
	209	13
	221	51
5310-00-584-7888	108	59
	168	33
5310-00-584-7889	169	4
5330-00-585-4284	51	12
5315-00-586-5103	221	13
5330-00-591-3112	29	31
	144	21
5330-00-593-1193	134	5
5330-00-593-1247	206	40
4730-00-595-0385	73	17
	121	1
5310-00-595-6318	156	11
5310-00-595-6378	51	3
5310-00-596-7691	75	21
	77	15
	192	6
	0172	10
5360-00-597-4697	156	7
5360-00-597-8341	221	73
5360-00-597-8351	136	7
	157	12
5340-00-598-9577	144	19
5330-00-599-0936	20	3
5330-00-599-2183	139	16
5330-00-599-6573	218	17
6145-00-600-6052	73	12
	81	16
	81	20
	172	31
	187	6
4720-00-604-6497	32	12
	221	62
5330-00-605-1009	134	15
	156	13
5330-00-613-6499	28	22
5330-00-613-6516	65	5
	130	4
	131	32
	152	10
	152	13
5330-00-613-6519	65	4
	95	12
	117	2
	130	44
	151	66
	152	28
5330-00-613-6522	27	8

CROSS-REFERENCE INDEXES

NATIONAL STOCK NUMBER INDEX

STOCK NUMBER	FIG.	ITEM
5315-00-616-5524	132	19
5315-00-616-5525	9	4
	15	7
	15	15
3110-00-618-0249	108	69
	147	10
5315-00-619-2962	138	27
4730-00-622-5756	186	14
5310-00-627-6128	94	3
3110-00-629-4111	48	10
5310-00-629-9613	98	45
	116	11
	119	10
	119	33
	120	7
	150	3
	151	25
	169	23
2930-00-633-8046	59	9
5365-00-634-7467	199	45
4820-00-637-2576	121	3
	124	22
	147	14
5306-00-637-4927	5	6
	113	25
5306-00-637-4956	7	7
	16	14
	16	18
	17	17
	22	11
	25	39
	34	14
	38	3
	56	19
	59	15
	61	23
	65	8
	114	9
	116	9
	129	13
	130	1
	131	4
	133	20
	134	2
	136	1
	137	13
	146	30
	152	3
	202	41
	217	8

STOCK NUMBER	FIG.	ITEM
5306-00-637-4956	221	57
5310-00-637-9575	79	7
	163	12
	181	3
	183	3
5306-00-638-5332	47	20
5330-00-641-2164	126	23
6240-00-643-0687	83	2
	87	18
	87	24
4730-00-647-3207	25	47
	34	24
	50	5
5365-00-650-7092	180	24
5310-00-655-6151	207	41
5970-00-657-8133	70	28
5310-00-660-1938	48	22
	90	44
5310-00-660-2649	47	56
	84	4
	84	6
	181	4
	183	4
5365-00-663-2215	105	37
5330-00-663-5709	148	1
	151	53
	195	23
5365-00-664-2779	12	18
5360-00-664-4194	136	17
5340-00-664-6881	162	24
	164	19
5365-00-674-6831	219	37
5340-00-675-1297	128	25
3110-00-678-1862	107	11
2640-00-678-8616	140	7
5930-00-683-1628	75	32
5306-00-685-2384	143	13
5365-00-687-3379	103	20
5305-00-688-2111	17	30
	38	21
	39	23
	43	15
	59	30
	130	77
	131	33
	136	26
	152	12
	186	21
	217	5
	0009	9

CROSS-REFERENCE INDEXES

NATIONAL STOCK NUMBER INDEX

STOCK NUMBER	FIG.	ITEM	STOCK NUMBER	FIG.	ITEM
5940-00-688-7204	74	9	5305-00-724-7221	2	4
5330-00-691-9950	22	13		2	13
5306-00-698-2150	17	16		7	24
	41	5		68	1
	66	13		68	12
	107	31		107	25
	108	65		148	5
	130	29		195	22
	131	12		206	4
	170	18	5305-00-724-7222	2	18
	217	18		60	12
5306-00-698-2177	131	39		124	24
5310-00-698-4460	44	2		220	9
4730-00-701-9364	218	31		221	17
5306-00-702-6344	179	42	5305-00-724-7236	124	27
5340-00-702-8534	191	14	5305-00-725-2317	136	12
5305-00-708-3823	96	2		207	69
	108	25	5310-00-725-7382	202	45
	118	5	5305-00-726-2562	6	10
	155	28		7	9
	157	4	5305-00-726-3087	110	4
4730-00-710-5571	131	24	3110-00-727-6901	107	10
	206	29	6240-00-727-8573	87	6
5330-00-710-9591	102	5		87	12
	103	14	3110-00-731-1593	136	42
5330-00-714-2330	119	19	6220-00-731-6084	84	2
5365-00-715-1152	51	9	5310-00-732-0558	219	3
	70	10	5315-00-732-0578	207	74
	145	16		208	73
5930-00-715-1939	90	22		209	67
5306-00-715-7758	81	12	5315-00-732-1005	208	45
2530-00-716-7950	144	10	5306-00-732-7714	133	13
5305-00-717-5460	178	27	5340-00-737-3635	98	38
5305-00-719-5235	120	6		103	42
5305-00-719-5238	207	7	2520-00-738-8662	119	5
	208	70		119	31
	209	68		119	40
5305-00-719-5239	119	7	5310-00-739-9977	133	5
	119	30	2910-00-740-3593	115	8
	119	39	5330-00-741-0674	134	13
	120	8	5330-00-741-2096	150	7
5305-00-719-5241	119	34	6220-00-756-8787	83	5
5310-00-719-5470	70	29		87	5
5305-00-721-5492	0092	12		87	11
5365-00-721-7680	44	18		87	17
	110	44		87	23
	174	11	5310-00-757-6194	82	2
5305-00-723-9382	192	4		83	20
	192	15	6110-00-757-7187	70	12
5305-00-723-9383	207	26	5305-00-758-8117	70	26

CROSS-REFERENCE INDEXES

NATIONAL STOCK NUMBER INDEX

STOCK NUMBER	FIG.	ITEM
5330-00-760-7344	116	17
5315-00-760-7424	105	42
5315-00-760-7425	18	4
	113	5
4730-00-762-2120	34	8
5365-00-762-6106	96	15
	103	27
5365-00-763-0120	16	9
	72	1
	158	8
5310-00-763-8905	87	28
5310-00-763-8921	176	2
5310-00-763-8927	210	13
	211	14
	212	13
5310-00-768-0318	34	19
	64	3
	66	9
	89	9
	90	11
	108	75
	116	12
	119	14
	142	19
	151	26
	153	24
	161	26
	171	7
	205	35
	206	27
	217	12
5930-00-775-7691	90	17
5310-00-776-4909	161	13
5305-00-781-3929	7	6
	59	22
5306-00-783-5183	70	42
5306-00-783-5188	70	43
4730-00-797-6566	214	15
5330-00-797-8389	144	6
5330-00-801-3354	29	22
	34	2
	43	24
	96	6
	100	16
	106	29
	111	16
	115	6
	117	20
	118	4
	125	12
5330-00-801-3354	126	30
	128	20
	130	59
	131	20
	136	21
	137	4
	142	6
	146	9
	150	10
	157	33
	158	7
5365-00-803-7303	115	11
5365-00-804-2025	48	13
5365-00-804-2784	8	13
	206	70
	221	16
5310-00-804-3919	188	6
5310-00-804-4806	88	12
	172	57
	188	12
	202	8
4730-00-804-5092	206	62
5365-00-804-9739	135	14
5310-00-808-6600	124	29
5310-00-808-6604	3	12
5310-00-809-4058	132	15
	164	3
	187	8
	189	7
5306-00-809-7134	66	12
	108	5
	157	27
	162	15
	175	3
	206	10
	207	75
4730-00-809-8818	168	7
	197	5
5305-00-809-9385	208	51
4730-00-809-9427	43	13
	56	33
5310-00-811-2861	0069	5
5360-00-812-0196	70	8
4730-00-812-0924	206	31
5310-00-812-4283	139	23
5306-00-814-6565	17	10
	131	5
5306-00-814-8957	142	20
5306-00-814-8988	45	16
4730-00-816-8558	117	53

CROSS-REFERENCE INDEXES

NATIONAL STOCK NUMBER INDEX

STOCK NUMBER	FIG.	ITEM	STOCK NUMBER	FIG.	ITEM
4730-00-816-8558	142	3	5310-00-843-4593	0090	37
5340-00-818-0498	169	13	5310-00-843-6947	38	13
5365-00-820-5964	199	66	5330-00-843-7194	180	19
5310-00-822-2236	70	7		182	10
5310-00-822-2241	70	9	5315-00-846-0126	207	19
5310-00-827-2821	70	45	5315-00-846-4297	159	10
5310-00-828-7334	55	3	4720-00-847-1710	200	16
	55	5	2520-00-847-4351	17	13
5315-00-828-9781	113	13		41	16
6220-00-832-8774	83	4	5310-00-849-7021	179	44
	87	3	5315-00-849-7237	209	22
	87	9	5315-00-849-9854	208	41
	87	15	5310-00-851-2682	132	31
	87	21		184	4
5360-00-833-3648	218	8	5360-00-851-6804	155	4
5365-00-833-3649	218	13	2930-00-852-1174	56	9
5330-00-833-3650	218	15	5310-00-852-5199	77	10
5330-00-833-3651	218	14	5310-00-852-8266	69	44
5330-00-833-3652	218	18		163	17
5310-00-833-9298	90	19	5945-00-853-2063	75	8
4730-00-834-5035	111	19	5310-00-853-9335	92	46
	139	9	3120-00-854-1068	31	8
5330-00-835-1189	39	27	5330-00-854-1603	138	4
4730-00-835-3003	67	2		144	8
5340-00-835-6504	189	11	5330-00-855-8044	107	6
2920-00-838-9344	70	37	5330-00-855-8047	221	76
3120-00-839-1480	218	22	5330-00-855-8054	92	34
5365-00-839-1481	218	11	5330-00-858-6277	29	17
5365-00-839-1520	218	6	5330-00-858-8224	47	52
5390-00-839-1864	70	6	5330-00-859-0397	111	26
5315-00-839-2326	45	2	5120-00-861-4014	223	4
	127	2	2910-00-862-6825	42	25
	161	20	5330-00-862-6861	61	15
	167	39	5306-00-862-8901	123	6
5315-00-839-5820	145	8		159	1
	177	16	5330-00-865-0404	103	11
5315-00-839-5822	64	6	5310-00-867-1465	219	31
	132	2	5330-00-869-3369	70	16
	207	8	5330-00-869-6566	16	12
	207	15		17	18
	208	55	5306-00-874-4001	126	26
	209	42		142	14
	222	1		161	29
5310-00-842-7616	208	39		161	31
	209	18		170	11
5945-00-843-1778	92	45		206	42
5310-00-843-4593	132	26	5340-00-875-5251	32	13
	207	6	5310-00-877-5797	92	74
	208	71	5920-00-879-6285	77	24
	209	65	5310-00-880-7745	139	7

CROSS-REFERENCE INDEXES

NATIONAL STOCK NUMBER INDEX

STOCK NUMBER	FIG.	ITEM
5330-00-881-1402	97	23
4730-00-882-8621	221	59
5310-00-882-8876	51	2
5330-00-886-2777	59	25
5340-00-889-5209	219	26
5925-00-890-5035	75	12
	92	51
5315-00-891-0815	222	4
5310-00-891-3427	210	14
	211	15
	212	14
2530-00-891-4411	139	25
5315-00-891-5955	129	20
5330-00-892-2503	218	7
5315-00-893-7264	98	39
5330-00-893-9220	126	21
5360-00-894-7275	106	35
5330-00-894-7299	132	52
5306-00-897-9295	14	18
5365-00-898-6703	29	16
3110-00-899-4353	219	6
4730-00-900-3296	185	5
5340-00-900-3300	163	34
	171	17
5305-00-900-4614	178	17
	178	17
5307-00-900-5570	14	6
3110-00-902-4269	138	5
2990-00-903-6938	47	11
4730-00-903-7652	43	18
4730-00-906-1527	143	5
4730-00-908-3193	54	2
6620-00-912-9151	56	7
5330-00-913-8117	42	39
	221	42
5330-00-913-8878	101	2
5330-00-914-0703	70	36
5306-00-916-1943	152	30
5360-00-918-1920	219	39
5360-00-918-3760	218	21
2520-00-920-2040	221	25
5330-00-920-6924	28	29
	144	23
5330-00-921-0054	155	10
	157	22
5330-00-922-6275	136	37
	155	5
5365-00-923-4413	126	25
4820-00-923-7042	136	9
	157	7
5330-00-924-0048	40	2
4730-00-924-7125	60	15
5365-00-924-7128	137	31
	221	2
4730-00-924-7129	134	14
4730-00-924-7886	5	15
	29	30
	32	2
	34	25
	47	19
	56	8
	59	17
	60	14
	64	1
	66	15
	102	12
	112	2
4730-00-924-7975	201	38
3830-00-929-3501	154	14
5330-00-929-5507	60	25
	97	12
5330-00-929-5514	113	10
5330-00-929-5533	137	9
2520-00-929-5607	119	1
	119	25
	122	33
3830-00-929-8149	154	15
5330-00-930-2476	122	9
5306-00-930-5643	41	7
	202	11
	208	31
	209	59
5330-00-930-5736	19	22
	96	1
	100	19
3110-00-930-6289	44	27
	145	3
5310-00-930-7013	90	12
	142	15
	153	13
	155	17
	157	24
	158	22
	178	22
	206	43
	222	2
5310-00-930-7454	166	8
2930-00-930-9098	56	3
2590-00-930-9407	16	8
	65	15

CROSS-REFERENCE INDEXES

NATIONAL STOCK NUMBER INDEX

STOCK NUMBER	FIG.	ITEM	STOCK NUMBER	FIG.	ITEM
2590-00-930-9407	65	20	5330-00-948-6062	118	11
	111	13	5330-00-948-6482	219	38
	121	12	5330-00-948-6632	97	17
	124	15	5330-00-948-6924	0136	4
	128	32	5330-00-948-8440	105	38
	151	18	5330-00-948-9768	221	74
	203	34	3110-00-948-9790	108	9
	204	2	3120-00-948-9964	113	9
	206	15	2910-00-949-0068	42	12
5330-00-931-2219	59	29	5340-00-949-0311	136	5
	106	36	2530-00-949-0666	108	32
	108	51	3110-00-949-1438	12	7
5330-00-931-4522	113	15		103	23
5330-00-931-4533	107	3	2520-00-949-1439	96	13
5330-00-931-8011	56	2		103	29
5330-00-931-8015	7	21	5310-00-950-0039	33	13
5330-00-931-8048	41	2	5360-00-950-2471	96	16
4730-00-931-8501	56	27	5360-00-950-8041	103	22
5360-00-932-0761	96	10	5330-00-950-8223	64	20
2520-00-932-0762	126	18	5365-00-950-8280	221	24
4320-00-932-0782	97	18	5310-00-952-0561	69	31
2530-00-933-3305	0037	37	5315-00-952-7737	47	28
5310-00-933-5940	122	40	5330-00-952-8008	34	11
5310-00-934-9766	172	36		101	13
5365-00-935-5995	110	15		111	20
5330-00-935-9127	154	4		130	56
5330-00-936-2162	112	7		131	18
5330-00-937-5155	135	5		135	18
5365-00-938-5568	112	6		136	13
5330-00-939-0871	113	11		139	10
2540-00-940-0413	181	11		0034	34
	183	11	5330-00-953-1624	150	8
6210-00-941-5863	75	6	6220-00-953-4652	83	1
	75	28		87	19
	77	2	5360-00-953-5205	219	7
5330-00-942-5114	28	28	5360-00-953-5209	219	13
5315-00-942-7167	31	13	4730-00-958-1475	186	19
5310-00-943-2141	119	9	5360-00-960-9326	219	30
5365-00-944-0863	136	6	5330-00-960-9332	KIT	
	157	13	5330-00-962-4510	221	23
5310-00-944-5896	69	38	5305-00-964-0503	68	20
5330-00-944-8281	29	11		105	30
5330-00-945-0564	137	18	3930-00-964-8770	196	5
3110-00-945-8401	106	17	5310-00-965-6000	70	11
5330-00-946-2871	108	18	5330-00-968-5388	59	16
	119	13	3110-00-971-4765	104	13
	122	34	5340-00-971-4820	66	11
5330-00-948-2300	64	16	3120-00-973-8651	98	5
5310-00-948-3280	96	14		98	18
	103	28	5310-00-975-2075	71	4

CROSS-REFERENCE INDEXES

NATIONAL STOCK NUMBER INDEX

STOCK NUMBER	FIG.	ITEM	STOCK NUMBER	FIG.	ITEM
5310-00-975-2075	132	5	5930-01-013-3785	92	15
5330-00-976-4695	70	39	5310-01-014-5495	218	24
5310-00-978-5406	128	12	5305-01-015-6841	5	2
	140	15		17	24
5305-00-978-9374	47	49		19	2
5305-00-978-9378	207	33		23	4
4720-00-981-8519	65	12		28	21
	65	26		37	4
	BULK	9		39	24
5365-00-981-8545	119	27		57	9
5330-00-982-9312	113	19		60	19
5330-00-982-9541	56	24		67	12
5306-00-983-0142	183	10		83	9
5305-00-983-6652	207	71		114	13
5305-00-983-6655	207	70		116	21
5305-00-984-6192	84	7		130	84
	86	4		132	21
5330-00-985-2219	117	12		145	7
5330-00-989-3295	41	4		167	62
2910-00-989-3388	51	8		168	28
3110-00-992-1048	12	5		184	8
2920-00-993-4233	70	23	4720-01-018-6551	202	14
2815-00-994-7407	39	10		202	27
2640-00-995-3138	140	4		202	40
5330-00-997-7230	117	11		BULK	7
2920-00-999-2527	70	22	5360-01-020-4457	157	19
5940-00-999-2534	70	27	5310-01-020-5126	24	6
5340-00-999-3230	51	10		39	13
5330-00-999-5501	108	34		40	3
	119	26	5365-01-020-5721	40	17
	122	30	3120-01-020-5814	40	18
	126	9	5306-01-020-9126	39	12
5330-00-999-5502	137	20	5305-01-021-1508	180	32
5330-00-999-5503	95	4	2910-01-021-1845	36	5
5330-00-999-5505	95	5	5330-01-021-9052	107	33
5310-00-999-8285	90	40	5330-01-021-9880	115	13
	203	23	4730-01-023-8534	143	2
5310-00-999-8288	60	20		143	7
	114	12	5305-01-023-9064	208	69
	138	24	5305-01-023-9672	173	16
	160	4	5310-01-024-3112	143	3
	162	13	5310-01-024-3323	12	14
	167	7		12	22
	168	24		12	34
	176	6	5330-01-024-4862	34	9
5315-00-999-8416	33	18		36	6
3110-01-010-9779	47	18	5330-01-024-9686	70	21
5307-01-011-3163	202	6	5365-01-025-4970	105	9
5975-01-012-3538	218	26	5330-01-026-2850	97	15
5930-01-013-3785	88	5	5360-01-026-3098	29	36

CROSS-REFERENCE INDEXES

NATIONAL STOCK NUMBER INDEX

STOCK NUMBER	FIG.	ITEM	STOCK NUMBER	FIG.	ITEM
5305-01-026-9518	15	14	5330-01-039-3874	110	39
	17	28	5330-01-043-5565	65	40
	18	11		130	67
	19	4		131	8
	21	1	5940-01-043-6687	78	1
	35	4		92	22
	41	1	5310-01-043-6821	181	20
	57	23		183	22
	68	19	5305-01-045-2775	218	30
	124	6	5310-01-047-0423	172	35
	130	49	2520-01-047-6754	112	1
	131	7	5925-01-048-2643	189	17
	133	17	5330-01-049-0553	33	3
	137	1	2815-01-049-8552	22	10
	151	67		116	14
	168	35	2815-01-050-8003	4	10
	171	15		59	40
	203	24	5365-01-050-8010	64	19
5340-01-026-9527	221	22	2990-01-050-8011	61	6
4720-01-026-9540	65	33	2930-01-050-8012	61	11
5340-01-026-9553	56	35	2930-01-050-8013	61	13
	206	7	2815-01-050-8017	6	12
5365-01-026-9555	16	11	5306-01-050-8020	3	13
	128	33	2815-01-050-8021	2	24
	151	19	2815-01-050-8022	6	13
5330-01-026-9557	95	17	2815-01-050-8033	9	7
	117	43	3110-01-050-8048	3	14
	151	21	2930-01-050-8058	61	10
	152	18	5305-01-050-8064	3	22
	155	18	2815-01-050-8141	8	3
	157	8	2815-01-050-8142	8	2
	206	71	2910-01-050-9979	50	28
5355-01-028-1354	110	2	2910-01-050-9980	50	13
2940-01-028-8459	108	30	2910-01-050-9982	47	34
3120-01-029-2580	155	13	2910-01-050-9983	50	26
3030-01-030-4369	68	22	5310-01-050-9984	50	21
3110-01-031-9372	144	3	2910-01-050-9985	50	23
3040-01-032-3129	49	7	5306-01-051-0004	26	1
5330-01-032-3336	202	35		113	18
2990-01-032-7259	47	29		129	5
5365-01-032-7272	105	22	5310-01-051-0012	50	4
5365-01-035-4900	131	35		50	18
	134	16	2910-01-051-2299	51	7
	136	32	5310-01-051-2300	15	13
	137	33	5305-01-051-2302	5	17
5365-01-036-0010	136	22	2815-01-051-2305	11	3
5310-01-036-8730	199	20	5305-01-051-2306	12	21
6220-01-037-5622	87	14		12	33
3110-01-037-7207	199	13	5310-01-051-2307	12	17
5310-01-038-3645	47	48	5360-01-051-2308	12	9

CROSS-REFERENCE INDEXES

NATIONAL STOCK NUMBER INDEX

STOCK NUMBER	FIG.	ITEM	STOCK NUMBER	FIG.	ITEM
5306-01-051-2310	12	1	4720-01-051-6773	65	60
5340-01-051-2311	56	31		203	3
4730-01-051-2312	34	1		203	11
	130	60		203	37
4730-01-051-2313	143	42		205	8
2815-01-051-2316	11	6		BULK	5
2815-01-051-2334	10	7	5306-01-051-7598	159	11
2815-01-051-2337	12	23	3830-01-051-7599	151	7
2815-01-051-2338	12	15		151	41
2815-01-051-2340	11	4		151	51
2910-01-051-2341	52	5		151	60
2815-01-051-2343	5	30		152	25
5360-01-051-2344	11	2	4730-01-051-7600	152	15
2815-01-051-2355	10	6	4730-01-051-7601	65	10
5310-01-051-2360	29	24		65	28
	34	3	4720-01-051-7602	205	2
	36	3		205	10
	47	32		205	14
	94	16	4730-01-051-7605	205	3
	110	26		205	15
	162	6	4730-01-051-8745	132	46
	167	13	2520-01-052-3917	130	50
5307-01-051-2364	52	4		131	37
5330-01-051-2401	5	33	5365-01-053-0180	3	27
4730-01-051-3134	130	9		110	40
	136	25	5330-01-053-2691	151	38
4730-01-051-5256	65	6		153	2
	130	3	3805-01-053-2692	151	1
	131	34		152	21
	136	33	4730-01-053-2694	130	41
	137	26		130	73
	152	11		130	79
4730-01-051-5257	19	9	2530-01-053-2698	154	16
	65	3	3805-01-053-2703	43	25
	117	1	4710-01-053-2705	131	48
	117	9	5310-01-053-2717	222	9
	130	45	5330-01-053-2907	70	14
	152	27	5340-01-053-3843	132	58
5340-01-051-6767	65	59	5310-01-053-4509	28	5
	130	7		28	33
	130	40	5940-01-053-4521	93	13
	130	70	5365-01-053-4523	60	6
	130	74	5340-01-053-4524	22	14
	130	80	2990-01-053-4534	4	12
	130	88		7	18
	131	30		14	10
	203	4	2930-01-053-4539	60	11
	203	12		169	15
	203	38	5307-01-053-4540	21	7
	206	58	2920-01-053-4541	69	45

CROSS-REFERENCE INDEXES

NATIONAL STOCK NUMBER INDEX

STOCK NUMBER	FIG.	ITEM
4730-01-053-4546	54	8
5305-01-053-4553	194	15
2990-01-053-4566	7	22
2910-01-053-4578	28	30
2910-01-053-4585	28	27
2910-01-053-4592	28	6
2930-01-053-4603	59	7
2815-01-053-4621	18	7
2815-01-053-4622	18	6
4720-01-053-4633	54	1
2940-01-053-4642	21	8
5360-01-053-4656	17	5
3020-01-053-4659	68	23
2940-01-053-4677	17	27
2940-01-053-4680	23	10
5330-01-053-4684	59	23
5330-01-053-4685	17	23
5330-01-053-4686	60	3
2940-01-053-4692	23	7
2910-01-053-4695	51	4
2815-01-053-4700	18	17
5315-01-053-4721	16	5
5305-01-053-4742	69	51
2920-01-053-4743	69	40
2920-01-053-4744	69	6
2920-01-053-4745	69	1
5305-01-053-4758	69	9
2920-01-053-4782	69	41
4730-01-053-4825	28	35
5330-01-053-4829	14	3
5330-01-053-4832	16	7
5330-01-053-4833	59	5
5330-01-053-4844	69	48
2815-01-053-4853	22	12
5330-01-053-7021	70	15
5310-01-053-7312	169	1
5330-01-053-7320	3	8
5365-01-053-7324	199	15
5315-01-053-7342	3	4
3020-01-053-7346	7	13
5360-01-053-7350	49	1
5305-01-053-7366	33	7
4720-01-053-7374	BULK	6
3110-01-053-7564	199	14
2815-01-053-8007	12	32
5306-01-053-8047	161	4
4730-01-053-8079	151	8
	152	26
2910-01-053-8157	108	31
4130-01-054-5311	68	6

STOCK NUMBER	FIG.	ITEM
5310-01-058-8071	37	21
	161	8
	163	35
	172	62
	178	2
2940-01-058-8073	21	5
2920-01-058-9099	67	4
	91	15
5940-01-058-9112	42	34
	75	27
	76	4
	76	9
	78	9
5940-01-058-9133	42	2
	75	26
5330-01-058-9176	56	11
5330-01-058-9177	56	18
2920-01-059-0864	190	14
5940-01-059-0873	81	21
5940-01-059-0885	193	4
2520-01-059-0901	98	49
6220-01-059-0911	187	3
5365-01-059-0914	82	1
	87	26
5330-01-059-0961	56	21
5310-01-059-0992	90	18
5330-01-059-7141	115	3
5310-01-059-7159	134	19
	137	23
2520-01-059-7193	98	48
5315-01-059-7198	104	28
	105	13
	106	15
4720-01-059-9327	56	38
2520-01-059-9356	103	34
2520-01-059-9381	118	17
2520-01-059-9409	103	32
2520-01-059-9414	103	4
4730-01-059-9493	25	37
	73	18
5310-01-059-9502	108	26
5340-01-059-9645	138	20
5330-01-060-0308	95	8
	151	32
5340-01-060-0309	95	18
	117	42
	151	30
	155	15
	206	72
5330-01-060-0737	122	21

CROSS-REFERENCE INDEXES

NATIONAL STOCK NUMBER INDEX

STOCK NUMBER	FIG.	ITEM	STOCK NUMBER	FIG.	ITEM
5330-01-060-0737	124	18	5935-01-062-7141	193	5
	221	70	5305-01-062-7143	181	10
5330-01-060-0745	122	38	5310-01-062-7144	145	25
5340-01-060-2023	122	10	5310-01-062-7149	181	6
5365-01-060-2087	44	14		183	5
3110-01-060-3730	128	4	4730-01-062-7150	186	7
3110-01-060-3731	128	5		202	51
5315-01-060-3748	123	9	5330-01-062-7164	194	10
5306-01-060-4404	128	38	5330-01-062-7165	194	2
5365-01-060-4700	128	24	5330-01-062-7167	194	5
4330-01-061-0246	221	28	5330-01-062-7170	191	11
5310-01-061-4004	202	5	2540-01-062-7171	191	18
5310-01-061-8633	92	61	5325-01-062-7172	191	15
5330-01-061-9378	3	31	2530-01-062-7175	221	12
4710-01-062-3719	61	31	5305-01-062-7176	221	15
5340-01-062-5196	132	56	2530-01-062-7177	221	8
4730-01-062-5203	130	8	2530-01-062-7179	221	11
	130	69	4730-01-062-7184	117	7
	130	75		130	63
4730-01-062-5206	131	44		152	17
	132	33		153	26
4730-01-062-5214	125	13	5305-01-062-9897	202	12
2530-01-062-5317	157	15	5310-01-062-9899	84	5
4720-01-062-5930	19	11		94	5
	19	16		110	30
	BULK	1		127	10
4730-01-062-5932	117	33		181	9
	0117	38		183	9
4730-01-062-5933	131	31		222	34
5305-01-062-6007	7	2	2540-01-062-9902	183	13
	142	18	4730-01-062-9928	130	55
	147	15	5307-01-063-0644	13	6
	153	12	4710-01-063-0673	186	8
5325-01-062-6128	221	56	4730-01-063-0684	19	17
9340-01-062-6129	221	55	5310-01-063-0686	180	30
5360-01-062-6135	221	6	4310-01-063-0729	68	4
2530-01-062-6137	221	14	4130-01-063-0737	193	2
4730-01-062-6179	16	4	2520-01-063-0771	133	2
5330-01-062-7128	194	16	5365-01-063-0778	168	36
	207	61	2520-01-063-0781	133	6
5306-01-062-7129	183	18	2540-01-063-0802	189	19
2540-01-062-7131	181	15	2540-01-063-0804	194	12
	181	19	2540-01-063-0805	189	12
	183	21	2520-01-063-0812	133	18
2540-01-062-7132	181	18	2520-01-063-0813	133	14
	183	23	2520-01-063-0814	133	9
5315-01-062-7137	189	14	2520-01-063-0815	133	10
	190	15	5365-01-063-2978	87	25
2940-01-062-7140	190	21	5310-01-063-2983	181	21
5935-01-062-7141	191	13		183	20

CROSS-REFERENCE INDEXES

NATIONAL STOCK NUMBER INDEX

STOCK NUMBER	FIG.	ITEM
5310-01-063-3001	44	22
	222	18
4730-01-063-5692	117	45
	206	74
5305-01-063-5735	181	14
	183	14
5310-01-063-5822	181	17
	183	24
	0092	14
5310-01-063-7852	90	21
4730-01-063-8263	56	34
	205	11
5330-01-063-9839	58	4
5330-01-063-9840	27	3
5315-01-064-1014	31	6
4730-01-064-3790	29	12
	47	23
	48	36
	157	1
5340-01-064-3819	90	30
2520-01-064-6625	107	15
5365-01-064-6701	118	8
5365-01-064-6702	118	9
4730-01-064-7391	152	5
2590-01-064-7492	37	17
5340-01-064-7512	186	20
3010-01-064-7524	107	16
3110-01-065-7169	108	42
2530-01-065-9086	111	29
5315-01-065-9087	44	15
	110	43
5310-01-066-0499	146	2
	187	18
5307-01-066-0525	56	15
5330-01-066-0673	103	8
5310-01-066-0689	69	3
5360-01-066-1431	132	6
2590-01-066-1455	103	9
4730-01-066-4586	130	35
	139	15
	205	16
4720-01-066-4587	BULK	4
5310-01-066-4618	8	10
4730-01-066-4619	43	12
2815-01-066-4622	6	5
2815-01-066-4623	3	23
5315-01-066-4624	6	9
	25	34
3110-01-066-4625	3	9
2815-01-066-4627	25	32
5315-01-066-4707	25	44
5365-01-066-4718	48	12
2910-01-066-4732	48	17
2815-01-066-4735	12	31
2815-01-066-4736	12	19
	12	20
2930-01-066-4740	60	4
2910-01-066-4742	26	4
5340-01-066-4744	47	12
2815-01-066-4748	12	24
2910-01-066-4752	46	5
4730-01-066-4773	117	46
	152	34
	153	18
5330-01-066-4804	24	3
2815-01-066-5106	11	5
2920-01-066-5207	92	66
4810-01-066-5266	136	18
2815-01-066-5282	17	26
3110-01-066-5287	108	43
5340-01-066-5303	17	25
5330-01-066-5363	4	9
	22	9
	59	13
5330-01-066-5364	4	13
	7	17
	14	9
2910-01-066-5410	28	38
5365-01-066-7039	134	7
2920-01-066-7642	90	16
4730-01-066-7651	65	23
	204	1
	206	16
2910-01-066-7693	31	10
4820-01-066-8441	33	5
4730-01-066-8597	39	2
5310-01-066-9165	122	39
5315-01-066-9168	98	27
	121	8
	122	27
	124	14
2520-01-066-9170	201	8
5365-01-067-1426	19	13
	19	18
	117	39
	151	64
	152	33
	153	19
	206	56
	206	75

CROSS-REFERENCE INDEXES

NATIONAL STOCK NUMBER INDEX

STOCK NUMBER	FIG.	ITEM	STOCK NUMBER	FIG.	ITEM
5315-01-067-1727	105	21	5310-01-078-2992	208	53
5315-01-067-2168	48	4	4820-01-079-1486	144	22
3020-01-067-5321	15	12	2530-01-081-2752	144	18
2520-01-067-5621	106	45	3120-01-084-4832	199	36
4720-01-067-6332	34	12	5365-01-085-3125	144	5
	67	3	5340-01-085-8085	181	8
2520-01-067-7978	20	2	5940-01-087-0285	74	2
5340-01-067-8042	116	2		78	3
	130	20	3120-01-087-7063	144	2
5360-01-068-0037	50	14	5330-01-088-6106	44	33
5360-01-068-0038	50	24		131	47
5310-01-068-2238	148	8		156	6
3120-01-068-3473	144	7	5330-01-088-6871	117	29
4730-01-068-6077	90	5	5340-01-089-9350	205	31
4730-01-068-6081	61	27	4820-01-090-2178	155	3
4730-01-068-7106	103	18	4730-01-094-7469	117	22
5340-01-068-7154	126	8		130	52
4730-01-068-9756	205	9		142	10
	205	13		143	19
5315-01-069-0755	60	18		143	22
5330-01-069-0760	95	23		143	25
	151	3		143	26
	152	20		146	16
5315-01-069-0765	222	20		146	24
5340-01-069-0788	103	21	5310-01-094-8810	44	7
2520-01-069-0806	104	19		77	17
	105	8		81	10
2540-01-069-0855	158	10		83	8
2520-01-069-0889	7	16		89	2
5307-01-069-1418	14	15		110	17
5365-01-069-1441	82	23		139	2
3120-01-069-2667	6	2		163	15
4730-01-069-4045	218	29		170	5
	219	14		177	17
5330-01-069-4801	46	2		187	15
5330-01-069-4803	28	37		203	18
5330-01-069-5128	10	1		204	14
5330-01-069-5188	47	33	5306-01-094-9106	18	18
5330-01-070-5411	KIT			57	5
5310-01-070-6979	161	5		114	4
2990-01-070-8548	49	10		132	50
5340-01-071-2047	79	1		133	4
	110	29		143	40
5340-01-071-2545	48	3	5310-01-094-9906	168	2
4730-01-072-1366	168	17	2540-01-095-0037	180	11
2940-01-072-9416	37	16	4730-01-095-0075	117	23
2940-01-072-9417	37	15		125	5
4730-01-074-0907	143	46		130	53
5365-01-074-3568	181	12		142	9
	183	12		143	20

CROSS-REFERENCE INDEXES

NATIONAL STOCK NUMBER INDEX

STOCK NUMBER	FIG.	ITEM
4730-01-095-0075	143	23
	143	27
	146	21
4730-01-095-0833	125	6
	130	54
	142	8
	143	18
	143	24
4730-01-095-0834	125	7
	146	18
5305-01-095-1239	173	8
5310-01-095-1247	45	19
5310-01-095-1249	161	27
	167	42
5330-01-095-1255	144	12
5360-01-095-1834	115	4
4730-01-095-2126	23	2
5310-01-095-4631	2	14
	108	11
	169	11
	199	47
5977-01-095-5206	144	13
3120-01-095-5804	105	10
4730-01-095-8459	130	65
5365-01-095-8663	105	34
	196	16
	199	32
5330-01-096-0912	32	8
2910-01-096-4344	30	2
4820-01-096-5062	67	1
5310-01-096-6395	167	25
5305-01-096-6938	180	27
2920-01-096-9247	77	26
3010-01-096-9250	108	48
4720-01-097-0392	117	47
3010-01-097-0513	126	16
4820-01-097-0515	103	19
6220-01-097-1881	0087	7
6210-01-097-1973	77	21
6685-01-097-2058	77	19
5365-01-097-3237	48	2
5940-01-097-3578	74	4
	80	6
5930-01-097-4299	92	1
5930-01-097-4307	77	22
6220-01-097-4320	87	13
6220-01-097-4321	0087	1
4730-01-097-4727	101	10
4730-01-097-4728	117	40
3020-01-097-4784	104	26

STOCK NUMBER	FIG.	ITEM
5310-01-097-5847	144	15
2520-01-097-6326	104	22
	105	16
	105	27
	106	30
	106	55
5310-01-097-6607	90	27
5310-01-097-6612	90	26
	180	28
5330-01-097-6618	151	14
	153	5
	153	11
5330-01-097-6620	106	22
5330-01-097-6621	100	12
	108	13
5330-01-097-6622	108	44
5330-01-097-6623	117	25
	153	6
5330-01-097-6624	133	19
5330-01-097-6625	128	14
5330-01-097-6628	97	4
5330-01-097-6630	186	18
5330-01-097-6632	100	8
5330-01-097-6634	135	7
5310-01-097-6720	65	54
	89	8
	117	36
	151	28
	151	46
	160	8
	161	2
	162	14
	165	1
	165	12
	167	1
	168	10
	205	22
	205	34
5360-01-097-6811	126	11
5365-01-097-6827	161	6
5365-01-097-6828	162	19
5365-01-097-6829	169	22
5365-01-097-6833	108	4
5935-01-097-7239	85	4
	91	2
	91	11
	92	5
	172	3
	172	30
5935-01-097-7240	82	16

CROSS-REFERENCE INDEXES

NATIONAL STOCK NUMBER INDEX

STOCK NUMBER	FIG.	ITEM	STOCK NUMBER	FIG.	ITEM
5935-01-097-7240	180	6	3110-01-097-9505	104	27
	187	7	5307-01-097-9521	160	10
5935-01-097-7247	80	7	3040-01-097-9577	108	68
	93	22	3020-01-097-9607	107	9
5306-01-097-7744	50	2	5340-01-097-9615	110	14
5306-01-097-7874	110	51	3110-01-097-9616	128	43
5340-01-097-8125	162	12	3110-01-097-9632	108	3
	167	21	5365-01-097-9642	42	37
	168	39		169	19
5330-01-097-8142	60	22		220	11
5305-01-097-8184	144	24	5365-01-097-9643	189	13
5310-01-097-8230	92	73	5305-01-097-9881	103	10
5330-01-097-8235	119	6	5305-01-097-9884	156	9
	119	32	5935-01-097-9974	90	23
	119	41	3110-01-097-9999	128	23
5355-01-097-8255	127	5	3110-01-098-0000	69	20
3020-01-097-8472	108	37	5360-01-098-0283	103	26
3020-01-097-8473	108	10	5360-01-098-0284	103	39
5305-01-097-8927	110	1	5310-01-098-0624	95	11
5306-01-097-8930	167	41		117	27
	168	11		151	2
5306-01-097-8931	168	1		153	8
5310-01-097-8955	19	20		153	15
	65	2		162	22
	95	15		169	9
	117	4		170	13
	130	57		206	52
	152	29		217	3
	217	10	5310-01-098-0625	114	15
5307-01-097-8995	180	22		167	44
	182	12	5310-01-098-0626	154	22
5360-01-097-9194	103	37	5310-01-098-0634	81	24
5360-01-097-9195	105	26		94	9
5360-01-097-9196	194	7		163	4
5340-01-097-9213	185	11		170	8
5365-01-097-9217	107	5		171	12
5365-01-097-9218	108	73		182	2
5305-01-097-9388	75	37	5365-01-098-1173	170	10
	77	31	5365-01-098-1174	170	16
	145	32	5360-01-098-1867	103	33
	163	11	5360-01-098-1870	103	25
	189	6	5360-01-098-1871	103	36
5305-01-097-9389	173	15	5330-01-098-3167	135	15
5305-01-097-9391	174	14	5330-01-098-3168	147	22
5310-01-097-9416	178	1	5330-01-098-3169	147	11
5330-01-097-9428	102	4	5305-01-098-3779	172	9
5330-01-097-9429	128	36	5315-01-098-3925	159	9
5330-01-097-9434	163	41	5315-01-098-3928	103	2
5330-01-097-9435	163	38	5315-01-098-3929	103	3
5330-01-097-9438	163	42	2520-01-098-3947	103	35

CROSS-REFERENCE INDEXES

NATIONAL STOCK NUMBER INDEX

STOCK NUMBER	FIG.	ITEM	STOCK NUMBER	FIG.	ITEM
3020-01-098-3976	108	71	5310-01-101-6056	145	14
5340-01-098-3997	103	6	4720-01-101-7196	56	29
5340-01-098-4008	117	15	5930-01-101-7845	73	20
5330-01-098-6232	126	33	4320-01-101-8685	KIT	
5325-01-098-6305	82	12		195	24
5325-01-098-6306	82	13	2590-01-101-9630	138	19
5315-01-098-6453	145	21	2520-01-102-1583	103	31
5315-01-098-6458	98	30	6685-01-102-1652	73	10
5315-01-098-6463	145	13	5315-01-102-1781	31	5
5340-01-098-6669	108	2	5315-01-102-1782	31	16
5340-01-098-6683	73	6	5305-01-102-1785	42	20
3020-01-098-6868	107	17	5340-01-102-1788	22	6
3020-01-098-7412	104	1	5340-01-102-1789	61	28
2590-01-098-9330	82	18	5340-01-102-1790	53	5
	183	7	5340-01-102-1791	206	46
6620-01-098-9865	73	1	5330-01-102-1794	25	2
6620-01-098-9866	73	7	5330-01-102-1807	4	4
5330-01-098-9988	154	2	5330-01-102-1808	4	6
5330-01-098-9992	163	43		45	22
3110-01-099-0021	108	66	5330-01-102-1812	38	12
3110-01-099-0023	108	67	5330-01-102-1813	57	22
5315-01-099-0059	45	1	5330-01-102-1814	150	13
	127	1	3120-01-102-1820	26	2
5315-01-099-0060	145	17	3120-01-102-1821	15	9
3110-01-099-0108	108	45	5305-01-102-1824	199	69
5340-01-099-0109	130	17	5305-01-102-1825	132	30
5340-01-099-0110	130	18	5305-01-102-1826	221	7
5306-01-099-1624	118	3	5325-01-102-1842	28	9
5365-01-099-2939	167	56	3110-01-102-1995	107	19
5365-01-099-2941	147	25	3020-01-102-2390	25	14
2930-01-099-4405	69	37	5365-01-102-2458	32	9
5315-01-099-7351	145	26	5365-01-102-2459	56	25
3110-01-099-8007	69	19	5365-01-102-2467	25	26
5315-01-099-8048	132	11	5365-01-102-2468	25	6
5365-01-099-8160	101	3	5310-01-102-2477	2	11
6620-01-100-0431	77	28		2	19
5365-01-100-8867	121	13		2	31
	124	17		140	16
5365-01-100-8868	121	11		154	17
	124	16		168	5
3110-01-100-9048	144	20		176	4
5940-01-101-2456	78	12		199	58
	85	2		201	4
	93	11	5310-01-102-2478	82	20
	172	4	5310-01-102-2479	136	43
2930-01-101-2690	60	21	5307-01-102-2484	14	19
4720-01-101-2715	56	32	5307-01-102-2485	10	4
2815-01-101-2731	6	4	5330-01-102-3251	6	3
6210-01-101-2794	81	5	5330-01-102-3252	33	16
6210-01-101-2795	81	4	5360-01-102-3253	158	24

CROSS-REFERENCE INDEXES

NATIONAL STOCK NUMBER INDEX

STOCK NUMBER	FIG.	ITEM	STOCK NUMBER	FIG.	ITEM
5330-01-102-3254	28	18	5305-01-102-7327	79	6
5330-01-102-3255	104	37	5306-01-102-7332	101	12
5330-01-102-3256	104	38	5305-01-102-7337	163	28
	105	19	5305-01-102-7341	92	68
	106	33		163	16
5330-01-102-3257	14	20	5305-01-102-7342	106	3
5330-01-102-3258	14	5	5305-01-102-7343	122	28
5330-01-102-3259	14	12	5305-01-102-7344	122	4
5330-01-102-3260	47	14	5305-01-102-7345	122	16
5330-01-102-3261	29	26	5330-01-102-7375	110	33
5330-01-102-3262	32	1	5307-01-102-7426	159	13
5330-01-102-3263	41	15	5340-01-102-7660	106	19
5330-01-102-3264	59	4	5340-01-102-7935	22	4
5330-01-102-3265	59	32	5340-01-102-7936	28	26
5330-01-102-3266	57	8	5340-01-102-7937	28	15
5315-01-102-3437	48	32	5340-01-102-7938	28	11
5315-01-102-3438	29	4	3120-01-102-7939	203	30
5315-01-102-3440	50	16	5340-01-102-7941	202	43
5315-01-102-3441	67	9	5305-01-102-7951	166	6
5340-01-102-3518	25	40	5310-01-102-7961	180	17
5340-01-102-3519	206	26		182	6
5360-01-102-3521	71	3	5310-01-102-7963	166	3
5330-01-102-3522	221	32	5330-01-102-7978	124	1
5330-01-102-3525	5	26	5365-01-102-8027	117	30
5330-01-102-3526	32	4	5365-01-102-8028	136	10
5330-01-102-3527	37	20	5365-01-102-8151	161	30
5310-01-102-3536	206	22	5365-01-102-8152	168	4
5340-01-102-3538	3	3	5365-01-102-8153	175	4
5340-01-102-3539	14	16	5330-01-102-8388	33	8
5340-01-102-3540	108	49		33	15
5330-01-102-3562	60	9	5330-01-102-8389	45	15
5325-01-102-3577	42	44	5330-01-102-8390	48	14
	221	46	5330-01-102-8391	221	26
2520-01-102-3718	108	19	5305-01-102-8453	163	21
3040-01-102-4166	119	5		192	12
	119	31	5325-01-102-8526	190	13
	119	40	5315-01-102-8570	161	9
5340-01-102-4351	206	25	5930-01-102-8836	42	32
5340-01-102-4352	206	45		221	38
5330-01-102-4354	48	18	5305-01-102-9822	90	24
5330-01-102-5599	97	28	5305-01-102-9823	92	41
5330-01-102-5600	108	72	5310-01-102-9865	83	11
3040-01-102-5746	104	29		116	5
3010-01-102-6721	126	17	5310-01-102-9866	120	5
5307-01-102-7126	3	29	5310-01-102-9867	138	7
5306-01-102-7319	131	23	5310-01-102-9868	167	20
5306-01-102-7320	145	5	5315-01-103-0060	105	32
5306-01-102-7321	106	20	5315-01-103-0061	145	29
5305-01-102-7325	75	16	5340-01-103-0273	185	4
5305-01-102-7326	75	10	5365-01-103-1656	48	38

CROSS-REFERENCE INDEXES

NATIONAL STOCK NUMBER INDEX

STOCK NUMBER	FIG.	ITEM	STOCK NUMBER	FIG.	ITEM
5310-01-103-1781	128	42	5365-01-105-2285	107	18
5315-01-103-1897	75	19	2530-01-105-2649	156	15
5340-01-103-3664	90	7	9905-01-105-4111	142	17
5360-01-103-3721	50	25		146	25
2990-01-103-3726	2	8	3010-01-105-5743	108	17
5305-01-103-5728	106	51	5330-01-105-6722	128	6
5940-01-103-6808	76	5	5330-01-106-0940	157	30
5340-01-103-6825	12	16	4730-01-106-3973	202	15
5306-01-103-7039	25	7		202	26
	138	10		202	39
5365-01-103-7156	49	8	4720-01-106-4290	56	36
5325-01-103-8016	188	4	4730-01-106-6789	143	38
5340-01-103-8753	16	13	4730-01-106-7246	56	37
5305-01-103-8797	92	72	5330-01-106-7288	65	5
4810-01-103-9066	103	41	5306-01-106-8225	208	12
2815-01-104-0831	5	27		209	5
5305-01-104-1051	110	5	5330-01-107-1248	4	7
5330-01-104-1091	111	30		59	38
	111	35	4730-01-107-2346	151	40
5930-01-104-2202	58	1	2990-01-107-2418	46	1
2590-01-104-4081	200	6	2815-01-107-2589	8	4
2590-01-104-4097	200	10	5305-01-107-3549	40	4
5330-01-104-4565	222	31	5305-01-107-3550	38	14
5305-01-104-4845	169	5	5330-01-107-3621	17	4
5310-01-104-4874	163	24	5365-01-107-3893	74	11
4320-01-104-5113	113	2	5340-01-107-4472	5	25
2910-01-104-5155	28	14	5340-01-107-4475	110	34
2910-01-104-5199	28	24	5365-01-107-4480	128	27
2910-01-104-5200	28	41	5305-01-107-4621	29	42
4720-01-104-6442	37	8	5330-01-107-4646	206	37
9905-01-104-6445	143	37	5365-01-107-4914	147	13
	146	14	5306-01-107-5159	61	17
9905-01-104-6446	142	12	5305-01-107-5161	104	6
	146	22	5310-01-107-5172	50	10
5340-01-104-8659	97	25	5330-01-107-5181	37	14
2520-01-105-0078	99	1	5330-01-107-5182	97	26
5306-01-105-1790	160	5	5330-01-107-5183	44	5
	167	10	5330-01-107-5187	44	9
	177	18	5330-01-107-5188	88	11
5305-01-105-1804	124	2	5315-01-107-5308	48	34
5305-01-105-1805	166	11	5315-01-107-5309	31	7
5310-01-105-1849	138	6	5315-01-107-5310	31	15
5310-01-105-1863	90	43	5340-01-107-5458	31	14
5310-01-105-1865	166	10	5330-01-107-6747	200	2
3120-01-105-1935	123	10		200	9
3120-01-105-1948	0123	3	3120-01-107-7339	104	25
5325-01-105-1968	79	8	4010-01-107-7375	42	22
	180	26	2920-01-107-7533	71	1
2590-01-105-2013	200	5	6685-01-107-7540	73	14
5340-01-105-2272	153	22	5365-01-108-0400	61	16

CROSS-REFERENCE INDEXES

NATIONAL STOCK NUMBER INDEX

STOCK NUMBER	FIG.	ITEM	STOCK NUMBER	FIG.	ITEM
5305-01-108-0649	30	8	5310-01-113-1309	179	41
5305-01-108-0653	160	7	5310-01-113-1310	195	13
5306-01-108-2510	90	42	5310-01-113-1315	177	9
5306-01-108-3740	2	2	5330-01-113-1318	154	3
5306-01-108-3741	48	27	5305-01-113-2264	179	31
5330-01-108-3780	106	44	5310-01-113-2283	179	8
5310-01-108-7525	188	5	5315-01-113-2356	48	30
5310-01-108-7537	44	13	5340-01-113-3419	95	20
	113	16	5310-01-113-4047	177	13
5310-01-108-7538	66	8	5315-01-113-4175	179	39
5310-01-108-7539	222	24	5305-01-113-9768	155	20
5365-01-108-7881	156	5	5340-01-114-0214	178	10
5340-01-108-8855	5	24	5310-01-114-0640	178	19
5365-01-108-8866	119	20	5306-01-114-0960	178	24
5365-01-108-8867	119	21	5307-01-114-1318	148	9
5305-01-109-0590	172	33	2610-01-114-3732	141	1
9905-01-109-4261	142	22	5310-01-114-3807	178	8
	146	23		178	8
2815-01-109-4374	1		5325-01-114-5106	53	6
	1	1	5306-01-115-0703	179	18
5310-01-109-5388	173	9	5305-01-115-0716	177	8
5330-01-109-6775	38	1	5307-01-115-0811	179	7
5365-01-109-7081	158	17	5307-01-115-2619	159	14
5315-01-109-7651	147	5	5340-01-116-2640	42	45
5315-01-109-8115	44	30	3120-01-116-9203	179	10
5306-01-110-1130	167	58	2940-01-117-5552	67	11
5306-01-110-1886	98	44	5360-01-117-7673	179	55
5330-01-110-1923	194	9	5310-01-117-9326	30	4
6620-01-110-4620	92	32	5310-01-118-1191	195	14
5310-01-110-7920	2	1	5310-01-118-2476	70	33
	206	3	9390-01-118-2586	172	78
5365-01-110-8004	3	25	9390-01-118-5082	173	4
5930-01-111-7673	131	17	5930-01-118-6366	75	23
	0045	45	3030-01-118-7494	61	22
2540-01-112-0525	180	13	2520-01-118-7506	122	1
5330-01-112-6663	7	1	5365-01-118-8822	40	15
5330-01-112-6666	195	5	5935-01-118-8884	74	7
5310-01-112-7934	25	3		76	3
5330-01-112-7956	97	13		91	4
3120-01-112-9254	164	11		91	12
5310-01-113-0578	178	4		92	23
3120-01-113-0639	179	9		93	19
5365-01-113-0709	151	13	5935-01-118-8885	93	18
	153	4	5310-01-119-1442	177	5
	153	10	5935-01-119-1467	74	10
5360-01-113-0868	179	3		80	5
5340-01-113-0897	90	31		93	16
5365-01-113-0924	178	26	5306-01-119-1758	199	39
5310-01-113-1308	42	8	5999-01-119-4109	78	6
	220	6	5999-01-119-5999	76	7

CROSS-REFERENCE INDEXES

NATIONAL STOCK NUMBER INDEX

STOCK NUMBER	FIG.	ITEM
5330-01-119-7210	100	4
5330-01-119-8947	108	7
5935-01-120-3853	81	27
	85	5
	92	6
5310-01-120-5540	187	13
5340-01-120-9453	160	6
5330-01-120-9944	196	11
5940-01-121-0365	80	4
	93	20
5340-01-121-0525	28	17
5305-01-121-1646	190	7
5305-01-121-1667	170	9
5365-01-121-2073	196	21
5330-01-121-2763	196	13
5365-01-122-2107	160	3
5330-01-122-2466	196	14
5305-01-122-5468	110	6
5310-01-122-9066	222	26
6620-01-123-1332	59	6
5330-01-124-2451	47	22
	48	35
	65	38
	92	9
	100	14
	101	9
	115	2
	129	11
	131	11
	131	25
	131	27
	140	2
	140	13
	157	2
	206	28
5365-01-124-6834	147	30
3120-01-125-9052	6	2
3040-01-126-7461	127	13
2815-01-126-9545	8	12
3120-01-127-5376	25	19
	42	33
	73	16
	121	2
6145-01-128-1623	42	3
5330-01-128-4134	140	9
5365-01-128-4302	171	18
5310-01-128-5136	148	7
2930-01-128-5834	KIT	
5330-01-128-6817	KIT	
5330-01-128-6818	KIT	
5330-01-128-8991	172	55
3120-01-129-0710	6	2
5330-01-129-0803	KIT	
5330-01-129-0804	KIT	
5330-01-129-0805	KIT	
5365-01-129-0960	171	5
3120-01-129-4536	6	2
5365-01-129-5894	66	6
5365-01-129-5895	66	5
6145-01-129-9953	42	5
5310-01-130-4273	179	20
5935-01-130-5359	91	13
2910-01-131-0101	5	11
5305-01-131-2921	121	4
4820-01-132-0582	219	40
5330-01-133-0568	KIT	
5315-01-134-8857	147	17
5307-01-135-7339	159	15
5330-01-135-7503	105	40
2815-01-135-7514	16	17
5330-01-136-4548	KIT	
5365-01-138-4783	155	25
5977-01-138-7043	70	44
2920-01-138-7045	70	41
2920-01-138-7046	70	47
2920-01-138-7194	70	40
2590-01-140-9058	70	35
5330-01-142-7005	KIT	
5310-01-143-0560	139	27
2640-01-144-1573	140	3
3110-01-145-6202	48	25
3110-01-145-6997	6	6
4720-01-146-5898	180	25
5330-01-147-4999	KIT	
4730-01-148-0865	106	25
5330-01-148-5891	135	12
6220-01-148-7953	87	2
	87	8
6645-01-149-9176	75	25
2940-01-150-3865	115	7
6220-01-150-4033	86	3
5315-01-151-1102	106	27
3020-01-151-3963	110	9
5930-01-151-4767	73	15
4820-01-152-5578	103	43
1650-01-153-1633	103	38
5930-01-153-2396	75	33
2910-01-154-6878	42	28
	221	37
5330-01-155-4283	146	27

CROSS-REFERENCE INDEXES

NATIONAL STOCK NUMBER INDEX

STOCK NUMBER	FIG.	ITEM	STOCK NUMBER	FIG.	ITEM
5340-01-155-4484	103	12	3110-01-161-4027	108	70
4730-01-155-5055	125	8	5306-01-161-5500	177	4
4730-01-155-5059	132	48	5340-01-161-7575	179	6
5340-01-155-5280	125	9	4820-01-161-9628	143	12
5365-01-155-5308	103	40	5355-01-162-4050	179	53
3120-01-156-5188	15	4	2540-01-162-4162	178	35
5340-01-156-5479	42	40	4820-01-162-4342	156	8
	221	43	4730-01-162-6354	143	30
5961-01-156-7247	79	2	2540-01-162-6406	178	31
	92	57	3040-01-162-7517	179	12
5360-01-156-8042	102	7	5340-01-162-9915	167	16
4730-01-156-9977	206	49	4720-01-163-7180	117	10
9905-01-157-1024	178	29	2540-01-163-7365	177	3
3040-01-157-4383	179	40	5360-01-163-9446	178	37
5925-01-157-4604	92	39		179	27
5340-01-157-5981	222	19	5305-01-164-2318	156	1
5365-01-157-6895	110	12	5340-01-164-6470	164	5
5306-01-158-1154	47	46		167	11
4820-01-158-6861	195	17	4730-01-164-7821	221	75
2540-01-158-7559	179	48	2910-01-164-7906	42	23
2540-01-158-7560	179	46	5340-01-165-5848	177	10
2540-01-158-7590	178	11	2540-01-165-6000	179	28
3040-01-159-0918	179	2	2540-01-165-6001	179	25
5340-01-159-1023	167	12	2540-01-165-6002	179	26
5330-01-159-1075	221	84	2540-01-165-8181	179	56
3120-01-159-1169	110	10	2540-01-165-8318	179	23
	110	57	4730-01-165-9540	221	77
2540-01-159-2975	177	6	2540-01-166-1171	179	24
3040-01-159-2981	179	58	5315-01-167-3655	208	37
2540-01-159-2990	178	9	5340-01-167-4216	69	17
3040-01-159-3593	179	5	3110-01-168-1053	132	28
5340-01-159-4468	178	5	5330-01-168-5091	195	9
2540-01-160-1607	178	18	4010-01-169-7162	178	25
5310-01-160-2034	207	52	2540-01-171-3356	179	21
	207	68	5340-01-172-2629	178	20
	208	6	5340-01-172-5535	107	32
	208	8	6210-01-172-5974	75	2
	209	77		77	7
5310-01-160-2038	178	12	5340-01-172-6320	179	16
5360-01-160-2412	178	39	5340-01-173-3721	177	7
5365-01-160-2426	104	30	5340-01-173-3861	167	54
	106	5	9905-01-174-0961	202	32
2590-01-160-3599	94	12	2950-01-175-3881	40	23
5365-01-160-4614	103	17	5340-01-176-8124	179	50
5340-01-160-5759	179	38	5910-01-176-8877	94	7
5340-01-160-6907	167	50	5310-01-178-0069	70	51
3120-01-160-7617	78	7	2910-01-178-9971	34	5
5340-01-161-0594	77	27	2815-01-179-3109	3	7
5340-01-161-2783	136	28	3040-01-179-6557	128	37
5340-01-161-4023	179	43	7690-01-180-0919	190	11

CROSS-REFERENCE INDEXES

NATIONAL STOCK NUMBER INDEX

STOCK NUMBER	FIG.	ITEM	STOCK NUMBER	FIG.	ITEM
5365-01-180-8785	24	4	2590-01-199-3102	209	15
5340-01-180-8836	127	3	4330-01-199-3109	221	1
5930-01-181-0054	189	15	4730-01-199-4269	213	5
5340-01-181-0884	41	6		214	6
4720-01-181-8496	143	17		215	6
5945-01-182-2460	92	54	4730-01-199-4857	221	29
2910-01-182-7834	30	10	2590-01-199-6746	222	14
2910-01-182-7836	50	8	4330-01-199-6770	221	4
2815-01-183-4649	11	9	4730-01-199-7804	213	1
4820-01-183-5961	30	12		214	1
2510-01-184-0559	57	4		215	1
2510-01-184-0560	57	17	6210-01-200-0788	75	36
5330-01-184-0920	5	22	4330-01-200-0867	221	10
2520-01-184-1042	67	8	5930-01-200-7882	151	10
2540-01-184-2289	184	10	4730-01-200-8433	0038	38
5945-01-184-4079	92	59	2990-01-200-9098	55	8
2590-01-184-4150	94	6	5360-01-202-2099	221	9
2590-01-184-4151	94	2	4010-01-202-6761	207	44
4730-01-184-4274	206	64		209	52
2910-01-184-4574	30	1	5340-01-202-9165	221	30
4710-01-184-4741	3	17	4730-01-202-9311	206	55
5340-01-184-6537	190	2	4330-01-203-1250	60	17
5360-01-184-6668	30	3	5340-01-203-2587	0167	52
2910-01-184-7087	51	1	3040-01-203-8620	209	1
5305-01-184-7693	208	28	5930-01-204-5836	207	72
	209	28		208	67
5365-01-185-0624	190	16		209	69
3120-01-185-0628	6	1	5340-01-205-5773	213	2
4730-01-185-5347	203	3		214	2
	204	3		215	2
3120-01-186-1302	106	16	6150-01-207-8050	90	14
5310-01-187-6105	179	4	2920-01-207-9671	70	20
	179	22	4730-01-208-2036	139	26
5940-01-188-0009	91	3	5340-01-209-7389	54	7
	92	7	5305-01-210-3844	207	31
	92	24		209	30
	93	12	6250-01-213-6163	78	4
	172	2	6150-01-214-5751	90	15
	181	7	5305-01-214-7569	173	13
5340-01-188-7748	203	29	2540-01-217-8134	179	15
6150-01-195-8726	69	16	2540-01-218-1868	179	17
2510-01-196-1284	83	22	2540-01-218-1869	179	51
5930-01-196-6835	207	34	5315-01-219-2487	179	14
	208	63	2590-01-222-5493	88	7
3930-01-198-0862	207	14	2590-01-222-5494	93	1
	209	15	2590-01-222-5495	92	19
2520-01-198-7408	120	2	2590-01-222-5496	91	1
5975-01-198-9915	207	64	6140-01-222-5548	90	32
	208	2		90	34
	209	73	2590-01-222-8738	42	1

CROSS-REFERENCE INDEXES

NATIONAL STOCK NUMBER INDEX

STOCK NUMBER	FIG.	ITEM
5355-01-226-8782	145	30
3120-01-226-9564	207	27
	209	27
5310-01-229-1969	214	8
	215	8
6145-01-229-2077	71	8
	71	10
5340-01-232-5358	180	29
5310-01-236-9975	199	26
	208	18
4320-01-242-3022	134	1
3040-01-242-4728	111	9
4710-01-242-4896	117	50
4710-01-242-4897	130	21
4710-01-242-4898	130	26
4730-01-242-6344	65	13
	65	25
	204	11
	204	26
	206	18
3040-01-242-6414	196	2
2930-01-242-8046	57	1
4710-01-243-0092	139	8
4710-01-243-0093	204	16
4720-01-243-0870	34	26
4720-01-243-0871	50	6
3040-01-243-1024	207	77
	209	45
	209	78
3020-01-243-1044	64	11
2590-01-243-3614	92	17
5945-01-243-8215	92	58
3930-01-245-3724	212	1
	213	1
	215	1
3040-01-245-3742	210	12
	211	13
	212	12
4720-01-245-6604	214	14
	215	14
2990-01-245-6701	208	44
2510-01-245-6702	212	8
2530-01-245-6904	140	1
3040-01-245-9210	207	17
	209	20
3040-01-245-9214	210	8
5340-01-246-1861	55	2
	55	6
5930-01-246-2481	207	29
	209	32

STOCK NUMBER	FIG.	ITEM
5930-01-246-2911	207	24
	209	25
5365-01-246-4101	136	39
4720-01-246-5988	214	12
	215	12
5365-01-247-6875	199	70
5365-01-247-9062	137	24
5340-01-248-1219	210	11
	211	11
	212	11
5360-01-248-1226	207	25
	209	26
5310-01-248-1272	207	20
	209	21
4730-01-248-5154	213	10
	215	7
5310-01-248-7070	208	49
4010-01-248-7203	208	27
5315-01-249-1051	209	43
5340-01-249-1169	210	2
	211	2
	212	2
5340-01-249-1707	210	3
	211	3
	212	3
5360-01-249-3611	208	48
5365-01-249-7697	111	23
5340-01-251-1596	208	52
5340-01-251-1598	207	28
	209	29
3120-01-251-3492	208	50
5315-01-252-0722	208	38
3020-01-254-0088	105	11
3040-01-254-5564	46	7
4730-01-254-8683	42	30
	221	36
5935-01-255-8020	42	4
	88	8
	91	5
	92	20
	93	21
5935-01-256-0170	91	6
	93	14
5305-01-256-8504	40	11
	45	4
	94	8
5310-01-266-2481	42	41
	45	21
	82	6
	92	70

CROSS-REFERENCE INDEXES

NATIONAL STOCK NUMBER INDEX

STOCK NUMBER	FIG.	ITEM
5310-01-266-2481	114	7
	134	12
	137	28
	138	15
	151	35
	185	2
	187	14
	188	14
	191	20
	194	17
	221	44
	222	38
2950-01-267-8489	40	5
5330-01-270-1752	47	3
6145-01-276-7544	BULK	17
6145-01-276-7545	BULK	18
5940-01-285-5146	76	2
	78	11
	180	4
	180	8
4730-01-286-0225	146	28
	202	16
5340-01-286-6227	82	7
5340-01-287-6723	204	29
5340-01-288-1632	149	9
5340-01-288-7013	149	7
5340-01-288-7014	149	16
5940-01-293-7470	74	13
3020-01-295-3662	200	12
5307-01-296-7755	5	21
5306-01-297-1055	71	5
6150-01-298-1505	90	13
2590-01-298-2313	222	15
4710-01-298-3307	25	18
2990-01-298-5358	38	9
6150-01-299-4514	92	29
	93	24
2590-01-301-0256	75	5
2540-01-302-2564	174	9
4710-01-302-7741	185	7
5940-01-303-4978	73	13
	74	3
	76	1
	78	10
	82	17
	85	3
	92	4
	92	31
	93	9
2930-01-303-5756	56	40

STOCK NUMBER	FIG.	ITEM
3130-01-304-2479	108	79
4720-01-304-4497	213	9
3040-01-304-4508	209	11
3040-01-304-4600	208	58
5340-01-304-5288	207	43
2940-01-304-7134	37	2
9905-01-305-2463	208	20
5340-01-305-2484	208	74
	209	63
5340-01-305-2485	208	59
	209	41
7690-01-305-4868	207	59
7690-01-305-4875	207	58
7690-01-305-4876	208	9
	209	9
3040-01-306-6340	208	16
5340-01-306-8616	207	9
5360-01-306-9979	210	7
	211	7
	212	7
7690-01-308-3935	208	22
	209	48
3040-01-311-6861	200	1
6350-01-312-6331	89	5

CROSS-REFERENCE INDEXES

PART NUMBER INDEX

CAGEC	PART NUMBER	STOCK NUMBER	FIG.	ITEM
61208	A-2669-DS		98	14
C4C43	A-5679	4820-00-542-5683	124	7
65683	A-896		202	49
17284	AEM0C-1287		55	1
88044	AN101118	5306-00-638-5332	47	20
88044	AN960-716	5310-00-167-0822	139	6
88044	AN960-816L	5310-00-167-0839	70	30
			70	49
31408	ASP-1BV		111	21
02432	ATU47	3110-00-516-5490	61	19
70523	AVM29086		174	8
70523	AVM29088		174	15
70523	AVM31670		172	40
76275	A1638-2	5310-00-167-0823	46	4
99517	A180-119MILP25732	5330-01-124-2451	47	22
			48	35
			65	38
			92	9
			100	14
			101	9
			115	2
			129	11
			131	11
			131	25
			131	27
			140	2
			140	13
			157	2
			206	28
46529	A183073		66	14
65508	A5920-1	9905-01-305-2463	208	20
26953	A8069-006		7	14
65508	A8287-1	5340-01-249-1707	210	3
			211	3
			212	3
52555	A8288-1		210	6
			211	6
			212	6
65508	A8291-1	3040-01-245-3742	210	12
			211	13
			212	12
65508	A8293-1	5340-01-249-1169	210	2
			211	2
			212	2
52555	A8306-1		210	9
			210	12
			211	12
			212	9
80020	A87769-10	5310-00-595-6378	51	3
52555	A9125-1		208	23

CROSS-REFERENCE INDEXES

PART NUMBER INDEX

CAGEC	PART NUMBER	STOCK NUMBER	FIG.	ITEM
52555	A9125-1		209	49
65508	A9126-1	7690-01-308-3935	208	22
			209	48
52555	A9140-1		208	24
			209	50
52555	A9290-1		207	65
			208	3
			209	74
52555	A9291-1		207	66
			208	4
			209	75
65508	A9296-1	5360-01-306-9979	210	7
			211	7
			212	7
65508	A9304-1	3120-01-226-9564	207	27
			209	27
65508	A9304-2	3120-01-251-3492	208	50
11083	A9307-1		208	78
11083	A9307-2	3040-01-243-1024	207	77
			209	45
			209	78
52555	A93071-1		207	76
52555	A9308-1		213	4
			215	4
65508	A9313-1	5310-01-248-1272	207	20
			209	21
65508	A9377-1	4730-01-199-7804	213	1
			214	1
			215	1
65508	A9378-1	5340-01-205-5773	213	2
			214	2
			214	4
			215	2
65508	A9379-1	4730-01-199-4269	213	5
			214	6
			215	6
52555	A9380-1		213	6
			214	5
			215	5
65508	A9381-1	3930-01-245-3724	212	1
			213	1
			215	1
52555	A9384-1		214	13
52555	A9385-1		213	3
			214	3
			215	3
65508	A9386-1	5310-01-229-1969	214	8
			215	8
52555	A9387-1	4730-01-248-5154	213	10
			215	7
52555	A9388-1		215	15

CROSS-REFERENCE INDEXES

PART NUMBER INDEX

CAGEC	PART NUMBER	STOCK NUMBER	FIG.	ITEM
52555	A9389-1		214	11
			215	11
52555	A9390-1		215	9
52555	A9409-1		207	46
			209	53
52555	A9410-1		207	45
			208	29
			209	54
52555	A9411-1		207	47
			208	30
			209	55
52555	A9412-1		208	15
			209	10
52555	A9413-1		208	56
			209	36
65508	A9419-1		208	42
		5310-01-248-7070	208	49
65508	A9457-1	7690-01-305-4876	208	9
			209	9
52555	A9563-1		208	11
			209	7
52555	A9563-2		208	13
			209	8
52555	A9564-1		209	6
52555	A9814-1		211	9
94364	B-2-19480	5330-01-110-1923	194	9
98410	B-2195-10X	5940-01-087-0285	78	3
64959	BA98203-116		179	47
08129	BB33HT31		140	10
30966	BDT-413	5340-01-097-9213	185	11
99066	BK721005	5340-01-085-8085	181	8
73433	BL-1288	3020-01-295-3662	200	12
91929	BZ-2R55-A2-S	5930-01-013-3785	88	5
			92	15
60380	B168XPSOH	3110-00-902-4269	138	5
65508	B2356-5	3040-01-304-4600	208	58
65508	B2364-1		207	16
			208	60
			209	17
65508	B2364-2	5315-01-252-0722	208	38
65508	B2365-1	3040-01-245-9210	207	17
			209	20
59730	B251G	5940-00-481-9090	172	13
65508	B2702-1	3040-01-304-4508	209	11
11081	B2886		157	17
65508	B2892-1	5930-01-246-2911	207	24
			209	25
52555	B2913-1		207	30
			209	31
52555	B3017-1	5360-01-249-3611	208	48
65508	B3128-1	5930-01-246-2481	207	29

CROSS-REFERENCE INDEXES

PART NUMBER INDEX

CAGEC	PART NUMBER	STOCK NUMBER	FIG.	ITEM
65508	B3128-1	5930-01-246-2481	209	32
65508	B3133-1	5340-01-251-1598	207	28
			209	29
65508	B3777-3	5340-01-251-1596	208	52
52555	B3779-1		208	47
65508	B42214-1	5360-01-248-1226	207	25
			209	26
65508	B6984-1	5930-01-204-5836	207	72
			208	67
			209	69
65508	B6984-4	5930-01-196-6835	207	34
			208	63
			209	35
11083	B7C85-1		208	77
65508	B8290-1	5340-01-248-1219	210	11
			211	11
			212	11
52555	B9123-1		208	21
			209	47
52555	B9341-1		208	40
65508	B9382-1	4720-01-246-5988	214	12
			215	12
65508	B9382-2	4720-01-245-6604	214	14
			215	14
52555	B9399-1		213	7
65508	B9399-2	4720-01-304-4497	213	9
65508	B9408	4010-01-248-7203	208	27
94364	C-1-3589		190	3
60380	C-1314-Q	3110-01-145-6997	6	6
82484	C-1421-1	5310-00-255-4371	181	16
			183	25
94364	C-2-15807		192	7
60380	C-434-Q	3110-01-145-6202	48	25
79457	C-636		172	15
53930	C-657971		196	10
75272	CDV-1617	5340-01-089-9350	205	31
99862	CL-10-SW		199	21
75272	COV-0413	5340-00-448-1795	83	16
75272	COV-0709	5340-01-071-2047	79	1
			110	29
75272	COV-2113	5340-00-404-4100	79	12
			92	55
			130	85
99066	CP721084	2540-01-062-7131	181	15
			181	19
			183	21
78500	CP92N53	3040-01-102-4166	119	40
75272	COV2515		204	23
65508	C2510-1	5340-01-305-2485	208	59
			209	41
65508	C2571-2	5340-01-305-2484	208	74

CROSS-REFERENCE INDEXES

PART NUMBER INDEX

CAGEC	PART NUMBER	STOCK NUMBER	FIG.	ITEM
65508	C2571-2	5340-01-305-2484	209	63
79470	C3169X6	4730-00-057-5555	3	16
78553	C33746-1213-4	5310-01-096-6395	167	25
78553	C33795-3816-4	5340-01-097-8125	162	12
			167	21
			168	39
79470	C3409X4	4730-00-595-0385	73	17
			121	1
65508	C3928-3	2990-01-245-6701	208	44
78553	C40699-017		92	35
52555	C46806-1		207	32
			209	33
79470	C5165X8	4730-00-314-7754	214	9
79470	C5205X6X6	4730-00-322-8457	67	6
79470	C5515X5	4730-00-906-1527	143	5
78553	C7956-1420-24	5340-00-900-3300	163	34
			171	17
52555	C9124-1		208	35
			209	60
52555	C9231		209	62
52555	C9231-1		208	64
65508	C9346-1	3040-01-306-6340	208	16
52555	C9426-1		209	51
94364	D-2-17928		192	1
94364	D-2-18489		192	13
94364	D-2-18490		192	2
08179	DIV-400579-560		40	29
65508	D10269-1	3040-01-245-9214	210	8
65508	D8307-1	2510-01-245-6702	212	8
52555	D8674		210	8
65508	D9289-1	5975-01-198-9915	207	64
			208	2
			209	73
52555	D98151		210	1
56854	EA-2328-000D		177	2
60380	EA38688		145	23
45152	EE45626	5310-00-627-6128	94	3
18265	EGB14-0012		37	12
02978	ERNA245	5310-00-584-5272	70	31
			70	50
52555	E9137		207	1
65508	E9138		208	1
43249	F-75443-AL	5930-01-200-7882	151	10
76871	FH3320		172	66
81349	F02A125V10AS	5920-00-879-6285	77	24
81349	F02A32V15A	5920-00-012-0151	75	30
96105	F190034	4730-00-089-2515	32	16
			59	11
98933	GCH36		81	3
08129	GY31C		140	12
27737	GZ2540		196	15

CROSS-REFERENCE INDEXES

PART NUMBER INDEX

CAGEC	PART NUMBER	STOCK NUMBER	FIG.	ITEM
27737	GZ2540		199	33
7140C	HKP-LW-HH	5920-00-118-8195	75	29
			77	23
60038	HM218200-4-468		147	9
60038	HM218248-4-468	3110-01-161-4027	108	70
52595	HR10	5310-01-128-5136	148	7
84247	HR12	5310-01-118-1191	195	14
74842	HS23048		174	10
08484	HTM-350	4730-01-106-7246	56	37
08484	HTM250L		37	7
14726	H116		75	34
11083	IF9233	5310-00-262-4789	124	21
70485	IR693	5340-00-527-1594	167	40
76005	J-6210-4	5340-00-818-0498	169	13
60380	JTT 1211	3110-00-930-6289	44	27
60380	JTT1211	3110-00-930-6289	145	3
81343	J536550		117	48
59556	K-500-EN-0431	5330-01-148-5891	135	12
30327	KF10-06PS	4730-00-622-5756	186	14
30327	KF12-08PS	4730-00-318-7288	168	18
92250	KR8		145	28
24956	LE721125A-1	2540-00-123-7226	181	5
37099	LFW2055	2940-01-117-5552	67	11
82458	LK-1213-S	5310-01-114-0640	178	19
01843	LK721014A	2540-00-940-0413	181	11
			183	11
75174	LSB25	3120-00-973-8651	98	5
84147	L10993-2	4730-00-277-6988	185	16
11083	L1143	5306-00-285-1368	13	4
			18	20
			56	26
			59	20
			65	41
			130	34
			161	10
11083	L1169	5306-00-862-8901	123	6
			159	1
11083	L1329	5306-00-268-5798	108	47
			112	8
			151	45
			167	2
			171	4
			208	72
			209	68
11083	L1352	5306-00-426-2865	5	1
			13	3
			14	17
			65	56
11083	L1558	5306-00-426-2870	97	10
			119	37
			126	7

CROSS-REFERENCE INDEXES

PART NUMBER INDEX

CAGEC	PART NUMBER	STOCK NUMBER	FIG.	ITEM
11083	L1732		119	11
11083	L2070	5306-00-698-2150	17	16
			41	5
			66	13
			107	31
			108	65
			130	29
			131	12
			170	18
			217	18
11083	L2315	5305-01-107-5161	104	6
11083	L472	5306-00-261-1150	81	11
61208	M-2086-AC		98	8
91929	MD3211-Q	5930-00-578-3570	88	10
96906	MMS90728-8		143	28
96906	MS-24665-628		161	33
96906	MS15001-1	4730-00-050-4203	161	12
96906	MS15003-1	4730-00-050-4208	119	4
			119	36
			147	7
			185	14
			199	8
			201	14
			207	22
			209	23
96906	MS15003-2	4730-00-172-0022	119	12
96906	MS15003-4	4730-00-172-0028	61	25
			64	21
			185	6
96906	MS15003-6	4730-00-172-0034	185	18
			199	56
			201	6
96906	MS15006-1	4730-00-172-0049	119	42
96906	MS15573-3	6240-00-155-7866	77	6
96906	MS16562-279	5315-00-080-1541	210	10
			211	10
			212	10
96906	MS16624-1087	5365-00-804-2025	48	13
96906	MS16624-1255	5365-00-663-2215	105	37
96906	MS16624-1362	5365-01-025-4970	105	9
96906	MS16624-1425	5365-00-205-5118	106	7
96906	MS16624-1437	5365-00-634-7467	199	45
96906	MS16624-1450	5365-00-200-7367	104	31
			105	4
96906	MS16625-1062	5365-00-687-3379	103	20
96906	MS16625-1087	5365-00-804-9739	135	14
96906	MS16625-1165	5365-00-252-4753	25	9
96906	MS16625-1200	5365-00-804-2784	8	13
			206	70
			221	16
96906	MS16632-1050	5365-00-256-2846	110	7

CROSS-REFERENCE INDEXES

PART NUMBER INDEX

CAGEC	PART NUMBER	STOCK NUMBER	FIG.	ITEM
96906	MS16633-1025	5365-00-721-7680	44	18
			110	44
96906	MS16997-58	5305-00-978-9378	207	33
96906	MS16998-29	5305-00-983-6652	207	71
96906	MS16998-32	5305-00-983-6655	207	70
96906	MS18154-41	5306-01-158-1154	47	46
96906	MS18154-58	5305-00-115-9526	9	6
			32	15
			35	1
			42	42
			43	22
			45	9
			45	26
			54	6
			64	15
			73	3
			79	10
			83	12
			85	9
			88	16
			90	29
			91	8
			110	35
			116	1
			130	14
			130	86
			136	19
			137	25
			143	33
			151	57
			176	5
			186	26
			190	12
			191	21
			194	3
			221	45
96906	MS19059-2412	3110-00-100-6149	31	17
96906	MS20066-304	5315-00-732-0578	207	74
			208	73
			209	67
96906	MS20066-379	5315-00-849-7237	209	22
96906	MS20066-381	5315-00-732-1005	208	45
96906	MS20066-734		207	21
96906	MS21044-C10	5310-00-079-6474	207	23
			209	24
96906	MS21044N3	5310-00-877-5797	92	74
96906	MS21044N6	5310-00-950-0039	33	13
96906	MS21318-21	5305-00-253-5615	29	9
			98	42
			126	3
96906	MS21318-43	5305-00-253-5624	21	9

CROSS-REFERENCE INDEXES

PART NUMBER INDEX

CAGEC	PART NUMBER	STOCK NUMBER	FIG.	ITEM
96906	MS21333-57	5340-00-282-7505	117	49
96906	MS24523-22	5930-00-683-1628	75	32
96906	MS24665-134	5315-00-839-5820	145	8
			177	16
96906	MS24665-353	5315-00-839-5822	64	6
			132	2
			207	8
			207	15
			208	55
			209	42
			222	1
96906	MS24665-418	5315-00-187-9549	202	48
96906	MS24665-498	5315-00-849-9854	208	41
96906	MS24665-628	5315-00-846-0126	207	19
96906	MS24665-752	5315-00-846-4297	159	10
96906	MS24665628		0161	15
96906	MS24667-32L	5305-01-210-3844	207	31
			209	30
96906	MS24667-51	5305-00-900-4614	178	17
			178	17
96906	MS25036-108	5940-00-143-4780	71	12
			93	4
			172	5
			172	12
			172	32
96906	MS25036-109	5940-00-283-5281	88	4
			93	15
96906	MS25036-110	5940-00-143-4793	74	14
			80	2
			82	19
			92	21
96906	MS25036-111	5940-00-204-8990	78	14
			81	17
			81	19
96906	MS25036-112	5940-00-143-4794	77	13
96906	MS25036-113	5940-00-113-8183	93	6
96906	MS25036-114	5940-00-113-9826	74	6
96906	MS25036-117	5940-00-114-1306	93	2
96906	MS25036-120	5940-00-557-4344	93	10
96906	MS25036-124	5940-00-114-1311	93	5
96906	MS25036-153	5940-00-143-4774	83	14
			88	9
			93	7
			93	25
			191	7
96906	MS25036-154	5940-00-230-0515	93	17
96906	MS25036-156	5940-00-143-4775	93	8
			191	6
96906	MS27183-10	5310-00-809-4058	132	15
			164	3
			187	8

CROSS-REFERENCE INDEXES

PART NUMBER INDEX

CAGEC	PART NUMBER	STOCK NUMBER	FIG.	ITEM
96906	MS27183-10	5310-00-809-4058	189	7
96906	MS28775-111		219	8
			219	34
96906	MS3367-1-9	5975-00-074-2072	197	26
96906	MS3367-5-0	5975-00-133-8687	43	26
			78	13
96906	MS3451W24-10S	5935-01-130-5359	91	13
96906	MS35206-244	5305-00-984-6192	84	7
			86	4
96906	MS35307-359	5305-00-717-5460	178	27
11083	MS3533-74		208	68
96906	MS35333-135	5310-01-078-2992	208	53
96906	MS35335-32	5310-00-596-7691	75	21
			77	15
			192	6
			0172	10
96906	MS35335-33	5310-00-209-0786	210	4
			211	4
			212	4
96906	MS35335-34	5310-00-514-6674	94	18
96906	MS35335-37	5310-00-209-5116	94	1
96906	MS35335-65	5310-00-655-6151	207	41
96906	MS35338-42	5310-00-045-3299	84	3
			92	50
96906	MS35338-45	5310-00-407-9566	42	46
			43	14
			45	11
			50	3
			65	42
			79	11
			82	5
			85	8
			88	13
			88	15
			91	9
			96	18
			97	6
			100	2
			107	30
			108	16
			108	28
			110	36
			113	7
			118	14
			127	8
			130	19
			133	3
			134	3
			135	2
			136	2
			137	2

CROSS-REFERENCE INDEXES

PART NUMBER INDEX

CAGEC	PART NUMBER	STOCK NUMBER	FIG.	ITEM
96906	MS35338-45	5310-00-407-9566	137	14
			138	14
			139	20
			143	14
			145	6
			146	29
			156	10
			164	7
			171	1
			172	73
			188	13
			190	5
			191	10
			194	4
			221	48
			222	37
96906	MS35338-48	5310-00-584-5272	95	25
			97	21
			100	21
			107	13
			108	6
			108	22
			128	34
			142	16
			151	44
			155	8
			157	18
			158	21
			171	3
			206	13
			221	51
96906	MS35338-51	5310-00-584-7888	108	59
			168	33
96906	MS35338-53	5310-00-584-7889	169	4
96906	MS35340&50	5310-00-045-5001	87	27
			107	26
			159	3
			201	36
96906	MS35489-1C6		85	6
96906	MS35690-424	5310-00-660-2649	47	56
			84	4
			84	6
			181	4
			183	4
96906	MS35691-13	5310-00-853-9335	92	46
96906	MS35691-17	5310-00-851-2682	132	31
			184	4
96906	MS35691-21	5310-00-975-2075	71	4
			132	5
96906	MS35691-74	5310-00-891-3427	210	14
			211	15

CROSS-REFERENCE INDEXES

PART NUMBER INDEX

CAGEC	PART NUMBER	STOCK NUMBER	FIG.	ITEM
96906	MS35691-74	5310-00-891-3427	212	14
96906	MS35692-105	5310-00-842-7616	208	39
			209	18
96906	MS35751-15	5306-00-702-6344	179	42
96906	MS35756-10	5315-00-616-5524	132	19
96906	MS35756-9	5315-00-616-5525	9	4
			15	7
			15	15
96906	MS35842-12	4730-00-908-3193	54	2
96906	MS51021-60	5305-00-809-9385	208	51
96906	MS51117-1		161	11
96906	MS51500A8-8	4730-00-809-9427	43	13
			56	33
96906	MS51504A6-6	4730-00-835-3003	67	2
96906	MS51504A8	4730-00-555-1764	43	20
			56	28
96906	MS51504A8-8	4730-00-273-6686	213	8
96906	MS51521A12	4730-00-133-3196	203	33
96906	MS51525-A6	4730-00-491-9576	34	27
96906	MS51525A12	4730-00-710-5571	206	29
96906	MS51525A6	4730-00-491-9576	111	17
			117	24
			131	46
			146	26
			202	37
96906	MS51525A6-8	4730-00-080-7040	205	20
96906	MS51525A8-10	4730-01-074-0907	143	46
96906	MS51527A6	4730-00-143-3941	117	13
			125	11
			131	21
			142	5
			146	10
96906	MS51533B8	4730-00-314-7754	130	22
			130	28
			130	31
			130	38
			143	45
96906	MS51861-34	5305-00-058-1082	188	16
96906	MS51861-39	5305-00-432-7954	146	35
96906	MS51963-67	5305-00-723-9383	207	26
96906	MS51963-68	5305-00-723-9382	192	4
			192	15
96906	MS51964-136	5305-01-184-7693	208	28
			209	28
96906	MS51965-40	5305-00-726-3087	110	4
96906	MS51967-14	5310-00-768-0318	34	19
			64	3
			66	9
			89	9
			90	11
			108	75

CROSS-REFERENCE INDEXES

PART NUMBER INDEX

CAGEC	PART NUMBER	STOCK NUMBER	FIG.	ITEM
96906	MS51967-14	5310-00-768-0318	116	12
			119	14
			142	19
			151	26
			153	24
			161	26
			205	35
			206	27
96906	MS51967-23	5310-00-763-8921	176	2
96906	MS5196714		0116	12
96906	MS51968-11	5310-00-880-7745	139	7
96906	MS51968-15	5310-00-943-2141	119	9
96906	MS51968-20	5310-00-763-8905	87	28
96906	MS51971-10	5310-00-763-8927	210	13
			211	14
			212	13
96906	MS9021-225	5330-00-527-7939	144	4
96906	MS90448-242		208	46
96906	MS9068-214	5330-00-997-7230	117	11
96906	MS90726-6	5305-00-068-0506	44	16
96906	MS90727-114	5305-00-719-5235	120	6
96906	MS90727-115	5305-00-719-5238	207	7
			208	70
			209	68
96906	MS90727-116	5305-00-719-5239	119	7
			119	30
			119	39
			120	8
96906	MS90727-118	5305-00-719-5241	119	34
96906	MS90727-175	5305-00-726-2562	6	10
			7	9
96906	MS90727-6	5306-00-068-0513	29	2
			207	67
			208	5
			209	76
96906	MS90728-1	5305-00-071-2508	210	5
			211	5
			212	5
96906	MS90728-113	5305-00-071-2069	2	21
			68	11
			89	7
			97	22
			98	2
			107	12
			117	17
			119	23
			151	9
			155	16
			157	25
			162	20
			172	45

CROSS-REFERENCE INDEXES

PART NUMBER INDEX

CAGEC	PART NUMBER	STOCK NUMBER	FIG.	ITEM
96906	MS90728-113	5305-00-071-2069	178	3
			206	9
			221	81
96906	MS90728-120	5305-00-071-2076	112	10
			206	48
96906	MS90728-127	5305-00-071-2083	149	15
96906	MS90728-163	5305-00-724-7221	2	4
			2	13
			7	24
			68	1
			68	12
			107	25
			148	5
			195	22
			206	4
96906	MS90728-164	5305-00-724-7222	2	18
			60	12
			124	24
			220	9
			221	17
96906	MS90728-169	5305-00-724-7236	124	27
96906	MS90728-3	5305-00-071-2506	81	13
			207	13
96906	MS90728-32	5306-00-226-4825	27	5
			32	17
			53	13
			92	18
			161	24
			172	61
96906	MS90728-33	5306-00-226-4826	15	1
			47	42
			50	19
			58	2
			98	20
			103	13
96906	MS90728-34	5306-00-226-4827	29	27
			64	18
			88	1
			139	21
			197	17
96906	MS90728-36	5306-00-226-4829	60	8
96906	MS90728-39	5306-00-226-4832	25	13
			47	51
96906	MS90728-40	5306-00-226-4833	33	6
96906	MS90728-45	5306-00-226-4838	204	13
96906	MS90728-5	5305-00-068-7837	44	12
			46	11
			81	23
			90	33
			92	63
			132	13

CROSS-REFERENCE INDEXES

PART NUMBER INDEX

CAGEC	PART NUMBER	STOCK NUMBER	FIG.	ITEM
96906	MS90728-5	5305-00-068-7837	161	32
			162	5
			163	36
			164	1
			167	14
			189	3
			190	17
			190	20
			191	4
96906	MS90728-63	5305-00-688-2111	17	30
			38	21
			39	23
			43	15
			59	30
			130	77
			131	33
			136	26
			152	12
			186	21
			217	5
			0009	9
96906	MS90728-64	5305-00-725-2317	136	12
96906	MS90728-7	5305-00-071-2505	46	13
			49	2
			163	40
96906	MS90728-75	5305-00-781-3929	7	6
			59	22
96906	MS90728-78	5305-00-964-0503	68	20
			105	30
96906	MS90728-8	5305-00-225-3843	68	14
			171	11
			207	51
96906	MS90728-89	5305-00-071-2055	19	21
			65	1
			95	14
			117	3
			131	41
98625	MV86144-T-C-2757		221	31
61208	M2012130		139	13
81349	M22759/11-16-0	6145-00-600-6052	73	12
			81	16
			81	20
			172	31
			187	6
74400	M2875	6220-00-953-4652	83	1
			87	19
81349	M83248-2-908	5330-00-167-5173	16	10
			29	32
			72	2
			130	33
			131	36

CROSS-REFERENCE INDEXES

PART NUMBER INDEX

CAGEC	PART NUMBER	STOCK NUMBER	FIG.	ITEM
81349	M83248-2-908	5330-00-167-5173	136	31
			137	32
			139	14
			151	11
			157	14
			158	9
			205	17
81349	M83248/2-110	5330-00-166-1098	136	44
			157	21
81349	M83248/2-216	5330-00-166-1110	136	27
			155	11
81349	M83248/2-218	5330-01-106-7288	65	5
81349	M83248/2-227	5330-01-106-0940	157	30
81349	M83248/2-905	5330-00-165-1980	33	25
			111	33
			143	4
			156	2
			158	12
81349	M83248/2-910	5330-00-167-5174	3	26
			25	36
			41	14
			43	6
			73	19
			92	33
			136	11
			143	47
			197	6
			203	7
			205	4
81349	M83248/2-914	5330-01-088-6106	44	33
			131	47
			156	6
81349	M83248/2-932	5330-01-088-6871	117	29
81349	M832482908		0134	17
72800	NAN68	5365-01-155-5308	103	40
80205	NAS1408A4	5310-00-849-7021	179	44
80205	NAS1676-6	5310-00-088-4075	180	31
80205	NAS561P8-10	5315-00-281-9478	44	32
99066	NT721017	2540-01-062-7132	181	18
			183	23
01843	NT721021	5310-01-043-6821	181	20
			183	22
79136	N5000-77	5365-00-330-5530	111	3
18265	PCH00-1184	2940-01-304-7134	37	2
20308	PH-23	5945-01-184-4079	92	59
77122	PS25C085-PG	5310-01-160-2038	178	12
77122	PS500016-PG	5310-01-187-6105	179	4
			179	22
18265	P12-0388	5330-01-107-5181	37	14
18265	P12-0391		37	13
70485	P60		138	12

CROSS-REFERENCE INDEXES

PART NUMBER INDEX

CAGEC	PART NUMBER	STOCK NUMBER	FIG.	ITEM
60380	Q-8310	3110-01-010-9779	47	18
17627	QAS-1TC		53	1
53203	QS5-20T		53	15
59730	RB-2207	5940-01-043-6687	78	1
			92	22
71785	R0622-99		11	8
71785	R0623-99		11	7
80756	RRN775		201	44
80756	RRT-187	5365-00-285-6726	146	8
80756	RRT-393	5365-01-095-8663	196	16
80756	RRT-450	5365-00-923-4413	126	25
80756	RRT393	5365-01-095-8663	105	34
80756	RR112CD	5365-00-935-5995	110	15
80756	RR75		96	8
80756	RST-143	5365-00-282-5584	47	15
80756	RST400		106	46
53477	S-3268		133	7
75472	SA-L2		205	7
81343	SAE100R7-6	4720-01-018-6551	202	14
			202	27
			202	40
56854	SA2450	2540-01-159-2975	177	6
56854	SA2461-000E		178	40
78500	SE-RUR21-1	5330-01-097-8235	119	41
99066	SH7212C3A		183	15
30780	SK10-2275-1JG		53	7
91561	SM-900 ORB		204	15
01843	SP7211	5340-00-119-2065	181	13
61864	SS-48165	5340-00-702-8534	191	14
61864	SS-51156	5340-00-835-6504	189	11
61864	SS51142	5340-00-291-0372	163	29
80254	STD1640		190	8
11083	SC163		79	3
11083	S1347	5306-00-402-9168	50	20
78286	S14-35-5017	5310-00-285-8867	64	14
11083	S1566	5306-00-275-5012	2	34
			42	6
			63	1
			220	4
11083	S1573	5306-00-426-2922	2	29
			131	13
			206	38
11083	S1576	5306-00-263-7304	199	46
11083	S1577	5306-00-260-4502	201	35
			208	66
			209	71
11083	S1587	5306-00-263-8978	16	1
			55	4
			62	3
			68	7
			95	19

CROSS-REFERENCE INDEXES

PART NUMBER INDEX

CAGEC	PART NUMBER	STOCK NUMBER	FIG.	ITEM
11083	S1587	5306-00-263-8978	100	20
			117	41
			138	22
			147	3
			151	4
			152	22
			155	7
			161	1
			162	23
			165	2
			168	37
			205	30
			206	11
			207	4
			208	76
			209	12
			221	50
11083	S1588	5306-00-637-4956	25	39
11083	S1594	5306-00-260-4508	171	2
11083	S1603	5306-00-263-7303	119	39
11083	S1607	5306-00-423-8119	108	53
11083	S1608	5306-00-814-6565	17	10
			131	5
11083	S1613		192	9
11083	S1615	5306-00-261-1153	29	23
			50	9
			94	15
			110	28
			163	3
			170	7
			171	14
			187	10
			208	7
			208	54
			209	2
			209	70
11083	S1620		207	60
11083	S1625	5305-00-426-2936	131	43
			164	12
11083	S184		199	25
11083	S1897	5306-00-261-3396	199	71
11083	S214	5306-00-426-2947	122	11
09257	S32573-123	5330-01-104-1091	111	30
			111	35
11083	S509		217	15
			271	15
15434	S658	5310-00-109-7638	146	3
			178	23
12662	S854-016		187	1
11083	T-251	5310-01-122-9066	222	26
62458	TLNF-3816-S	5310-01-114-3807	178	8

CROSS-REFERENCE INDEXES

PART NUMBER INDEX

CAGEC	PART NUMBER	STOCK NUMBER	FIG.	ITEM
62458	TLNF-3816-S	5310-01-114-3807	178	8
79534	TRJ670-S		140	5
60038	TW115	5310-00-933-5940	122	40
11083	T318	5306-00-426-2966	164	15
11083	T320	5306-00-260-4513	130	58
			217	9
11083	T642	5306-00-496-2234	44	1
			177	19
11083	T65	5306-00-426-2974	17	11
			95	7
			130	42
			135	1
11083	T768	5306-00-426-2983	90	41
91561	V120-1214		206	34
93061	V405P-6-6	4820-01-096-5062	67	1
81983	W-1060-2	2920-01-107-7533	71	1
60380	W-430-Q	3110-00-228-9337	47	45
78189	WD23875	5310-01-098-0634	81	24
			94	9
			163	4
			170	8
			171	12
			182	2
16254	WFC-2006	3040-01-203-8620	209	1
11083	WF20-2A-60		216	2
11083	WF20-4-60		216	8
51814	WHT-393	5365-01-095-8663	199	32
11083	WM20-3		216	13
16254	WM20-51		216	4
11083	WM25--9		216	16
20568	WS-13		146	34
51814	WST-10C		205	18
99066	WWC-24L620-S		181	2
99066	WWC24L804-38		183	2
79136	X5133-98MD	5365-00-664-2779	12	18
11083	CL1026	5340-00-229-9287	163	44
11083	CL1178	5306-00-423-8069	108	58
			147	28
			154	25
			199	60
11083	CL1329		209	64
11083	CL1351	5306-00-263-7301	4	11
			14	1
			15	10
			17	20
			25	43
			34	21
			53	3
			56	42
			62	5
			64	10

CROSS-REFERENCE INDEXES

PART NUMBER INDEX

CAGEC	PART NUMBER	STOCK NUMBER	FIG.	ITEM
11083	CL1351	5306-00-263-7301	65	45
			82	4
			89	3
			95	21
			97	24
			110	46
			114	17
			117	16
			118	18
			127	7
			130	11
			130	47
			132	33
			143	36
			169	28
			170	4
			186	2
			222	36
11083	CS0175	5315-00-498-4657	64	7
			132	22
			0057	57
11083	CS1571	5305-01-026-9518	15	14
			17	28
			18	11
			19	4
			21	1
			35	4
			41	1
			57	23
			68	19
			124	6
			130	49
			131	7
			133	17
			137	1
			151	67
			168	35
			171	15
			203	24
11083	CS1588	5306-00-637-4956	7	7
			16	14
			16	18
			17	17
			22	11
			34	14
			38	3
			56	19
			59	15
			61	23
			65	8
			114	9

CROSS-REFERENCE INDEXES

PART NUMBER INDEX

CAGEC	PART NUMBER	STOCK NUMBER	FIG.	ITEM
11083	CS1588	5306-00-637-4956	116	9
			129	13
			130	1
			131	4
			133	20
			134	2
			136	1
			137	13
			146	30
			152	3
			202	41
			217	8
			221	57
11083	CS1590	5306-01-094-9106	18	18
			57	5
			114	4
			132	50
			133	4
			143	40
11083	CS1591	5305-01-015-6841	5	2
			17	24
			19	2
			23	4
			28	21
			37	4
			39	24
			57	9
			60	19
			67	12
			83	9
			114	13
			116	21
			130	84
			132	21
			145	7
			167	62
			168	28
			184	8
11083	CS1594	5306-00-260-4508	4	1
			14	22
			17	1
			22	5
			23	6
			25	29
			32	10
			39	22
			41	10
			44	6
			45	24
			47	3
			53	9

CROSS-REFERENCE INDEXES

PART NUMBER INDEX

CAGEC	PART NUMBER	STOCK NUMBER	FIG.	ITEM
11083	CS1594	5306-00-260-4508	56	16
			59	19
			60	26
			89	6
			92	38
			92	62
			96	19
			100	7
			107	20
			108	29
			109	7
			110	18
			114	16
			116	23
			132	7
			136	24
			138	25
			139	1
			151	34
			162	17
			163	14
			168	23
			172	23
			172	74
			184	1
			187	16
			196	19
			203	17
			204	22
			221	47
11083	CS1595	5306-00-423-8117	39	4
			56	22
			65	53
			68	17
			98	10
			112	9
			151	27
			165	13
			167	23
			168	13
			206	47
			208	17
			209	72
11083	CS1619	5306-00-426-2932	7	5
			59	12
			113	26
			131	51
			152	8
11083	CS1621	5306-00-426-2934	126	5
			128	26
			205	23

CROSS-REFERENCE INDEXES

PART NUMBER INDEX

CAGEC	PART NUMBER	STOCK NUMBER	FIG.	ITEM
11083	0S1621	5306-00-426-2934	206	23
11083	0S1850		136	40
08129	0S3533		140	8
11083	0T0102	5305-00-721-5492	0092	12
11083	0T0573	2910-00-309-9473	61	9
16764	001481	5945-00-843-1778	92	45
84483	007-863	5307-01-115-2619	159	14
81834	01-6103-85	6220-01-150-4033	86	3
21335	010-11515		202	2
44655	0200R		180	7
11083	038747		42	31
12195	07118800	5330-01-128-4134	140	9
16476	07350-61		77	20
11083	080145		203	22
			203	26
09367	0917673-6		6	7
6N299	0920416	4730-00-460-6725	3	10
			5	16
94364	1-2827		192	3
94364	1-3059		192	14
83355	1-4INNVYLKWASH		44	11
			69	52
			110	20
			132	14
			162	2
			164	17
			187	9
			191	3
			192	8
11083	1A1460	5306-00-273-6357	55	7
			61	8
			68	10
			95	10
			117	35
			147	29
			151	22
			153	1
			207	42
			208	65
			209	61
11083	1A2029	5306-00-423-8194	7	20
			14	11
			19	7
			25	17
			38	16
			39	29
			59	34
			65	32
			66	2
			82	21
			83	18

CROSS-REFERENCE INDEXES

PART NUMBER INDEX

CAGEC	PART NUMBER	STOCK NUMBER	FIG.	ITEM
11083	1A2029	5306-00-423-8194	97	7
			98	46
			108	1
			110	50
			113	6
			114	2
			118	13
			122	35
			137	27
			138	13
			167	60
			221	66
11083	1A2209	5306-00-063-5001	202	42
11083	1A2223	5315-00-252-2961	100	11
			108	62
11083	1A2935	5305-00-352-7287	12	10
11083	1A3382		163	37
11083	1A458	5306-00-245-0953	201	13
11083	1A5183	5306-00-637-4927	5	6
			113	25
11083	1A5822	5306-00-426-3080	126	27
			207	53
58312	1A5964-00	5305-00-426-3085	7	4
11083	1A7458	5340-01-098-6669	108	2
11083	1A7669		147	16
			151	23
11083	1A8063	5306-00-426-3139	2	30
			154	18
11083	1A8096	5360-00-249-3471	156	3
11083	1A8285	5310-00-423-8288	222	13
11083	1A8537	5306-00-426-3150	128	29
			169	21
			220	1
11083	1A8651	5306-00-423-8292	108	12
11083	1A9579	5306-00-930-5643	41	7
			202	11
			208	31
			209	59
11083	1B0676	5315-00-272-6760	132	1
11083	1B2713	5306-00-423-8313	208	34
11083	1B2714	5306-00-426-3189	47	53
11083	1B2790	5306-00-272-1804	34	6
			36	2
11083	1B2886	5306-00-423-8316	131	14
			153	7
			155	9
11083	1B3057	5340-00-423-8320	23	11
			116	19
			130	15
11083	1B3867	3110-00-144-8542	60	5
11083	1B4203	5310-00-725-7382	202	45

CROSS-REFERENCE INDEXES

PART NUMBER INDEX

CAGEC	PART NUMBER	STOCK NUMBER	FIG.	ITEM
11083	1B4333	5310-00-930-7454	166	8
11083	1B4367	5306-00-426-3209	108	14
			169	12
11083	1B4430	5310-00-843-4593	132	26
			207	6
			208	71
			209	65
			0090	37
11083	1B4442	5310-00-221-4696	132	12
11083	1B5174	4730-00-122-3969	5	20
			17	15
11083	1B5354	5310-01-053-4509	28	5
			28	33
11083	1B5355	5310-00-498-8409	37	10
			39	18
11083	1B5357	5310-00-828-7334	55	3
			55	5
11083	1B581	5306-00-814-8988	45	16
11083	1B7904	2920-00-423-8362	110	32
			127	12
			222	32
11083	1B8074		222	11
11083	1C2251	5306-00-423-8393	184	6
11083	1D3419	5305-01-102-7343	122	28
11083	1D4533	5306-01-106-8225	208	12
			209	5
11083	1D4556	5306-00-698-2177	131	39
11083	1D4566	5306-00-426-3397	25	22
			66	3
			108	21
			119	17
			151	55
			167	3
			207	38
			207	55
			208	62
			209	40
11083	1D4569	5306-00-272-4229	117	26
			126	2
11083	1D4572	5305-00-411-0777	34	17
11083	1D4588	5305-00-419-3410	169	16
11083	1D4593	5306-00-426-3400	202	1
11083	1D4599	5305-01-062-9897	202	12
11083	1D4608	5306-00-426-3402	154	24
			168	6
11083	1D4610	5306-00-426-3404	122	41
			201	16
11083	1D4627	5306-00-732-7714	133	13
11083	1D4642	5305-00-494-1906	170	15
11083	1D4646	5305-01-105-1804	124	2
11083	1D4717		207	63

CROSS-REFERENCE INDEXES

PART NUMBER INDEX

CAGEC	PART NUMBER	STOCK NUMBER	FIG.	ITEM
11083	1D4718	5310-00-431-7237	172	39
11083	1D5117	5310-00-208-9476	143	16
11083	1D5118	5310-00-208-9485	68	5
11083	1D5121	5310-00-005-0699	145	24
11083	1D6306	5310-01-102-7963	166	3
11083	1F9233	5310-00-262-4789	5	18
			12	2
11083	1H0337	4810-01-066-5266	136	18
11083	1H1023	5330-00-920-6924	28	29
			144	23
11083	1H3244		75	38
			77	32
			79	4
			92	64
			183	17
11083	1H3338	5310-01-062-9899	84	5
			94	5
			110	30
			127	10
			181	9
			183	9
			222	34
11083	1H8278	5330-00-599-2183	139	16
11083	1H8306	2910-00-862-6825	42	25
11083	1H8720	5330-00-555-3807	42	29
			221	88
11083	1H9696	5330-00-580-1226	110	52
			221	52
11083	1H974	5315-00-828-9781	113	13
11083	1J2989	5305-01-131-2921	121	4
11083	1J4384	5315-00-619-2962	138	27
11083	1J5353	5315-01-098-3928	103	2
11083	1J8497	4820-00-923-7042	136	9
			157	7
11083	1J8945	4820-01-090-2178	155	3
11083	1J8965	5310-01-108-7538	66	8
11083	1J9533	5360-00-851-6804	155	4
11083	1J9693	4730-00-924-7129	134	14
11083	1K1122		205	33
11083	1K4649		222	10
11083	1K6870	5310-00-269-6340	165	9
11083	1K6932		166	2
11083	1K6978	5306-00-409-3684	102	9
11083	1K7627		166	9
11083	1L3769	2910-01-051-2299	51	7
29944	1MM-47200		177	15
11083	1M1341	5340-01-053-3843	132	58
11083	1M3151	5315-01-098-6458	98	30
11083	1M3506	5365-00-074-3608	30	18
58312	1M3833-00	5315-00-409-3703	44	29
11083	1M3937	5330-00-948-6632	97	17

CROSS-REFERENCE INDEXES

PART NUMBER INDEX

CAGEC	PART NUMBER	STOCK NUMBER	FIG.	ITEM
11083	1M5898	6240-00-643-0687	83	2
			87	18
			87	24
11083	1M5928	6240-00-727-8573	87	6
			87	12
11083	1M6119	5306-00-438-8600	90	3
11083	1M6120	5310-00-438-8604	90	1
11083	1M644	5305-00-253-7630	18	13
11083	1M9015	5330-00-081-9702	200	7
50948	1N5998	5365-01-113-0709	151	13
			153	4
			153	10
11083	1N6002	5330-01-097-6618	151	14
			153	5
			153	11
11083	1N7284	5306-01-102-7319	131	23
11083	1N9770	5925-01-048-2643	189	17
11083	1P0014		106	8
11083	1P0043		204	6
			204	18
11083	1P0044		204	5
			204	17
11083	1P0232	2910-01-066-7693	31	10
11083	1P0436	5330-01-024-4862	34	9
			36	6
11083	1P1219		19	12
			19	19
11083	1P1367	5340-00-495-9648	17	6
11083	1P234	5315-00-438-7015	31	9
11083	1P2694		122	24
11083	1P2695		122	25
11083	1P3321	5315-01-099-0060	145	17
11083	1P3700	5330-01-097-6624	133	19
11083	1P3703	5330-01-043-5565	65	40
			130	67
			131	8
11083	1P3704	2520-01-052-3917	130	50
			131	37
11083	1P3705	5330-01-060-0308	95	8
			151	32
11083	1P3707	5330-01-053-2691	151	38
			153	2
			206	12
11083	1P3708	5330-01-107-4646	206	37
11083	1P3709	5330-01-097-6623	117	25
			153	6
11083	1P3934	3110-01-053-7564	199	14
11083	1P3935	3110-01-037-7207	199	13
11083	1P3956	4710-01-063-0673	186	8
11083	1P3958	3110-01-097-9505	104	27
11083	1P4078		108	38

CROSS-REFERENCE INDEXES

PART NUMBER INDEX

CAGEC	PART NUMBER	STOCK NUMBER	FIG.	ITEM
11083	1P4079	3110-01-099-0108	108	45
11083	1P4082	2520-01-102-3718	108	19
11083	1P4085		126	19
11083	1P44578		95	13
11083	1P4576	4730-01-051-3134	130	9
			136	25
11083	1P4577	4730-01-051-5256	65	6
			130	3
			131	34
			136	33
			137	26
			152	11
11083	1P4578	4730-01-051-5257	19	9
			65	3
			117	1
			117	9
			130	45
			152	27
11083	1P4579	5340-01-060-0309	95	18
			117	42
			151	30
			155	15
			157	23
			206	72
11083	1P4582	3805-01-053-2692	151	1
			152	21
11083	1P5304		189	16
11083	1P5411	5365-01-129-5895	66	5
11083	1P5412	5365-01-129-5894	66	6
11083	1P5762		95	9
			151	33
11083	1P5795		65	37
58312	1P6452-00	5970-00-213-7747	49	5
11083	1P6500	5330-01-062-7128	194	16
			207	61
11083	1P6909	5340-00-519-7036	28	7
11083	1P7009		217	6
11083	1P7346	5310-01-051-2300	15	13
11083	1P7521		97	8
11083	1P7522		107	2
11083	1P7834	3110-01-065-7169	108	42
11083	1P7835	3110-01-066-5287	108	43
11083	1P8016	5340-01-105-2272	153	22
11083	1P8116	5330-01-066-0673	103	8
11083	1P8482	2940-01-072-9416	37	16
11083	1P9261	2520-01-067-5621	106	45
11083	1P9390	5330-01-102-3527	37	20
11083	1P9593	3110-01-060-3730	128	4
11083	1P9594	3110-01-060-3731	128	5
11083	1P9600	5330-01-059-7141	115	3
11083	1P9919	4730-01-095-0834	125	7

CROSS-REFERENCE INDEXES

PART NUMBER INDEX

CAGEC	PART NUMBER	STOCK NUMBER	FIG.	ITEM
11083	1P9919	4730-01-095-0834	146	18
11083	1P9946		61	5
11083	1P9958	2990-01-070-8548	49	10
11083	1S0004	5330-00-613-6499	28	22
11083	1S0286	5307-01-066-0525	56	15
11083	1S1015	5340-00-426-4819	92	11
			143	31
11083	1S1770	5310-00-070-6870	40	9
11083	1S1790	5360-01-097-9196	194	7
11083	1S1888	2510-01-196-1284	83	22
11083	1S4295	5330-00-924-0048	40	2
11083	1S4698	4310-01-063-0729	68	4
11083	1S4810	5330-00-989-3295	41	4
11083	1S57	2520-00-532-0762	126	18
11083	1S6595	5330-00-931-8048	41	2
11083	1S668	5330-00-953-1624	150	8
11083	1S724	2920-01-059-0864	190	14
11083	1S7336		46	6
58312	1S7336-00		46	10
11083	1S7984	3120-00-470-5878	46	3
11083	1S8687	5365-01-050-8010	64	19
11083	1S9209	2990-01-050-8011	61	6
11083	1S9989	5315-00-431-8915	106	21
11083	1T0765	5306-01-097-7874	110	51
11083	1T0766	3120-00-973-8651	98	18
11083	1T0786		98	9
11083	1T0806		98	7
11083	1T414	5306-00-455-0467	98	34
11083	1T720	5306-01-103-7039	25	7
			138	10
11083	1T822	5306-00-452-1354	37	18
11083	1V0383		121	14
			124	36
11083	1V1122		186	9
11083	1V1123		186	6
11083	1V1494	5365-01-069-1441	82	23
11083	1V2708		42	9
			220	8
11083	1V2709		42	38
11083	1V2751	2910-01-154-6878	42	28
			221	37
11083	1V2830		131	9
11083	1V2832		131	49
11083	1V2836	5930-01-111-7673	0045	45
11083	1V2951		220	2
11083	1V3876		206	67
11083	1V3878		206	66
11083	1V4709		145	11
11083	1V4865		75	1
11083	1V4868		175	1
11083	1V4891		180	1

CROSS-REFERENCE INDEXES

PART NUMBER INDEX

CAGEC	PART NUMBER	STOCK NUMBER	FIG.	ITEM
11083	1V4901		170	1
11083	1V4975		128	2
11083	1V4976		128	17
11083	1V5250		162	21
11083	1V5251		162	11
11083	1V5257		162	7
11083	1V5324		110	11
11083	1V5326	3120-01-159-1169	110	10
			110	57
11083	1V5439		129	15
11083	1V5606		146	33
11083	1V5655		145	22
11083	1V5669		128	1
11083	1V5770		145	20
11083	1V5772	5315-01-099-7351	145	26
11083	1V5774		127	6
11083	1V5775		145	2
11083	1V5776		145	19
11083	1V5804		128	15
11083	1V5807		121	7
11083	1V6274	9905-01-109-4261	142	22
			146	23
11083	1V6275	9905-01-104-6446	142	12
			146	22
11083	1V6276	9905-01-105-4111	142	17
			146	25
11083	1V6277	9905-01-104-6445	143	37
			146	14
11083	1V6336		121	5
11083	1V6337		124	13
11083	1V6342	3020-01-151-3963	110	9
11083	1V6343		110	54
11083	1V6346		110	3
11083	1V6347		110	13
11083	1V6348		110	8
11083	1V6349		146	31
11083	1V6544		2	16
11083	1V6545		2	7
11083	1V6546		2	3
11083	1V6547		2	12
11083	1V6565		39	7
11083	1V6566		39	6
11083	1V6683		129	4
11083	1V6754		164	4
11083	1V6755		0164	18
		5340-01-203-2587	0167	52
11083	1V7205		162	8
		5340-01-164-6470	164	5
			167	11
11083	1V7206		170	2
11083	1V7287		116	7

CROSS-REFERENCE INDEXES

PART NUMBER INDEX

CAGEC	PART NUMBER	STOCK NUMBER	FIG.	ITEM
11083	1V7323		145	10
11083	1V7362	5930-01-118-6366	75	23
11083	1V7383		75	9
11083	1V7403		129	10
11083	1V7439	4710-01-243-0092	139	8
11083	1V7440		139	22
11083	1V7443		139	4
11083	1V7444		139	5
11083	1V7746		170	3
11083	1V7749	5365-01-098-1173	170	10
11083	1V7750	5365-01-098-1174	170	16
11083	1V7753	5365-01-129-0960	171	5
11083	1V7801	5365-01-128-4302	171	18
11083	1V7885		122	26
11083	1V7940		159	6
11083	1V7943		159	5
11083	1V7944		143	29
11083	1V8074		130	24
11083	1V8111	2590-01-301-0256	75	5
11083	1V8113		151	17
11083	1V8223		222	12
11083	1V8574		122	31
11083	1V8976		142	21
11083	1V9093		169	14
11083	1V9123		114	14
11083	1V9259		153	14
11083	1V9373	5340-01-156-5479	42	40
			221	43
11083	1V9375	2590-01-222-8738	42	1
11083	1V9385		146	4
11083	1V9414		151	31
11083	1V9415		151	37
11083	1V9465		167	51
11083	1V9491		170	14
11083	1V9492		170	19
11083	1V9494		164	13
11083	1V9607		79	13
11083	1V9626		44	31
11083	1V9645		138	1
11083	1V9692		206	44
11083	1V9740		44	25
11083	1V9741		206	41
11083	1V9747		130	76
11083	1V9750		162	18
11083	1V9770		167	9
11083	1V9771		167	26
11083	1V9772		167	24
11083	1V9773		167	15
11083	1V9808		42	18
11083	1V9809	5340-01-097-9615	110	14
11083	1V9813		138	8

CROSS-REFERENCE INDEXES

PART NUMBER INDEX

CAGEC	PART NUMBER	STOCK NUMBER	FIG.	ITEM
11083	1W3900	5330-01-155-4283	146	27
11083	1W5252	3120-01-185-0628	6	1
11083	1W5283	2815-00-409-3899	5	31
11083	1W6280	2815-01-179-3109	3	7
66295	10H	4730-01-062-7150	186	7
			202	51
70281	1000L066		172	56
54364	100056-8		189	4
70281	1005L008		172	48
85105	101-015-231		160	1
10180	101-015-502	5307-01-135-7339	159	15
10180	101-017-182		199	29
85105	101-017-186	5307-01-011-3163	202	6
34855	10118820	5315-00-234-1627	42	21
70281	1015807		172	43
70281	1015808		174	13
70281	1015811		174	19
70281	1015817		172	75
70281	1015819		172	41
70281	1015821		172	42
70281	1015822		172	46
70281	1015823		172	54
70281	1016393		174	17
70281	1016402		174	2
70281	1016409		174	12
70281	1016411		174	6
70281	1016460		172	18
70281	1016462		172	21
70281	1016463		172	52
70281	1016464		172	53
70281	1016468		172	7
70281	1016469		172	16
70281	1016486		172	79
70281	1016487		172	19
70281	1016488		172	17
70281	1016489		172	8
70281	1016490		172	76
70281	1016491		172	25
70281	1016507		172	49
70281	1016646		172	71
70281	1016747		172	38
70281	1016785		172	51
70281	1017557		172	77
70281	1017559		172	24
70281	1017643		172	22
79470	102-10102		53	12
79470	102-15102		53	11
16294	10223		216	17
11083	102570	5305-01-122-5468	110	6
11083	102571	5305-01-104-1051	110	5
70281	1026L003		172	50

CROSS-REFERENCE INDEXES

PART NUMBER INDEX

CAGEC	PART NUMBER	STOCK NUMBER	FIG.	ITEM
52555	10269-1		211	8
16294	10270		216	15
7947C	1C3-20084		34	23
16294	10307		216	3
11083	10309		216	14
24617	103092	5310-00-010-3092	69	13
			75	14
			92	49
			92	52
62983	1050	5305-00-118-6470	218	23
16294	10500		216	18
16294	10815-114		216	5
16294	10815-214		216	11
16294	10815-224		216	9
16294	10815-326		216	7
16294	10822-214		216	10
			216	12
16294	10824-326		216	6
15434	108330	5310-00-486-2505	203	31
19207	10535241	5307-00-067-4895	39	9
			55	9
19207	10551182	4730-00-203-2866	221	60
80657	11BA011636		9	3
			12	8
			61	4
			64	25
11083	11C-03536		32	11
11671	11089		148	3
11671	11146	5310-00-332-5036	148	41
			149	14
11671	11147	5310-01-068-2238	148	8
16764	1115563	5945-00-445-0865	70	2
16764	1117248	2920-00-231-7270	68	9
11671	11650		148	13
11671	11669	3120-00-338-5897	148	39
			148	43
28275	116747288	5935-01-097-9974	90	23
11671	11688-4	5307-01-114-1318	148	9
59066	11694-20-M027WC		181	1
79550	11722	5935-01-097-7240	82	16
			180	6
			187	7
19207	117244	4730-00-042-8988	3	24
79550	11851	5940-01-121-0365	93	20
79550	11856	5940-01-188-0009	91	3
			92	7
			92	24
			93	12
			172	2
			181	7
30780	12-16F5XS		203	32

CROSS-REFERENCE INDEXES

PART NUMBER INDEX

CAGEC	PART NUMBER	STOCK NUMBER	FIG.	ITEM
30780	12HP5N		129	12
			140	14
10CC1	122329PC93	4730-00-555-8291	218	31
10CC1	1226126-6	4730-00-202-8099	117	52
			142	4
78189	1206-00	5310-00-187-7070	75	7
			77	9
24617	120613	5310-00-297-8836	110	19
			127	4
			222	16
79550	12167		221	41
62983	1250	5305-01-045-2775	218	30
11671	12717		148	12
			148	28
11671	12875	5310-01-113-1310	195	13
71791	128930-1	5310-00-595-6318	156	11
11671	12989		195	16
14351	13XX3958	5306-00-685-2384	143	13
11671	13048		148	26
79470	131-01003		185	15
97403	13216E6191-3	5940-00-432-2660	76	10
11671	13415		149	2
			149	21
70412	13440		180	14
15564	1377A	5310-00-251-0088	14	8
			19	6
			21	4
			22	2
			34	16
			37	5
			41	12
			42	43
			45	13
			54	3
			57	14
			60	27
			61	12
			65	29
			67	14
			77	16
			82	9
			83	7
			89	4
			90	8
			91	16
			92	13
			94	4
			100	1
			114	8
			116	4
			117	14

CROSS-REFERENCE INDEXES

PART NUMBER INDEX

CAGEC	PART NUMBER	STOCK NUMBER	FIG.	ITEM
15564	1377A	5310-00-251-0088	130	16
			132	42
			143	32
			152	19
			167	18
			168	27
			172	26
			190	4
			191	9
			199	27
			202	21
			204	24
			217	14
24617	137946	5315-00-187-9538	222	17
11671	13807		195	12
11671	13887	4320-01-101-8685	KIT	
71741	14-11		187	17
11671	14021		149	4
11671	14022		149	6
11671	14023		149	5
11671	14145		148	2
11671	14317	5365-01-085-3125	144	5
96151	14380	5305-01-097-8184	144	24
27783	1449-T	2640-00-537-2251	140	6
24617	145036	5310-00-045-1079	146	1
			207	10
			208	57
			209	37
95879	1452	4730-00-420-9017	208	43
62983	1454	5310-00-732-0558	219	3
62983	1458		218	4
11671	14663-1	5330-01-136-4548	KIT	
96151	15	5315-00-129-6499	144	11
71741	15-35		188	15
11083	15P2937		34	10
01276	1525-4-22	4720-00-847-1710	200	16
62983	154012	5330-00-551-0471	219	36
62983	154018	5330-00-599-6573	218	17
62983	154129		219	38
		5330-00-948-6482	219	38
11671	15587		148	14
		4820-01-158-6861	195	17
55355	1577AL	2520-00-113-5509	100	6
79550	15784	5365-01-107-3893	74	11
95879	1610-BL		154	21
95879	1613B	4730-00-172-0034	196	18
79550	16274	5935-01-097-7247	80	7
			93	22
95879	1641-B		119	8
			119	35
			119	42

CROSS-REFERENCE INDEXES

PART NUMBER INDEX

CAGEC	PART NUMBER	STOCK NUMBER	FIG.	ITEM
62983	1656	3110-00-899-4353	219	6
95879	16648	4730-00-244-6517	201	37
11083	16842		56	30
11083	17014	5310-01-024-3112	143	3
73680	17159-1109	5330-01-113-1328	154	3
57711	1720-253		65	18
33525	1726-0608	5305-01-021-1508	180	32
06970	173-MTT-2-56	2590-01-199-6746	222	14
06970	173L-TT1-54	2590-01-298-2313	222	15
79550	17510	5935-01-097-7239	85	4
			91	2
			91	11
			172	3
			172	30
96151	18001	3110-01-100-9048	144	20
16764	1851632	2920-00-100-3403	70	48
16764	1852726	2920-01-053-4541	69	45
24617	1860435		78	5
16764	1861791	5310-00-292-2188	70	46
62983	186580	5365-00-674-6831	219	37
16764	1869747		70	25
77060	1869794	3120-01-160-7617	78	7
62983	187000		219	28
90412	18742		182	7
16764	1876813	5340-01-167-4216	69	17
03956	1877528	5330-00-892-2503	218	7
70412	18782	2540-01-112-0525	180	13
66503	188668	5305-01-096-6938	180	27
16764	1892960	6150-01-195-8726	69	16
16764	1894642	5330-01-053-7021	70	15
16764	1894643	5330-01-053-2907	70	14
82465	19089	5310-01-119-1442	177	5
16764	1911644	5310-00-297-7319	70	38
16764	1914869	5306-00-550-9129	70	18
			70	52
16764	1914873		70	24
79550	19188A	5935-01-120-3853	81	27
			85	5
			92	6
79550	19188B	5935-01-119-1467	93	16
79550	19189C	5935-01-118-8884	76	3
			91	4
			91	12
			92	23
79550	19189D	5935-01-256-0170	91	6
			93	14
79550	19191	5935-01-255-8020	42	4
			88	8
			91	5
			92	20
			93	21

CROSS-REFERENCE INDEXES

PART NUMBER INDEX

CAGEC	PART NUMBER	STOCK NUMBER	FIG.	ITEM
79550	19192	6150-01-299-4514	92	29
79550	19193	5935-01-118-8885	93	18
16764	1922457	5310-00-719-5470	70	29
16764	1930611	5306-00-550-3023	70	3
16764	1933111	5330-00-869-3369	70	16
16764	1936466	2920-00-999-2527	70	22
16764	1945356		70	17
16764	1945476	5330-00-976-4695	70	39
16764	1945484	6110-00-757-7187	70	12
16764	1945840	2920-00-838-9344	70	37
16764	1945848	2920-01-138-7046	70	47
16764	1945853	2920-00-993-4233	70	23
16764	1945860	5330-01-024-9686	70	21
62983	194843		218	12
16764	1948519	5310-00-062-2051	70	5
16764	1948520	5310-00-822-2236	70	7
16764	1948521	5360-00-812-0196	70	8
16764	1948522		70	4
16764	1948526	5310-00-822-2241	70	9
16764	1948529		70	13
16764	1948536	5306-00-783-5183	70	42
16764	1948537	5306-00-783-5188	70	43
16764	1950561	5940-00-999-2534	70	27
16764	1953237	5310-00-827-2821	70	45
16764	1953238	5935-00-401-7527	70	32
16764	1955989		70	34
16764	1957846	2920-01-138-7045	70	41
16764	1959389	5970-00-403-5912	69	30
16764	1961570	5305-00-090-4274	69	12
16764	1964294	5305-00-758-8117	70	26
16764	1964857	5330-00-914-0703	70	36
16764	1965472	5970-00-657-8133	70	28
11674	1968885		69	47
16764	1968890	2920-01-053-4782	69	41
16764	1968891	2920-01-053-4743	69	40
11674	1968900		69	24
11674	1968901		69	23
16764	1968904	2920-00-231-7385	69	35
16764	1968930	5970-00-001-9382	69	28
16764	1968988	2920-00-484-2799	69	8
16764	1968990	3120-00-432-8120	69	18
16764	1968996	5325-00-031-3336	69	15
16764	1969000	2920-01-053-4744	69	6
16764	1969001	2920-01-053-4745	69	1
16764	1969002	5307-00-026-3776	69	26
11674	1969133		69	21
16764	1969481	2930-01-099-4405	69	37
11674	1969671		69	25
16764	1970395	5330-00-429-3570	69	7
11674	1970407		69	49
11674	1971465		69	22

CROSS-REFERENCE INDEXES

PART NUMBER INDEX

CAGEC	PART NUMBER	STOCK NUMBER	FIG.	ITEM
16764	1971670	2920-00-427-6421	69	29
16764	1976884	2920-01-138-7194	70	40
16764	1979451	5310-01-118-2476	70	33
16764	1979600	2590-01-140-9058	70	35
16764	1979870	2920-01-207-9671	70	20
16764	1985066	5977-01-138-7043	70	44
23382	19894	5330-00-960-9332	KIT	
11674	1990272		70	1
73992	2-H-6		202	34
73992	2-K-6		202	36
94364	2-17679		192	10
94364	2-17693		194	11
94364	2-17925	5330-01-062-7167	194	5
94364	2-17927		191	16
94364	2-17937		190	9
94364	2-17954		189	9
94364	2-17958		189	5
94364	2-17959		194	14
94364	2-17960		194	13
94364	2-18053		190	1
94364	2-18231	5365-01-185-0624	190	16
94364	2-18232	5365-01-097-9643	189	13
94364	2-18233		190	18
94364	2-1855		190	10
94364	2-18557		191	12
94364	2-18611		191	1
94364	2-18665		189	10
94364	2-19479		194	8
02697	2-256V709-90	5330-01-168-5091	195	9
76260	2A-21797-1		119	38
76260	2A-22371-1		119	29
11083	2A1396	5305-01-102-1825	132	30
11083	2A1531		129	17
			151	24
			169	7
11083	2A1538	5306-00-426-3605	2	10
			122	23
			124	20
			168	32
			201	3
11083	2A1763	5330-00-363-9866	42	17
11083	2A3798	5315-00-252-2959	109	8
11083	2A4429	2805-00-288-3650	11	1
11083	2A4639	5306-00-263-4038	22	8
			39	16
			108	39
			167	55
11083	2A5328	2815-00-423-8767	48	21
11083	2A5546	5306-00-253-3376	209	57
11083	2B0858	4730-00-010-3874	5	19
			44	37

CROSS-REFERENCE INDEXES

PART NUMBER INDEX

CAGEC	PART NUMBER	STOCK NUMBER	FIG.	ITEM
11083	2B2404	5999-00-363-6240	185	3
11083	2B8352	5310-00-507-5727	83	21
11083	2B941	5365-00-650-7092	180	24
11083	2B947	5306-00-809-7134	66	12
			108	5
			157	27
			162	15
			175	3
			206	10
			207	75
11083	2D1692	5330-01-122-2466	196	14
11083	2D1959	6240-00-019-3093	84	9
11083	2D2751	5325-00-400-8682	164	9
11083	2D6235	5310-01-160-2034	207	52
			207	68
			208	6
			208	8
			209	77
11083	2D6392	5330-00-843-7194	180	19
			182	10
11083	2D6511	3110-00-529-9205	128	22
11083	2D6533	5330-01-060-0737	122	21
			124	18
			221	70
11083	2D6642	3110-00-992-1048	12	5
11083	2D8009	5330-00-982-9312	113	19
11083	2D8363	5330-01-097-6620	106	22
11083	2D8540	5330-00-946-2871	108	18
			119	13
			122	34
11083	2D8576		32	6
11083	2D9457	3110-00-948-9790	108	9
11083	2D9860		132	23
11083	2F4159	2815-00-352-7415	47	21
11083	2F5721	3110-00-144-8519	69	46
11083	2F7306	2910-00-429-5195	173	3
11083	2F808	5305-00-151-9899	40	26
11083	2G4553	3040-01-179-6557	128	37
11083	2H1193	2930-00-633-8046	59	9
11083	2H1743	5340-01-181-0884	41	6
11083	2H2255	5315-00-893-7264	98	39
11083	2H2665	5330-00-999-5501	108	34
			119	26
			122	30
			126	9
11083	2H2995	5305-01-097-9881	103	10
11083	2H3429	5365-00-715-1152	51	9
11083	2H3738	5306-00-715-7758	81	12
11083	2H3750	5305-01-051-2302	5	17
11083	2H3786	5310-01-053-7312	169	1
11083	2H3788	5310-01-059-7159	134	19

CROSS-REFERENCE INDEXES

PART NUMBER INDEX

CAGEC	PART NUMBER	STOCK NUMBER	FIG.	ITEM
11083	2H3788	5310-01-059-7159	137	23
11083	2H3789	5310-01-061-4004	202	5
11083	2H3855	5306-00-138-4466	217	2
11083	2H3903	5305-00-082-1749	222	29
11083	2H3922	5310-00-550-3714	90	20
11083	2H3927	5330-00-886-2777	59	25
11083	2H3935	5330-00-141-5069	206	69
			221	64
11083	2H4499	2520-00-536-9675	191	19
11083	2H6338	5330-00-325-6310	206	1
			221	82
11083	2H6488	5305-01-062-6007	7	2
			142	18
			147	15
			153	12
11083	2H6489	3110-01-099-0023	108	67
11083	2H6490	3110-01-099-0021	108	66
11083	2J157	5330-00-85?-8224	47	52
11083	2J1799	5330-00-760-7344	116	17
11083	2J1826	5330-00-929-5533	137	9
11083	2J2864	5365-00-924-7128	137	31
			221	2
11083	2J3506	5310-00-978-5406	128	12
			140	15
11083	2J3507	5310-00-490-9859	121	10
			124	12
			139	19
11083	2J8466		104	4
11083	2K4096	5330-00-561-8286	133	16
			154	9
11083	2K4472	5330-00-506-1475	25	31
			108	15
10083	2K4821		209	4
			209	58
11083	2K4973	5310-01-058-8071	37	21
			161	8
			163	35
			172	62
			178	2
11083	2K5065	3110-00-100-3651	122	8
11083	2K8199	5330-00-937-5155	135	5
11083	2K8257	5330-00-855-8044	107	6
11083	2K9062	5315-01-066-9168	98	27
			121	8
			122	27
			124	14
11083	2L5271	3110-00-293-9302	60	7
11083	2L5317	5305-01-121-1646	190	7
11083	2L8051		93	3
11083	2L8054	5940-00-118-8836	74	8
11083	2L8071	5940-01-059-0873	81	21

CROSS-REFERENCE INDEXES

PART NUMBER INDEX

CAGEC	PART NUMBER	STOCK NUMBER	FIG.	ITEM
11083	2L8074	5940-00-351-8077	81	15
			81	22
			92	28
			180	3
			187	5
			0081	28
11083	2L8077	5940-01-053-4521	93	13
11083	2M1168	2520-01-059-9381	118	17
11083	2M2489	5330-00-104-6561	110	56
11083	2M2742	5340-00-241-7055	64	8
11083	2M3403	5306-00-118-3054	100	18
			106	53
11083	2M4036	5340-01-180-8836	127	3
11083	2M4314	5365-00-898-6703	29	16
11083	2M5173	5330-00-835-1189	39	27
11083	2M5795		161	19
			167	37
11083	2M6835		131	2
11083	2M7041	4730-01-068-7106	103	18
11083	2M8340	5340-01-062-5196	132	56
11083	2M849	5310-00-431-7239	2	22
			2	26
			34	18
			39	5
			61	7
			62	4
			64	4
			65	48
			66	4
			68	8
			98	3
			106	50
			119	15
			126	1
			129	16
			147	1
			159	8
			206	14
			221	87
11083	2M9189	5330-00-404-4090	16	6
11083	2N0822	5340-01-172-5535	107	32
11083	2N1287	4730-00-647-3207	25	47
			34	24
			50	5
11083	2N2765	5306-01-020-9126	39	12
11083	2N2766	5310-01-020-5126	24	6
			39	13
			40	3
11083	2N3475	5305-01-097-9389	173	15
11083	2N3478	5305-01-098-3779	172	9
11083	2N4386		47	54

CROSS-REFERENCE INDEXES

PART NUMBER INDEX

CAGEC	PART NUMBER	STOCK NUMBER	FIG.	ITEM
11083	2N5775	2815-01-051-2305	11	3
11083	2N5842	5305-01-051-2306	12	21
			12	33
11083	2N7228	5310-01-051-2307	12	17
11083	2N7229	5360-01-051-2308	12	9
11083	2N7942	5365-01-053-4523	60	6
11083	2N8109	5340-01-053-4524	22	14
11083	2N8630	5330-01-053-4829	14	3
11083	2P0268		113	4
11083	2P0768		98	12
11083	2P0988	4730-01-202-9311	206	55
11083	2P1014		113	8
11083	2P1278	4730-01-286-0225	146	28
			202	16
11083	2P1279	5310-00-186-9550	202	24
11083	2P1285		204	7
11083	2P1286		204	9
11083	2P1303		128	16
11083	2P1325	4730-01-208-2036	139	26
11083	2P1411		206	20
11083	2P1757	2930-01-050-8012	61	11
11083	2P1974	5307-01-069-1418	14	15
11083	2P2243	2930-01-050-8013	61	13
11083	2P2772	2990-01-053-4534	4	12
			7	18
			14	10
11083	2P2817	2815-01-050-8141	8	3
11083	2P3230	5330-01-058-9176	56	11
11083	2P3696	2930-01-053-4539	60	11
			169	15
11083	2P4005	2940-00-125-9544	21	10
11083	2P4303	2940-01-058-8073	21	5
11083	2P4304	5307-01-053-4540	21	7
11083	2P4305	5330-00-216-8533	19	8
			21	3
11083	2P4389		98	17
11083	2P4394		98	6
11083	2P4448		98	35
11083	2P4470		98	11
11083	2P4538		96	7
11083	2P4539		96	12
11083	2P5149	2815-01-050-8017	6	12
11083	2P5677	5360-01-066-1431	132	6
11083	2P5697		98	32
11083	2P5698		98	24
11083	2P5746		118	15
11083	2P5747		118	16
11083	2P5755	5360-01-097-9195	105	26
			118	7
11083	2P5764		118	19
11083	2P5806		97	2

CROSS-REFERENCE INDEXES

PART NUMBER INDEX

CAGEC	PART NUMBER	STOCK NUMBER	FIG.	ITEM
11083	2P5861		98	4
11083	2P6104		66	7
11083	2P7214	4730-00-762-2120	34	8
11083	2P7554		25	28
11083	2P7555		25	25
11083	2P8225	2910-01-050-9979	50	28
11083	2P8226	2910-01-050-9980	50	13
11083	2P8234	5330-00-205-3582	50	27
11083	2P8353	3110-01-097-9999	128	23
11083	2P8386	5365-01-053-7324	199	15
11083	2P8447		132	55
11083	2P8630	5315-01-067-2168	48	4
11083	2P8632		47	44
11083	2P8643	5330-00-202-0882	50	7
11083	2P8669	5330-00-202-0890	47	39
11083	2P8679	2910-01-050-9982	47	34
11083	2P8686	2990-00-195-9374	47	26
11083	2P8697	5330-00-202-0893	47	50
11083	2P8707		47	43
11083	2P8801	2910-01-050-9983	50	26
11083	2P8803	5310-01-050-9984	50	21
11083	2P8804		50	22
11083	2P8813		19	3
11083	2P8875	2910-01-050-9985	50	23
11083	2P8939	2910-00-549-4799	50	17
11083	2P9187		98	23
11083	2P9193		98	50
11083	2P9277		113	14
11083	2P9334		98	26
11083	2P9336		98	22
11083	2P9845	5306-01-051-2310	12	1
11083	2P9858		132	25
11083	2R4821		208	32
11083	2R6276		131	28
11083	2R6806		143	11
76260	2S-22373-1		119	3
11083	2S0007		48	8
11083	2S0115	5310-00-419-1363	122	5
			128	13
			147	27
			154	23
11083	2S0672	2520-00-495-6199	119	28
11083	2S1378	5365-00-981-8545	119	27
11083	2S1654	5310-00-193-1076	170	12
11083	2S2053	4730-01-053-4546	54	8
11083	2S2109	5340-00-490-9869	167	57
11083	2S2251	5330-00-238-7694	5	10
11083	2S2760	5360-00-434-7167	18	16
11083	2S2846		56	12
11083	2S3770	5365-01-180-8785	24	4
11083	2S4078	5330-00-429-3542	111	2

CROSS-REFERENCE INDEXES

PART NUMBER INDEX

CAGEC	PART NUMBER	STOCK NUMBER	FIG.	ITEM
11083	2S4078	5330-00-429-3542	150	5
			155	24
			157	29
			206	61
			221	19
11083	2S4080	5330-00-931-4522	113	15
11083	2S4663	5330-00-470-5727	111	34
11083	2S4872	2520-01-059-9356	103	34
11083	2S5016	4130-01-063-0737	193	2
11083	2S6150	2930-00-402-8215	64	17
11083	2S6151	5330-00-948-2300	64	16
11083	2S6160	5310-00-143-6382	109	6
11083	2S6218	5305-01-102-7326	75	10
11083	2S6689		64	5
11083	2S696	2520-01-059-9414	103	4
11083	2S7391	2910-00-137-2004	49	9
11083	2S7593	5310-00-413-6522	131	42
11083	2S795	5330-00-936-2162	112	7
11083	2S8439	5330-01-021-9880	115	13
11083	2S9556	5305-01-102-7341	92	68
			163	16
11083	2V0003		132	10
11083	2V0014		132	24
11083	2V0015		132	29
11083	2V0016		132	27
11083	2V0018		44	17
11083	2V2014		170	6
11083	2V2043	5310-01-105-1849	138	6
11083	2V2044		138	9
11083	2V2046		138	18
11083	2V2065		44	4
11083	2V2097	5315-01-109-8115	44	30
11083	2V2098		44	19
11083	2V2099		44	35
11083	2V2101		44	34
11083	2V2102		45	18
11083	2V2108		152	31
11083	2V2109		153	17
11083	2V2152		44	23
11083	2V2153		44	36
11083	2V2154		45	17
11083	2V2155		44	20
11083	2V2156	5330-01-107-5183	44	5
11083	2V2157		44	10
11083	2V2158	5330-01-107-5187	44	9
11083	2V2161		44	26
11083	2V2167		116	18
11083	2V2169		116	24
11083	2V2175		130	43
11083	2V2176		130	68
11083	2V2178		130	78

CROSS-REFERENCE INDEXES

PART NUMBER INDEX

CAGEC	PART NUMBER	STOCK NUMBER	FIG.	ITEM
11083	2V2179		130	72
11083	2V2180		130	62
11083	2V2182		130	46
11083	2V2184		130	66
11083	2V2197		130	36
11083	2V2198		130	30
11083	2V2199	4710-01-242-4898	130	26
11083	2V2200	4710-01-242-4897	130	21
11083	2V2244		180	21
			182	11
11083	2V2245		180	20
			182	9
11083	2V2258		95	1
11083	2V2380		92	44
11083	2V2421		151	56
11083	2V2423		151	36
11083	2V2541		95	2
11083	2V2637		185	19
11083	2V2680		177	1
11083	2V2691		65	30
11083	2V2734		162	3
			0165	3
11083	2V2739		165	4
11083	2V2743		165	6
11083	2V2746		165	5
11083	2V2792	5340-01-113-3419	95	20
11083	2V2793	5340-01-098-4008	117	15
11083	2V2931		117	44
11083	2V2934		117	5
11083	2V2938		127	11
11083	2V2962		117	32
11083	2V2963	4720-01-097-0392	117	47
11083	2V2965		117	19
11083	2V2979		151	58
11083	2V2986		151	5
11083	2V2988		151	62
11083	2V2990		117	28
11083	2V2991		117	54
11083	2V2996		176	7
11083	2V2997		176	7
11083	2V2999	5340-01-286-6227	82	7
11083	2V3000		82	8
11083	2V3001		82	8
11083	2V3020		82	15
11083	2V3078		45	8
11083	2V3082		45	6
11083	2V3145		159	12
11083	2V3172		132	44
11083	2V3173		131	19
11083	2V3215	5330-01-102-7375	110	33
11083	2V3219		146	11

CROSS-REFERENCE INDEXES

PART NUMBER INDEX

CAGEC	PART NUMBER	STOCK NUMBER	FIG.	ITEM
11083	2V3222	5340-01-107-4475	110	34
11083	2V3581		186	10
11083	2V3582		186	12
11083	2V3627		163	30
11083	2V3629		187	12
11083	2V3631		187	11
11083	2V3639		163	8
11083	2V3708	5310-01-104-4874	163	24
11083	2V3709		163	23
11083	2V3713		110	16
11083	2V3714		163	25
11083	2V3715		163	9
11083	2V3716		163	6
11083	2V3717		132	20
11083	2V3758		171	19
11083	2V3761		132	18
11083	2V3763		132	41
11083	2V3764		132	4
11083	2V3767		131	3
11083	2V3769		132	32
11083	2V3785		65	57
11083	2V3799		163	19
11083	2V3801		163	22
11083	2V3804		163	13
11083	2V3822		163	20
11083	2V3849		171	6
11083	2V3850		171	13
11083	2V3851		171	24
11083	2V3987		186	3
11083	2V3989		186	4
11083	2V4043		171	10
11083	2V4044		171	8
11083	2V4148		128	40
11083	2V4149		128	41
11083	2V4305		180	2
11083	2V4306		180	5
11083	2V4370		45	14
11083	2V4371		122	14
11083	2V4399		131	16
11083	2V4400		131	50
11083	2V4440		122	37
11083	2V4461		122	18
11083	2V4462		122	13
11083	2V4700		154	20
11083	2V4719		130	61
11083	2V4734		122	6
11083	2V4897		122	22
11083	2V5036		117	34
11083	2V5038		117	37
11083	2V5040		95	16
11083	2V5043	4720-01-163-7180	117	10

CROSS-REFERENCE INDEXES

PART NUMBER INDEX

CAGEC	PART NUMBER	STOCK NUMBER	FIG.	ITEM
11083	2V5095		171	21
11083	2V5116		92	36
11083	2V5455		90	39
11083	2V5668		45	27
11083	2V5673		45	25
11083	2V5687		45	12
11083	2V5702		132	47
11083	2V5703		132	49
11083	2V5704		131	45
11083	2V5705		132	35
11083	2V5706		131	26
11083	2V5707		131	22
11083	2V5903		145	27
11083	2V6076		110	48
11083	2V6077		88	6
			92	16
11083	2V6078		110	41
11083	2V6129		124	19
11083	2V6143		124	26
11083	2V6238		185	23
11083	2V6239		185	21
11083	2V6240	4710-01-302-7741	185	7
11083	2V6241		185	9
11083	2V6350	5340-01-102-4352	206	45
11083	2V6351	5340-01-102-4351	206	25
11083	2V6352	5340-01-102-1791	206	46
11083	2V6353	5340-01-102-3519	206	26
11083	2V6354		206	68
11083	2V6371		147	4
11083	2V6467		174	20
11083	2V6570		138	11
11083	2V6708		168	21
11083	2V6709		168	34
11083	2V6715		169	3
11083	2V6746		152	9
11083	2V6758		152	14
11083	2V6760		153	25
11083	2V6761		152	4
11083	2V6767		75	35
11083	2V6778		131	38
11083	2V6782		220	7
11083	2V7050		89	1
11083	2V7152		168	14
11083	2V7170		122	32
11083	2V7225		111	6
11083	2V7226		132	3
11083	2V7237		111	25
11083	2V7246		111	8
11083	2V7247		111	5
11083	2V7248		111	11
11083	2V7249		111	10

CROSS-REFERENCE INDEXES

PART NUMBER INDEX

CAGEC	PART NUMBER	STOCK NUMBER	FIG.	ITEM
11083	2V7252	5365-01-249-7697	111	23
11083	2V7253		111	22
11083	2V7254		111	12
11083	2V7343		221	49
11083	2V7364		111	4
11083	2V7366		111	15
11083	2V7367		111	14
11083	2V7371		168	30
11083	2V7372		168	31
11083	2V7394		90	28
11083	2V7396		90	10
11083	2V7397		90	4
11083	2V7417		162	16
11083	2V7469	3040-01-242-4728	111	9
11083	2V7511		167	45
11083	2V7512		167	48
11083	2V7534		168	15
11083	2V7571		75	13
			77	8
11083	2V7595		168	25
11083	2V7607		145	33
11083	2V7616	2590-01-222-5493	88	7
11083	2V7708		151	48
11083	2V7709		151	43
11083	2V7729		168	22
11083	2V7730		167	61
11083	2V7777		143	39
11083	2V7849		145	1
11083	2V7869	5330-01-097-6630	186	18
11083	2V7901		205	32
11083	2V7963		130	83
11083	2V7964		130	25
11083	2V7966		130	87
11083	2V7967		130	51
11083	2V7973		165	7
11083	2V7993		92	43
11083	2V9009		110	53
11083	2V9043	6150-01-298-1505	90	13
11083	2V9053		116	22
11083	2V9054		116	10
11083	2V9062		42	47
11083	2V9095		42	27
			221	34
11083	2V9166	5310-01-101-6056	145	14
11083	2V9167	5315-01-098-6453	145	21
11083	2V9268		168	12
11083	2V9292		167	17
11083	2V9298		142	7
11083	2V9301	4720-01-181-8496	143	17
11083	2V9302		142	
			0021	21

CROSS-REFERENCE INDEXES

PART NUMBER INDEX

CAGEC	PART NUMBER	STOCK NUMBER	FIG.	ITEM
11083	2V9302		0143	21
11083	2V9345		143	43
11083	2V9346		142	1
11083	2V9347		143	1
11083	2V9348		143	6
11083	2V9350		170	17
11083	2V9381	5330-01-097-9434	163	41
11083	2V9382	5330-01-098-9992	163	43
11083	2V9383	5330-01-097-9435	163	38
11083	2V9384	5330-01-097-9438	163	42
11083	2V9473	5961-01-156-7247	79	2
			92	57
11083	2V9667	4710-01-242-4896	117	50
11083	2V9675		167	63
11083	2V9692	2540-01-302-2564	174	9
11083	2V9826		186	17
11083	2V9827		187	4
11083	2V9874		169	26
11083	2V9911		188	1
11083	2W1733	5330-01-102-3251	6	3
11083	2W7984	5330-01-102-3525	5	26
11083	2Y1834	5340-01-113-0897	90	31
11671	2C-16KH3390		148	15
			149	17
			195	10
24617	2018582	5310-00-050-3520	161	14
91725	204		200	19
61208	204151-B		98	15
27315	2045V007	5310-00-007-9861	42	26
			159	2
			169	17
			220	10
96151	20599	5330-00-797-8389	144	6
62983	206086		218	20
62983	206772	5360-00-918-3760	218	21
72962	21NU040	5310-00-660-1938	90	44
61208	211444-A		98	13
96151	212-1024-001		144	1
10988	214-256	4730-01-072-1366	168	17
12603	214596	3110-00-554-2974	97	11
11671	21534		148	17
11671	21677		148	25
11671	21678		148	36
61208	217506		98	1
11671	22088		149	8
11671	22090	5340-01-288-7014	149	16
11671	22091	5340-01-288-7013	149	7
62983	222640	2530-00-087-0327	219	10
62983	223153	5307-00-548-7261	219	4
08108	2232	6240-00-519-3399	86	2
62983	223388	5360-00-953-5205	219	7

best copy available

Reproduced from poor document.

CROSS-REFERENCE INDEXES

PART NUMBER INDEX

CAGEC	PART NUMBER	STOCK NUMBER	FIG.	ITEM
62983	223489		219	18
62983	223493		219	19
62983	223897		219	15
62983	223898		219	11
11671	22449		148	29
74006	2251-205	5305-01-023-9672	173	16
66195	22524R1	5305-00-725-2317	207	69
11671	22527	3805-00-320-4991	148	35
11671	22528	3805-00-320-5007	148	44
11671	22578		148	19
62983	226157	5330-00-833-3650	218	15
62983	226161		219	20
62983	226163	5330-00-833-3651	218	14
11671	22693		148	31
11671	22792	5340-01-288-1632	149	9
70082	2296	2540-01-184-2289	184	10
80045	23MS35338-10	5310-00-584-5272	209	13
62983	233019	4820-01-132-0582	219	40
11671	23324		148	23
62983	235145	5360-00-953-5209	219	13
62983	235415		218	27
		4820-00-471-0026	219	12
62983	235416	4730-01-069-4045	218	29
			219	14
73680	23548-4754	5330-00-605-1009	134	15
			156	13
52555	2355-1		207	73
			208	75
			209	66
65508	2356-1	5315-01-249-1051	209	43
52555	2364-1		207	36
			209	39
62983	237736		219	17
62983	237824		218	25
07742	238-06		197	10
62983	238085	5360-00-478-9867	218	28
62983	238834	5360-00-833-3648	218	8
71741	24-30B		188	7
11132	240430		200	8
11671	24066	3020-00-300-6843	148	34
62983	242076	5330-00-833-3652	218	18
62983	242079	3120-00-839-1480	218	22
62983	242092		218	3
11671	24248		195	4
52555	2438-1		207	37
52555	2441-10		207	11
62983	246632	5360-00-960-9326	219	30
11671	24978		149	11
11671	24985		195	8
11671	24986		195	7
80813	250-007	5355-01-226-8782	145	30

CROSS-REFERENCE INDEXES

PART NUMBER INDEX

CAGEC	PART NUMBER	STOCK NUMBER	FIG.	ITEM
80813	250-702	5355-01-097-8255	127	5
28882	250058		173	1
11671	25023		149	10
11671	25082		148	33
			0148	21
11132	252154		200	11
62983	252509	5975-01-012-3538	218	26
62983	252523	5310-01-014-5495	218	24
62983	252615		218	19
11671	25297		195	18
11671	25335		148	24
11671	25372		195	6
11083	254-160801-00		179	37
62983	254968		219	33
62983	254969		0033	33
11671	25562		195	3
11671	25658		KIT	
11671	25768		148	18
11671	25777		148	30
11671	25792	5330-01-112-6666	195	5
11671	25862		148	32
11671	25873		148	20
62983	259871	5360-00-918-1920	219	39
84290	26024		199	17
84290	26028		199	16
11671	26058-C		KIT	
11132	261685		200	4
62983	271722		219	9
			219	35
28882	280042		173	5
28882	280065		173	10
62983	282027	5305-00-471-3909	219	25
62983	283781		219	32
62983	283782		219	23
62983	283785		219	2
			219	5
62983	283856		219	21
62983	284154	5340-00-889-5209	219	26
62983	284155	2530-00-087-0369	219	27
62983	284156	5310-00-867-1465	219	31
79550	2863	5940-00-291-0085	74	5
			83	15
70485	2866	5325-00-359-5448	81	8
62983	286669		219	22
81221	287126	2520-01-198-7408	120	2
72962	29M-82	5310-00-804-3919	188	6
82465	29NTE1213	5310-01-113-2283	179	8
77551	294143		172	47
77060	2965683	6250-01-213-6163	78	4
77060	2973916	5940-01-059-0885	193	4
77060	2984646		193	3

CROSS-REFERENCE INDEXES

PART NUMBER INDEX

CAGEC	PART NUMBER	STOCK NUMBER	FIG.	ITEM
3078C	3/4X318PTR-S		186	23
11083	3BC551	4730-00-263-3122	7	3
			16	16
			42	24
			59	37
11083	3B0623	5340-00-229-9294	5	29
11083	3BC645	5340-00-365-5169	3	30
			5	32
11083	3B2968	5306-00-426-4171	165	10
11083	3B4502	5310-00-852-8266	69	44
			163	17
11083	3B4503	5310-01-097-6612	90	26
			180	28
11083	3B4504		190	19
			208	33
11083	3B4508	5310-01-236-9975	199	26
			208	18
11083	3B4607	5315-00-839-2326	45	2
			127	2
			161	20
			167	39
11083	3B4611		199	23
11083	3B4615	5315-00-431-7315	138	21
11083	3B4617		209	16
11083	3B4632	5315-01-167-3655	208	37
11083	3B5328		209	19
11083	3B6496	4730-00-249-3917	168	20
11083	3B7255	4730-00-193-0871	73	21
			186	25
11083	3B7271		168	19
11083	3B7275	4730-01-254-8683	42	30
			221	36
11083	3B7289		186	24
11083	3B7733	4730-00-196-2067	185	12
11083	3B9378	5330-00-641-2164	126	23
11083	3B9391	4730-00-011-8537	185	8
			185	10
			185	20
			185	22
			185	24
11083	3D2824	5330-00-944-8281	29	11
11083	3D2871	5307-00-411-4501	7	15
11083	3D2992	5330-00-393-4054	29	15
11083	3D490	5307-00-411-4502	108	78
11083	3D6509	5315-01-060-3748	123	9
11083	3D6678	2520-00-920-2040	221	25
11083	3D7854	5365-01-063-2978	87	25
11083	3D8422	5330-00-930-2476	122	9
11083	3D8752	5310-01-095-1247	45	19
11083	3D9718		77	33
11083	3D9779	5315-01-103-1897	75	19

CROSS-REFERENCE INDEXES

PART NUMBER INDEX

CAGEC	PART NUMBER	STOCK NUMBER	FIG.	ITEM
11083	3D9799	5305-01-102-9823	92	41
11083	3F1688		83	10
11083	3F2371	5930-00-132-8283	77	25
11083	3F3442	5315-01-151-1102	106	27
11083	3F3711	5310-01-097-8230	92	73
11083	3F5792	5330-00-234-4870	108	76
11083	3F6486		30	15
11083	3F9556	5310-00-167-0721	27	6
			47	40
			92	67
11083	3G0730		135	13
11083	3G0839		0150	1
11083	3G1797		0195	15
11083	3G2228		132	43
11083	3G3273	5360-01-202-2099	221	9
11083	3G3281	5330-01-102-1814	150	13
11083	3G4106		150	9
11083	3G5873	4320-01-101-8685	195	24
11083	3G5985		221	54
11083	3G7232	4330-01-199-3109	221	1
11083	3G9886		154	8
11083	3H0120	4730-00-924-7975	201	38
11083	3H1118	5315-01-062-7137	189	14
			190	15
11083	3H122	4730-00-172-0049	120	3
11083	3H1461	5330-00-593-1193	134	5
11083	3H1489	5315-00-393-5684	33	11
11083	3H1977	5315-00-891-0815	222	4
11083	3H2549	5340-00-405-7400	157	16
11083	3H5368	5306-00-916-1943	152	30
11083	3H6591	5306-01-102-7321	106	20
11083	3H8726	5340-00-971-4820	66	11
11083	3J1907		0036	36
11083	3J5390	4730-00-427-5121	59	35
			67	7
11083	3J7283	4730-00-010-9365	199	40
11083	3J7352	4730-00-834-5035	111	19
			139	9
11083	3J7354	5330-00-952-8008	34	11
			101	13
			111	20
			130	56
			131	18
			135	18
			136	13
			139	10
			0034	34
11083	3J7470	5340-00-949-0311	136	5
11083	3J7473	5365-00-944-0863	136	6
			157	13
11083	3K0810	5365-01-066-4718	48	12

CROSS-REFERENCE INDEXES

PART NUMBER INDEX

CAGEC	PART NUMBER	STOCK NUMBER	FIG.	ITEM
11083	3K1644	5305-01-097-8927	110	1
11083	3K2478		137	6
11083	3K2518	3110-00-144-8577	126	24
11083	3K2559	2520-01-066-9170	201	8
11083	3K3256	5307-01-063-0644	13	6
11083	3K5234	5310-00-470-9833	121	9
			139	18
11083	3K5601	5315-01-069-0765	222	20
11083	3K6060	5310-01-113-4047	177	13
11083	3K6168	5305-01-102-7337	163	28
11083	3K6325		44	24
11083	3K6401	5365-01-124-6834	147	30
11083	3K6412	5365-01-099-2941	147	25
11083	3K6455	5330-01-098-3168	147	22
11083	3K7928		186	5
11083	3K846	4730-01-095-2126	23	2
50948	3K8460		33	26
11083	3K8584	5315-01-113-4175	179	39
11083	3K8660		168	9
11083	3K9042	5365-01-060-2087	44	14
11083	3K925	5310-00-413-5060	77	18
11083	3K9604		119	16
11083	3K9608	2520-00-929-5607	119	1
			119	25
			122	33
11083	3K9616	3110-00-190-9310	119	18
11083	3K9617		119	2
11083	3K9917		119	24
11083	3L1425	3110-00-555-5207	61	14
11083	3L1473	5315-00-276-5160	178	38
			179	54
11083	3M0496	5307-00-900-5570	14	6
11083	3M1339	2940-00-103-8872	42	19
11083	3M1588	2910-00-949-0068	42	12
11083	3M1836		42	13
11083	3M1837		42	16
11083	3M2452		94	17
11083	3N2818		145	12
11083	3N4731	5310-01-113-1315	177	9
11083	3N6411	3110-00-678-1862	107	11
11083	3N6412	3110-00-727-6901	107	10
11083	3P0009	2910-01-066-4752	46	5
11083	3P0377		113	3
11083	3P0381		113	1
11083	3P0887	2940-01-150-3865	115	7
11083	3P0969		151	15
11083	3P1323	5306-01-050-8020	3	13
11083	3P1389	5340-01-060-2023	122	10
11083	3P1427		206	60
11083	3P1979	5330-00-202-1468	50	30
11083	3P2408		107	14

CROSS-REFERENCE INDEXES

PART NUMBER INDEX

CAGEC	PART NUMBER	STOCK NUMBER	FIG.	ITEM
11083	3P2411		109	4
11083	3P2413		105	24
11083	3P2414		105	31
11083	3P2415		106	11
11083	3P2683		104	20
11083	3P2684		104	16
11083	3P2685		105	18
			106	32
11083	3P2759		105	2
11083	3P2760		104	35
11083	3P2761		106	1
11083	3P2768		106	43
11083	3P2791		106	57
11083	3P2792	5330-01-108-3780	106	44
11083	3P2793	5330-01-102-3256	104	38
			105	19
			0106	33
11083	3P2794		105	20
			106	34
11083	3P2795	5330-01-102-3255	104	37
11083	3P2810		104	24
11083	3P2893	5330-01-119-8947	108	7
11083	3P2922	5365-01-097-6833	108	4
11083	3P2983		104	9
11083	3P3059		105	35
11083	3P3060		106	6
11083	3P3096		105	1
11083	3P3097		104	5
11083	3P3098		105	15
11083	3P3180		105	28
			106	10
11083	3P3242		106	14
11083	3P3245		104	17
11083	3P3246	3040-01-102-5746	104	29
11083	3P3304		106	47
11083	3P3321		104	15
11083	3P3349		107	4
11083	3P3355	3020-01-097-8473	108	10
11083	3P3356	3020-01-098-3976	108	71
11083	3P3357	3020-01-097-8472	108	37
11083	3P3418	3020-01-098-7412	104	1
11083	3P3428	3130-01-304-2479	108	79
11083	3P3429	3110-01-097-9632	108	3
11083	3P3430		126	20
11083	3P3461	5330-01-097-6632	100	8
11083	3P3473		107	1
11083	3P3475		107	21
11083	3P3495	5365-01-097-9217	107	5
11083	3P3498		107	29
11083	3P3499		107	22
11083	3P3501		107	23

CROSS-REFERENCE INDEXES

PART NUMBER INDEX

CAGEC	PART NUMBER	STOCK NUMBER	FIG.	ITEM
11083	3P3503	5365-01-097-9218	108	73
11083	3P3504		108	50
11083	3P3505		126	22
11083	3P3506		108	61
11083	3P3507		108	63
11083	3P3511		108	64
11083	3P3513		108	56
11083	3P3514		108	57
11083	3P3515		107	27
			108	60
11083	3P3556		108	77
11083	3P3560	3040-01-097-9577	108	68
11083	3P3566		107	28
			108	54
11083	3P3567		107	24
			108	55
11083	3P3596		100	5
11083	3P3635		106	48
11083	3P3673		98	41
			106	52
11083	3P3707		105	3
11083	3P3708		104	11
11083	3P3735		106	49
11083	3P3737		104	2
11083	3P3738		105	23
11083	3P3739		104	18
11083	3P380	4320-01-104-5113	113	2
11083	3P3821		0105	43
11083	3P4050		106	12
11083	3P4051		104	8
11083	3P4054		105	39
11083	3P5431		106	38
11083	3P6037	3020-01-097-9607	107	9
11083	3P6038	3020-01-098-6868	107	17
11083	3P6061	5330-01-021-9052	107	33
11083	3P647	5330-00-367-5650	101	6
11083	3P651	5330-00-367-5653	221	68
11083	3P7230		98	16
11083	3P7447		104	23
			105	17
			106	31
11083	3P7489		106	39
11083	3P764	4730-01-059-9493	25	37
			73	18
11083	3P7993	2940-01-062-7140	190	21
11083	3P8186		108	20
11083	3P8963		98	43
11083	3P9094	2520-01-105-0078	99	1
11083	3P9200	5340-01-103-0273	185	4
11083	3P9366		105	29
11083	3P9367		104	39

CROSS-REFERENCE INDEXES

PART NUMBER INDEX

CAGEC	PART NUMBER	STOCK NUMBER	FIG.	ITEM
11083	3P9600	3110-01-102-1995	107	19
11083	3P9658	5365-01-105-2285	107	18
11083	3P9900	5310-01-097-9416	178	1
11083	3P9922		100	15
11083	3R2371	2920-00-130-3783	169	8
11083	3R2704	4730-00-903-7652	43	18
11083	3R4463	4730-00-816-8558	117	53
			142	3
11083	3R5883		217	16
11083	3R8530	3120-01-112-9254	164	11
11083	3R8920	5925-01-157-4604	92	39
11083	3SC036	2520-01-069-0889	7	16
11083	3S0602	3040-01-032-3129	49	7
11083	3S1262	5340-01-068-7154	126	8
11083	3S1282	2520-01-059-0901	98	49
11083	3S1284	2520-01-059-7193	98	48
11083	3S1372		100	3
11083	3S1373	5330-01-119-7210	100	4
11083	3S2093	2920-01-058-9099	67	4
			91	15
11083	3S2708	5315-01-059-7198	104	28
			105	13
			106	15
11083	3S328	5365-01-108-8866	119	20
11083	3S329	5365-01-108-8867	119	21
11083	3S3433	3120-01-029-2580	155	13
11083	3S3911	5340-01-099-0110	130	18
11083	3S4	5310-00-413-5144	113	23
11083	3S5390		5	23
11083	3S6605	5340-01-102-3538	3	3
11083	3S7116	5365-01-067-1426	19	13
			19	18
			117	39
			151	64
			152	33
			153	19
			206	56
			206	75
11083	3S7166	5340-01-051-6767	65	59
			130	7
			130	40
			130	70
			130	74
			130	80
			130	88
			131	30
			203	4
			203	12
			203	38
			206	58
11083	3S7252	3120-00-236-1319	65	11

CROSS-REFERENCE INDEXES

PART NUMBER INDEX

CAGEC	PART NUMBER	STOCK NUMBER	FIG.	ITEM
11083	3S7252	3120-00-236-1319	65	27
			117	6
			130	64
			152	6
			152	16
			153	27
			204	12
			204	27
			206	19
11083	3S7445		135	9
11083	3S7446		135	3
11083	3S7450	5330-01-097-6634	135	7
11083	3S8038		105	14
11083	3S8183	5935-01-062-7141	191	13
			193	5
11083	3S8330	3830-01-051-7599	151	7
			151	41
			151	51
			151	60
			152	25
11083	3S8360	4730-01-062-5203	130	8
			130	69
			130	75
11083	3S8363	4730-01-053-2694	130	41
			130	73
			130	79
11083	3S8496	4730-01-051-7600	152	15
11083	3S8498		153	28
11083	3S8499	4730-01-064-7391	152	5
11083	3S8503	4730-01-051-7601	65	10
			65	28
11083	3S8536		92	60
11083	3S8568	4730-01-063-5692	117	45
			206	74
11083	3S8570	4730-01-097-4728	117	40
11083	3S8573	4730-01-063-0684	19	17
11083	3S8606	4720-01-051-7602	205	2
			205	10
			205	14
11083	3S8652	5360-00-455-7191	115	10
11083	3S8664	5340-01-051-2311	56	31
11083	3S8665	5340-01-098-6683	73	6
11083	3S9327		151	59
11083	3S9329	4730-01-107-2346	151	40
11083	3S9330		151	50
11083	3S9331		151	42
			151	52
58312	3S9643-00	5330-00-246-6380	59	8
11083	3S9880	5340-01-102-3540	108	49
16764	3T1888		69	14
11083	3V0163		65	51

CROSS-REFERENCE INDEXES

PART NUMBER INDEX

CAGEC	PART NUMBER	STOCK NUMBER	FIG.	ITEM
11083	3V0165		65	36
11083	3V0166		65	47
11083	3V0172		65	35
11083	3V0188		65	9
11083	3V0189		65	24
11083	3V0190		65	31
11083	3V0191		65	49
11083	3V0403		65	50
11083	3V0423		65	46
11083	3V0581		167	35
11083	3V0603		43	10
11083	3V0604		43	11
11083	3V0605		43	16
11083	3V0606		43	17
11083	3V0608		43	7
11083	3V0609		43	3
11083	3V0610		43	4
11083	3V0611		43	2
11083	3V0612		43	1
11083	3V0729		95	3
11083	3V0730		117	21
11083	3V0778		143	34
11083	3V0839		151	54
11083	3V0848		125	3
11083	3V0849		125	4
11083	3V0851		125	10
11083	3V1078	5315-01-102-8570	161	9
11083	3V2047		163	39
11083	3V2197		168	3
11083	3V2660		151	39
11083	3V2661		151	49
11083	3V2738		88	14
11083	3V3078		172	28
11083	3V3083		172	27
11083	3V3261		166	7
11083	3V3306	5310-01-102-3536	206	22
11083	3V3308	5310-01-102-9865	83	11
			116	5
11083	3V3787		168	38
11083	3V4033	3120-01-105-1948	0123	3
11083	3V4046	3010-01-097-0513	126	16
11083	3V4163		172	1
11083	3V4164		172	29
11083	3V5648		146	15
11083	3V5850		169	25
11083	3V5851		169	18
11083	3V5953		128	31
11083	3V6176		92	56
11083	3V7866		128	19
11083	3V7867	5365-01-097-6827	161	6
11083	3V7868		206	24

CROSS-REFERENCE INDEXES

PART NUMBER INDEX

CAGEC	PART NUMBER	STOCK NUMBER	FIG.	ITEM
11083	3V7899		130	39
11083	3V8091		167	31
11083	3V8092		167	30
11083	3V8103		180	16
			182	14
11083	3V8142		167	32
11083	3V8252	2540-01-163-7365	177	3
11083	3V8325		90	6
11083	3V8513		111	7
53203	300-450		53	17
70611	3000M3628-3		92	71
11083	300060	3110-00-144-9455	25	24
11083	300061	3110-00-144-9793	25	23
58854	30122-C	6210-00-941-5863	77	2
75418	3058-00843-06	5310-00-038-9417	90	36
			189	2
62983	307197	5365-00-833-3649	218	13
62983	307198		219	16
11083	307935	4730-01-066-7651	65	23
			204	1
			206	16
11083	307942	4730-01-051-2312	34	1
			130	60
11083	307946	4730-01-062-5206	131	44
			132	33
32705	307951		65	14
			206	53
			219	24
78640	307975	4730-00-804-5092	206	62
11083	308538	5306-01-097-8930	167	41
			168	11
13499	310-0742-010	5310-01-047-0423	172	35
11083	310228	5306-01-110-1886	98	44
11083	310243	5305-01-053-4553	194	15
62983	313844		218	16
62983	313868	5365-00-839-1520	218	6
62983	313921		218	5
11083	315744	4730-01-185-5347	203	3
			204	3
11083	316281	4730-01-162-6354	143	30
11083	318759	4730-01-156-9977	206	49
11083	319253	5306-01-097-8931	168	1
62983	319701	4820-00-470-9869	218	9
62983	319962	5365-00-839-1481	218	11
11083	320683	5305-01-214-7569	173	13
78640	32143	4730-00-277-9141	186	16
11671	32719		195	19
00779	32975	5940-00-688-7204	74	9
11083	330369		77	11
71870	33520		42	35
			221	39

CROSS-REFERENCE INDEXES

PART NUMBER INDEX

CAGEC	PART NUMBER	STOCK NUMBER	FIG.	ITEM
11083	335358	5305-01-115-0716	177	8
11083	335786		77	12
			172	14
23040	33797S36	5310-00-804-4806	88	12
			172	57
			188	12
			202	8
99953	338248	5340-01-102-7941	202	43
37C86	34-7396		75	11
11083	340106	5305-01-102-1826	221	7
11083	343557	5306-01-105-1790	160	5
			167	10
			177	18
77313	344969		222	7
77313	344970		222	6
77313	344971		222	22
77313	344972		222	23
12195	35/65-R33XRDN-1A	2610-01-114-3732	141	1
60380	35SF56	3120-01-084-4832	199	36
23540	359-14		163	26
11083	360594		172	11
65508	3619-1		208	19
			209	14
96151	370	2530-00-716-7950	144	10
77313	377388		222	21
11083	38747		73	8
			221	35
85757	3903-06546	4730-01-106-3973	202	15
			202	26
			202	39
84561	4-035-250	4720-00-604-6497	32	12
			221	62
71741	4-10		188	11
11083	4B0418	5340-01-067-8042	116	2
			130	20
11083	4B1222	5305-01-102-7325	75	16
11083	4B1239	5305-01-109-0590	172	33
11083	4B1247	5305-01-102-9822	90	24
11083	4B1264	5305-01-062-7143	181	10
11083	4B1550	5310-01-063-2983	181	21
			183	20
11083	4B2040	5310-00-852-5199	77	10
11083	4B2041	5310-01-063-0686	180	30
11083	4B2047	5310-00-011-0634	174	7
11083	4B2048	5310-00-934-9766	172	36
11083	4B2049		92	69
			192	5
11083	4B2051	5310-01-097-6607	90	27
11083	4B2363	5365-00-423-9251	108	35
11083	4B4098	5340-00-200-5218	124	28
11083	4B4229	5360-00-249-3502	145	15

CROSS-REFERENCE INDEXES

PART NUMBER INDEX

CAGEC	PART NUMBER	STOCK NUMBER	FIG.	ITEM
11083	4B4274		75	20
			145	9
			163	18
			192	11
11083	4B4277	5310-00-362-8168	28	31
			172	58
			172	60
11083	4B4278	5310-01-266-2481	42	41
			45	21
			82	6
			92	70
			114	7
			134	12
			137	28
			138	15
			151	35
			185	2
			187	14
			188	14
			191	20
			194	17
			221	44
			222	38
11083	4B4279	5310-00-118-3035	82	10
11083	4B4280	5310-00-930-7013	90	12
			142	15
			153	13
			155	17
			157	24
			158	22
			178	22
			206	43
			222	2
11083	4B4284	5310-01-062-7144	145	25
11083	4B4863	5310-00-432-8001	69	32
			92	42
11083	4B5423	5330-00-143-8713	42	15
11083	4B5949	2910-00-367-5238	42	14
11083	4B7255	3110-00-100-0233	107	8
11083	4B8710	5360-00-249-3500	101	8
11083	4B8756	4730-00-013-7397	61	30
11083	4B9302	5340-01-116-2640	42	45
11083	4B9373	3110-00-100-3638	122	2
11083	4B9374	3110-00-100-0605	122	3
11083	4B9747	5310-01-038-3645	47	48
11083	4B9782	3110-00-011-9935	156	4
			157	31
			158	6
			221	5
			221	21
11083	4B9880	3110-00-949-1438	12	7

CROSS-REFERENCE INDEXES

PART NUMBER INDEX

CAGEC	PART NUMBER	STOCK NUMBER	FIG.	ITEM
11083	4B9880	3110-00-949-1438	103	23
32537	4CB2	4730-00-882-8621	221	59
11083	4D1577	5330-00-081-3139	129	6
11083	4D1936		90	45
11083	4D2297	5330-00-855-8054	92	34
11083	4D3173	5365-01-060-4700	128	24
11083	4D3704	5310-00-139-7030	2	5
			2	35
			6	11
			7	10
			7	23
			42	7
			68	2
			110	38
			123	7
			124	25
			148	4
			169	20
			195	21
			220	5
11083	4D4471		128	8
11083	4D623	5325-01-114-5106	53	6
11083	4D7411	2540-01-062-9902	183	13
11083	4D7416	5365-01-074-3568	181	12
			183	12
11083	4D7421	5310-01-062-7149	181	6
			183	5
11083	4D7794	5340-00-426-4656	91	7
			92	10
			110	37
			217	13
11083	4D8123	5340-00-426-4646	85	7
			92	26
11083	4D8621	5330-01-097-6628	97	4
11083	4D9517	5340-00-169-8336	43	19
11083	4F2041	3110-00-101-1796	108	8
11083	4F4879	5306-00-426-5062	143	9
			164	6
			185	1
11083	4F7115	5360-00-597-8351	136	7
			157	12
11083	4F7356	5340-00-675-1297	128	25
11083	4F7387	5330-00-599-0936	20	3
11083	4F7390	5330-00-691-9950	22	13
11083	4F7952	5330-00-527-7748	110	42
11083	4F8824	5330-00-968-5388	59	16
11083	4F9081	5307-01-102-2484	14	19
3078C	4HP5NS		135	19
			136	16
11083	4H1394	2530-00-891-4411	139	25
11083	4H1477		138	17

CROSS-REFERENCE INDEXES

PART NUMBER INDEX

CAGEC	PART NUMBER	STOCK NUMBER	FIG.	ITEM
11083	4H3218	5340-01-102-3518	25	40
11083	4H6730	5330-00-881-1402	97	23
11083	4H7993		138	26
11083	4H8380	5315-00-891-5955	129	20
11083	4H8878	5340-00-875-5251	32	13
11083	4H9027	4730-00-011-0667	42	11
11083	4J0519	5330-00-557-8425	136	36
11083	4J0520	5330-00-613-6516	65	5
			130	4
			131	32
			152	10
			152	13
11083	4J0522	5330-00-613-6519	65	4
			95	12
			117	2
			130	44
			151	66
			152	28
11083	4J0523	5330-00-235-5692	206	51
11083	4J0524	5330-01-026-9557	95	17
			117	43
			151	21
			152	18
			155	18
			157	8
			206	71
11083	4J0527	5330-01-069-0760	95	23
			151	3
			152	20
11083	4J2506	5330-00-436-3369	50	15
			135	4
11083	4J2677	5310-01-110-7920	2	1
			206	3
11083	4J2701	5340-01-059-9645	138	20
11083	4J3295		137	12
11083	4J3297		134	10
11083	4J3302		137	17
11083	4J3303		137	16
11083	4J3420	3830-00-929-3501	154	14
11083	4J3515	5330-00-935-9127	154	4
11083	4J3754	2590-00-101-1685	221	20
11083	4J3815	5330-00-962-4510	221	23
11083	4J3816	5340-01-026-9527	221	22
11083	4J3832		134	20
11083	4J3953		134	18
11083	4J525	5330-00-922-6275	136	37
			155	5
11083	4J5267		130	10
11083	4J528	5330-00-921-0054	155	10
			157	22
11083	4J5325	5315-01-099-0059	45	1

CROSS-REFERENCE INDEXES

PART NUMBER INDEX

CAGEC	PART NUMBER	STOCK NUMBER	FIG.	ITEM
11083	4J5325	5315-01-099-0059	127	1
11083	4J6485		136	23
11083	4J6583	5310-01-102-2479	136	43
11083	4J6748		136	38
11083	4J6750		136	35
11083	4J6802		137	11
11083	4J6803		137	7
11083	4J6806	5340-01-161-2783	136	28
11083	4J6808		136	30
11083	4J6809		136	29
11083	4J7533	5365-00-194-4472	47	9
			47	10
			135	11
			155	21
			155	22
			157	9
			157	10
			158	4
			158	5
11083	4J8265	5310-00-557-9414	172	68
			194	18
			221	79
11083	4J8971		134	9
11083	4J8996	5330-00-948-6924	0136	4
11083	4K0670		79	5
11083	4K1388	2530-00-933-3305	0037	37
11083	4K3777		132	39
11083	4K4114	5330-00-945-0564	137	18
11083	4K5175	5306-00-253-7627	113	17
11083	4K5537	5330-00-122-4090	116	20
11083	4K6297	4730-01-051-2313	143	42
11083	4K7463	5330-00-931-4533	107	3
11083	4K8603	4730-01-148-0865	106	25
78453	4L313-3	6620-01-123-1332	59	6
11083	4L3916	5940-01-058-9112	42	34
			76	9
11083	4L8337	5330-00-074-3773	38	4
11083	4M0503		113	20
11083	4M1336	4730-00-924-7125	60	15
11083	4M1474	5315-00-942-7167	31	13
11083	4M2381	5360-00-950-8041	103	22
11083	4M5317	3120-01-127-5376	25	19
			42	33
			73	16
			121	2
			124	23
			221	40
11083	4M62	5310-00-264-0128	92	47
11083	4M6853	5330-00-931-8015	7	21
11083	4M8239		96	17
11083	4M8303	5330-00-613-6522	27	8

CROSS-REFERENCE INDEXES

PART NUMBER INDEX

CAGEC	PART NUMBER	STOCK NUMBER	FIG.	ITEM
11083	4N0342	2815-01-050-8033	9	7
11083	4N0359		31	12
11083	4N0362	2930-01-053-4603	59	7
11083	4N0418	2815-01-066-4622	6	5
11083	4N0512		18	3
11083	4N0513		18	2
11083	4N0522		18	12
11083	4N0614		3	11
11083	4N0683	2815-01-066-4623	3	23
11083	4N0684	5315-01-066-4624	6	9
			25	34
11083	4N0685	3110-01-066-4625	3	9
11083	4N0729		20	1
11083	4N0776		29	28
11083	4N0790	5330-01-066-5363	4	9
			22	9
			59	13
11083	4N0794	2815-01-050-8003	4	10
			59	40
11083	4N0798		15	2
11083	4N0820	2910-01-066-4732	48	17
11083	4N0823		29	34
11083	4N0824		29	33
11083	4N0848	2815-01-066-4627	25	32
11083	4N0851	2815-01-051-2355	10	6
11083	4N0861		17	3
11083	4N0868		15	8
11083	4N0900		29	20
11083	4N0901		29	19
11083	4N0903		29	6
11083	4N0904		29	7
11083	4N0905		29	29
11083	4N0913	2815-01-066-5282	17	26
11083	4N0914	5340-01-066-5303	17	25
11083	4N0933	5330-01-066-5364	4	13
			7	17
			14	9
11083	4N0951	3040-01-254-5564	46	7
11083	4N1070		7	11
11083	4N1071		7	12
11083	4N1091		32	5
11083	4N1095		32	7
11083	4N1098		32	3
11083	4N1104	5330-01-102-3526	32	4
11083	4N1105	5330-01-102-3262	32	1
11083	4N1106		12	11
11083	4N1107		12	12
11083	4N1114	2990-01-053-4566	7	22
11083	4N1116		33	24
11083	4N1119		33	23
11083	4N1120		33	14

CROSS-REFERENCE INDEXES

PART NUMBER INDEX

CAGEC	PART NUMBER	STOCK NUMBER	FIG.	ITEM
11083	4N1121		33	21
11083	4N1151	5330-01-053-4832	16	7
11083	4N1156	5330-01-053-4833	59	5
11083	4N1186		25	11
11083	4N1230	5330-01-102-1794	25	2
11083	4N1235		25	30
11083	4N1292	2910-01-053-4578	28	30
11083	4N1413		17	22
11083	4N1418	5330-01-058-9177	56	18
11083	4N1419	5330-01-059-0961	56	21
11083	4N1572		29	8
11083	4N1625		13	2
11083	4N1634		29	25
11083	4N1636	5330-01-102-3261	29	26
11083	4N1650	5315-01-053-7342	3	4
11083	4N1675		24	1
11083	4N1676		24	2
11083	4N1682		4	8
11083	4N1683		4	3
11083	4N1684	5330-01-102-1807	4	4
11083	4N1706	2815-01-050-8021	2	24
11083	4N1718		12	3
11083	4N1720		25	21
11083	4N1721		14	13
11083	4N1722	5330-01-102-3259	14	12
11083	4N1751	2930-01-101-2690	60	21
11083	4N1779		4	5
11083	4N1797	2910-01-053-4585	28	27
11083	4N1799		59	14
11083	4N1807		48	16
11083	4N1848	5330-01-109-6775	38	1
11083	4N1849		38	5
11083	4N1870	5330-01-102-3260	47	14
11083	4N1911		47	24
11083	4N1913	5365-01-103-1656	48	38
11083	4N1941		60	16
11083	4N1946	5330-01-102-3264	59	4
11083	4N1948		60	10
11083	4N1951		60	1
11083	4N1956		60	13
11083	4N1981		52	1
11083	4N1985		14	4
11083	4N1998	5330-01-102-3258	14	5
11083	4N2084		2	33
11083	4N2109	2815-01-050-8022	6	13
11083	4N2184		2	32
11083	4N2198		59	31
11083	4N2199	5330-01-102-3265	59	32
11083	4N2380		59	33
11083	4N2493		39	25
11083	4N2494		39	1

CROSS-REFERENCE INDEXES

PART NUMBER INDEX

CAGEC	PART NUMBER	STOCK NUMBER	FIG.	ITEM
11083	4N2511	2910-01-021-1845	36	5
11083	4N2514	3020-01-053-7346	7	13
11083	4N2555	2910-01-053-4592	28	6
11083	4N2803	2815-01-051-2316	11	6
11083	4N3759	4730-01-053-4825	28	35
11083	4N3841	5330-01-063-9839	58	4
11083	4N3887	5365-01-097-3237	48	2
11083	4N4178		3	2
11083	4N4218	2910-00-226-8862	49	6
11083	4N4267	5360-01-053-7350	49	1
11083	4N4303		2	23
11083	4N4307	5330-01-102-1808	4	6
			45	22
11083	4N4668	2815-01-053-4853	22	12
11083	4N4696	5930-01-151-4767	73	15
11083	4N4957	2815-01-051-2334	10	7
11083	4N5270	2815-01-053-4621	18	7
11083	4N5272	2815-01-053-4622	18	6
11083	4N5609	2815-01-051-2337	12	23
11083	4N5610	2815-01-053-8007	12	32
11083	4N5611	2815-01-066-4735	12	31
11083	4N5612	2815-01-066-4736	12	19
			12	20
11083	4N5614	2815-01-051-2338	12	15
11083	4N5654	2815-01-051-2340	11	4
11083	4N5823	2910-01-051-2341	52	5
11083	4N5834	4330-01-203-1250	60	17
11083	4N5835		60	29
11083	4N5893	2815-01-051-2343	5	30
11083	4N5906	5360-01-051-2344	11	2
11083	4N5928		12	28
11083	4N5962	4720-01-053-4633	54	1
11083	4N6181		12	27
11083	4N6232		12	26
11083	4N6413		68	21
11083	4N6658	3110-01-050-8048	3	14
11083	4N6672	5330-01-102-3263	41	15
11083	4N6849		37	1
11083	4N6900		38	10
11083	4N6926		38	18
11083	4N693	5365-01-110-8004	3	25
11083	4N6970		38	17
11083	4N6971		38	7
11083	4N7082	2940-01-053-4642	21	8
11083	4N7183	5365-01-102-2468	25	6
11083	4N7253	5330-01-051-2401	5	33
11083	4N7357		33	17
11083	4N7431	4720-01-059-9327	56	38
11083	4N7437	5365-01-102-2458	32	9
11083	4N7465	5330-01-049-0553	33	3
11083	4N7498		60	2

CROSS-REFERENCE INDEXES

PART NUMBER INDEX

CAGEC	PART NUMBER	STOCK NUMBER	FIG.	ITEM
11083	4N7515		5	12
11083	4N7583		57	16
11083	4N7584		57	3
11083	4N7587		57	2
11083	4N775	5315-01-107-5310	31	15
11083	4N8112	5306-01-097-7744	50	2
11083	4N8150	5360-01-053-4656	17	5
11083	4N8225	3020-01-053-4659	68	23
11083	4N8342		25	41
11083	4N8410		17	14
11083	4N8451		59	28
11083	4N8478	5340-01-102-3539	14	16
11083	4N8596	2930-01-050-8058	61	10
11083	4N8600		19	1
11083	4N864	5330-01-107-1248	4	7
			59	38
11083	4N8647		17	9
11083	4N865	5330-01-107-3621	17	4
11083	4N8734		18	1
11083	4N8770		17	12
11083	4N8816		18	15
11083	4N898	5315-01-107-5308	48	34
11083	4N899	5315-01-107-5309	31	7
11083	4N932	5340-01-107-4472	5	25
11083	4N9372		17	21
11083	4N9431		41	17
11083	4N952	5340-01-107-5458	31	14
11083	4N9879		3	18
11083	4N9880		3	19
11083	4N9881	4710-01-184-4741	3	17
11083	4N9916	5305-01-050-8064	3	22
11083	4N9968	5340-01-103-8753	16	13
11083	4N999	2940-01-053-4680	23	10
11083	4S1988	5940-01-058-9133	42	2
			75	26
11083	4S3652	4730-01-155-5055	125	8
11083	4S4465	5305-01-097-9388	75	37
			77	31
			145	32
			163	11
			189	6
11083	4S5413		146	13
11083	4S5414	4730-01-095-0075	117	23
			125	5
			130	53
			142	9
			143	20
			143	23
			143	27
			146	21
11083	4S5838		97	9

CROSS-REFERENCE INDEXES

PART NUMBER INDEX

CAGEC	PART NUMBER	STOCK NUMBER	FIG.	ITEM
11083	4S5898	5330-00-929-5507	60	25
			97	12
11083	4S8537	2520-01-069-0806	104	19
			105	8
11083	4S8546	3110-00-248-5973	104	32
			105	5
			106	4
11083	4S8598	2940-01-028-8459	108	30
11083	4S8602		108	33
11083	4S8603	2910-01-053-8157	108	31
11083	4S8898	2815-00-116-9445	5	30
11083	4S8899	2815-00-116-9446	5	30
11083	4S8902	2815-00-114-3107	5	31
11083	4S8903	2815-00-116-9557	5	31
11083	4S9191		130	12
			131	40
			164	14
11083	4S9219	6140-00-190-9828	90	38
11083	4V0031		110	25
11083	4V0074		110	47
11083	4V0212		110	55
11083	4V2677		111	27
11083	4V2678		111	28
11083	4V2753		119	43
11083	4V301	5305-01-108-0653	160	7
11083	4V3058		110	22
11083	4V3059		110	21
11083	4V3234	5340-01-120-9453	160	6
11083	4V3317		171	22
11083	4V3318		171	23
11083	4V3527		180	23
11083	4V3672		166	1
11083	4V3710		167	5
11083	4V3713		167	8
11083	4V3714		167	59
11083	4V4002	5365-01-122-2107	160	3
11083	4V4042		92	27
11083	4V4047		165	11
11083	4V4071		161	7
11083	4V4084		167	27
11083	4V4085		167	46
11083	4V4086		165	8
11083	4V4164		172	34
11083	4V4459		167	49
11083	4V4483		147	26
11083	4V4546		161	3
11083	4V4665		162	4
11083	4V4666		164	2
11083	4V5144		163	5
11083	4V5172		162	9
11083	4V5260		130	13

CROSS-REFERENCE INDEXES

PART NUMBER INDEX

CAGEC	PART NUMBER	STOCK NUMBER	FIG.	ITEM
11083	4V5382		116	6
11083	4V5412		206	21
11083	4V6133		146	12
11083	4V6148		153	3
11083	4V6182		175	2
11083	4V6183		175	5
11083	4V6205	5930-01-102-8836	42	32
			221	38
11083	4V6293		164	10
11083	4V6323		42	10
11083	4V6569		172	64
11083	4V6570		172	59
11083	4V6571		172	72
11083	4V6574		162	10
11083	4V6604	5340-01-159-1023	167	12
11083	4V6605	5340-01-162-9915	167	16
11083	4V6607	5340-01-173-3861	167	54
11083	4V6608	5340-01-160-6907	167	50
11083	4V6797		116	16
11083	4V6954		151	16
11083	4V7024		151	29
11083	4V7055		151	68
11083	4V7056		151	12
11083	4V7193		124	30
11083	4V7208	5365-01-099-2939	167	56
11083	4V7302		166	12
11083	4V7725		129	1
11083	4V7726		129	7
11083	4V7848	5340-01-173-3721	177	7
11083	4V7849	2540-01-171-3356	179	21
11083	4V7850		179	29
11083	4V7851		179	30
11083	4V7855	2540-01-165-6000	179	28
11083	4V7857	2540-01-165-6002	179	26
11083	4V7859	2540-01-166-1171	179	24
11083	4V7860	2540-01-165-8318	179	23
11083	4V7861		179	32
11083	4V7862		179	33
11083	4V7864	5305-01-113-2264	179	31
11083	4V7865	2540-01-162-6406	178	31
11083	4V7872	5355-01-162-4050	179	53
11083	4V7878		178	32
11083	4V7879		178	33
11083	4V7880		178	34
11083	4V7881	2540-01-165-6001	179	25
11083	4V7883		178	30
11083	4V7884	3120-01-113-0639	179	9
11083	4V7885		179	52
11083	4V7886		179	11
11083	4V7889		179	57
11083	4V7890	5360-01-117-7673	179	55

CROSS-REFERENCE INDEXES

PART NUMBER INDEX

CAGEC	PART NUMBER	STOCK NUMBER	FIG.	ITEM
11083	4V7891	2540-01-165-8181	179	56
11083	4V7895	5360-01-113-0868	179	3
11083	4V7896	2540-01-162-4162	178	35
11083	4V7901	5340-01-165-5848	177	10
11083	4V7902	2540-01-158-7590	178	11
11083	4V7904		178	7
11083	4V7908		178	16
11083	4V7991		152	23
11083	4V7992		153	9
11083	4V8025		178	13
11083	4V8026	5340-01-159-4468	178	5
11083	4V8029	5340-01-172-2629	178	20
11083	4V8031	5360-01-160-2412	178	39
11083	4V8032	4010-01-169-7162	178	25
11083	4V8033	2540-01-160-1607	178	18
11083	4V8034	5306-01-114-0960	178	24
11083	4V8035	9905-01-157-1024	178	29
11083	4V8036		177	12
11083	4V8256	5360-01-163-9446	178	37
			179	27
11083	4V8257	5340-01-176-8124	179	50
11083	4V8259	2540-01-159-2990	178	9
11083	4V8261		179	35
11083	4V8264	3040-01-159-2981	179	58
11083	4V8265	3040-01-159-3593	179	5
11083	4V8270		179	49
11083	4V8370		130	5
11083	4V8554	5340-01-161-4023	179	43
11083	4V8555	5340-01-161-7575	179	6
11083	4V8556	5306-01-115-0703	179	18
11083	4V8557		179	45
11083	4V8560		179	13
11083	4V8561	5310-01-113-1309	179	41
11083	4V8562	5340-01-160-5759	179	38
11083	4V8565	2540-01-158-7559	179	48
11083	4V8566	3040-01-157-4383	179	40
11083	4V8576	5315-01-219-2487	179	14
11083	4V8577	3120-01-116-9203	179	10
11083	4V8579	5340-01-114-0214	178	10
11083	4V8580	2540-01-218-1869	179	51
11083	4V8583	2540-01-218-1868	179	17
11083	4V8586	5310-01-113-0578	178	4
11083	4V8587		178	28
11083	4V8591	2540-01-217-8134	179	15
11083	4V8605	5365-01-113-0924	178	26
11083	4V8606	3040-01-162-7517	179	12
11083	4V8609	2540-01-158-7560	179	46
11083	4V8610		179	36
11083	4V8733		123	4
11083	4V8735		123	2
11083	4V8795		123	11

CROSS-REFERENCE INDEXES

PART NUMBER INDEX

CAGEC	PART NUMBER	STOCK NUMBER	FIG.	ITEM
11083	4V8796		123	1
11083	4V8801		167	4
11083	4V8884		139	28
11083	4V8886		139	24
11083	4V9553		125	2
11083	4V9640		172	44
11083	4V9795		169	6
11083	4V9796		169	2
11083	4V9875		44	3
11083	4W1055	5330-01-184-0920	5	22
11083	4W2475	5306-00-423-8119	12	25
11083	4W5477		33	1
08179	400424	5365-01-020-5721	40	17
08179	400560-775		40	7
70210	403818		40	14
24161	4040	4720-01-146-5898	180	25
08179	404470		40	16
08179	408049-4	2950-01-175-3881	40	23
08179	408359-5		40	6
08179	408463-6		40	10
08179	408487-2		40	13
08179	408492-14		40	21
08179	408495-10		40	24
70210	408593	3120-01-020-5814	40	18
08179	408597		40	12
08179	408742-53		40	8
08179	408768-1	5365-01-118-8822	40	15
08179	408804-35		40	25
08179	408864-0		40	27
08179	408906		40	19
08179	409794		40	22
23540	412-2		163	33
79550	412026	5940-01-285-5146	76	2
			78	11
			180	4
			180	8
79550	412171		78	8
79550	413472		92	30
56620	41400	2910-01-164-7906	42	23
77445	414419	5306-00-983-0142	183	10
24161	4177-8529	4720-01-106-4290	56	36
77824	4244-0156-2		178	15
24617	426376	5310-00-042-6376	47	31
			92	65
			94	10
			110	31
			127	9
			162	1
			164	16
			167	53
			189	8

CROSS-REFERENCE INDEXES

PART NUMBER INDEX

CAGEC	PART NUMBER	STOCK NUMBER	FIG.	ITEM
24617	426376	5310-00-042-6376	191	8
			222	35
41226	4347	5310-00-209-1869	167	19
			209	56
19207	443339	5310-00-044-3339	207	2
			208	61
			209	38
07742	4458-02		197	24
07742	4458-18		197	19
07742	4459-02		197	8
07742	4459-18		197	13
11671	44916		148	38
11083	457012		199	53
			201	29
11671	46031		148	42
24161	4625-8506	4720-01-104-6442	37	8
08179	465694-5002	2950-01-267-8489	40	5
53477	4659	2640-00-678-8616	140	7
11671	47005		149	20
57733	47200	4820-00-637-2576	121	3
			124	22
			147	14
11671	47445		149	1
11671	47476		148	27
11671	47642		148	11
79470	48X4	4730-00-900-3296	185	5
11671	48150		148	6
77969	486	9390-01-118-2586	172	78
72962	49-NE-242	5310-01-036-8730	199	20
82156	49NU3212		196	3
01943	49C1-3	2590-00-490-5442	22	1
11671	49679		195	11
11671	49680		195	20
11671	49681		195	2
71741	5-10		188	10
11083	5B1866	5340-00-423-9532	12	13
11083	5B2638	5305-00-362-7336	5	7
11083	5B5812	5315-00-362-7367	61	3
11083	5B639		176	3
11083	5B9175	5365-01-102-8152	168	4
11083	5B9407	4720-00-423-1001	54	5
11083	5D0019	6220-01-059-0911	187	3
11083	5D1753	5310-01-143-0560	139	27
11083	5D2653	5310-01-102-9867	138	7
11083	5D3183	2530-00-439-9264	82	3
			83	19
11083	5D3184	5310-00-757-6194	82	2
			83	20
11083	5D353	5306-00-172-6356	167	6
11083	5D3632	3110-01-097-9616	128	43
11083	5D4204	5340-01-099-0109	130	17

CROSS-REFERENCE INDEXES

PART NUMBER INDEX

CAGEC	PART NUMBER	STOCK NUMBER	FIG.	ITEM
11083	5D6294		129	3
11083	5D6295		129	2
11083	5D6329		129	18
11083	5D6535		97	5
11083	5F0149	5365-00-182-3868	59	2
			108	23
11083	5F1678	5330-00-741-0674	134	13
11083	5F2708		45	3
11083	5F3106	5330-00-663-5709	148	1
			151	53
			195	23
11083	5F3144	5330-00-298-5837	133	15
			154	10
11083	5F4899	5306-00-897-9295	14	18
11083	5F7403	5310-00-186-0975	25	4
11083	5F7404	5310-01-112-7934	25	3
11083	5F9144	5330-00-591-3112	29	31
			144	21
3076C	5HP5N		111	32
11083	5H0837		68	3
11083	5H4744		171	20
11083	5H5012		201	40
11083	5H5672	5330-00-541-2704	60	30
11083	5H6005	5330-00-580-1227	135	16
			137	8
			221	58
11083	5H8848	5330-00-593-1247	206	40
11083	5H8853	5330-00-710-9591	102	5
			103	14
11083	5H8985	5315-01-069-0755	60	18
11083	5J0570		137	15
11083	5J0835	5365-01-246-4101	136	39
11083	5J1086	5330-01-097-6622	108	44
11083	5J1188		134	8
11083	5J1191		134	4
11083	5J3419		155	26
11083	5J3616	5330-01-098-9988	154	2
11083	5J5020	3830-00-929-8149	154	15
11083	5J5314	5305-01-053-7366	33	7
11083	5J5437		132	16
11083	5J5731	5310-00-460-8239	154	13
11083	5J5793	5306-01-051-0004	26	1
			113	18
			129	5
11083	5J5794	5305-00-465-5947	106	37
11083	5J6424		201	9
11083	5J7306		186	13
11083	5J9100	5365-01-066-7039	134	7
11083	5J9101	5365-01-138-4783	155	25
11083	5J9260		136	3
11083	5J9443	2520-01-063-0771	133	2

CROSS-REFERENCE INDEXES

PART NUMBER INDEX

CAGEC	PART NUMBER	STOCK NUMBER	FIG.	ITEM
11083	5K3559	2520-01-118-7506	122	1
11083	5K3628	5305-01-102-7345	122	16
11083	5K3661		122	12
11083	5K5959	5330-01-053-4684	59	23
11083	5K7696		128	21
11083	5K9065	5365-01-102-2467	25	26
11083	5K9107	5306-01-110-1130	167	58
11083	5K9235	4730-00-244-0606	25	42
11083	5K9660	5340-01-188-7748	203	29
11083	5L1100	3110-01-031-9372	144	3
11083	5L1761		102	1
11083	5L2127	5330-01-053-4685	17	23
11083	5L4041	5306-01-102-7320	145	5
11083	5L4504	5340-01-102-1788	22	6
11083	5L5032	5330-00-074-3771	60	28
11083	5L8854	2815-00-994-7407	39	10
11083	5L8991	5330-00-104-6565	47	37
11083	5L8992	5340-00-116-0497	47	38
11083	5M1198	5340-01-155-5280	125	9
11083	5M1822	5310-01-063-3001	44	22
			222	18
11083	5M1995		113	22
11083	5M2054	3110-00-945-8401	106	17
11083	5M2057	5330-00-855-8047	221	76
11083	5M2669	5365-00-003-6918	16	3
11083	5M2894	5310-00-117-4788	4	2
			5	3
			7	19
			13	5
			14	7
			16	15
			16	19
			17	2
			18	14
			18	19
			19	5
			21	2
			22	3
			23	5
			24	5
			25	16
			28	19
			32	14
			34	15
			35	2
			37	19
			38	20
			39	17
			41	11
			45	23
			53	4

CROSS-REFERENCE INDEXES

PART NUMBER INDEX

CAGEC	PART NUMBER	STOCK NUMBER	FIG.	ITEM
11083	5M2894	5310-00-117-4788	54	4
			56	17
			57	6
			59	39
			61	24
			62	6
			64	9
			65	7
			66	1
			67	13
			68	15
			73	4
			82	14
			90	9
			95	22
			98	47
			101	5
			106	2
			108	40
			114	5
			116	3
			122	36
			124	5
			130	2
			131	1
			143	10
			152	2
			167	33
			169	27
			172	67
			184	3
			196	20
			199	28
			202	22
			204	4
			217	7
			0008	8
11083	5M3062	5306-00-158-0697	178	6
			178	6
11083	5M3320	3120-00-948-9964	113	9
11083	5M3469		202	50
11083	5M5693	5310-01-120-5540	187	13
11083	5M6126	3110-00-239-7702	105	12
11083	5M6187	5330-00-948-8440	105	38
11083	5M6214	4730-00-924-7886	5	15
			29	30
			32	2
			34	25
			47	19
			56	8
			59	17

CROSS-REFERENCE INDEXES

PART NUMBER INDEX

CAGEC	PART NUMBER	STOCK NUMBER	FIG.	ITEM
11083	5M6214	4730-00-924-7886	60	14
			64	1
			66	15
			102	12
			112	2
11083	5M6228	3120-00-237-6951	46	9
11083	5M6668	5305-00-005-0896	75	18
			83	6
			84	10
			87	4
			87	10
			87	16
			87	22
			189	18
11083	5M6708	5310-00-739-9977	133	5
11083	5M7925	3110-00-971-4765	104	13
11083	5M8032		84	11
11083	5M9548	5360-00-932-0761	96	10
11083	5M9622	5365-00-762-6106	96	15
			103	27
11083	5M9623	5310-00-948-3280	96	14
			103	28
11083	5M9624	2520-00-949-1439	96	13
			103	29
11083	5M9735	5330-00-950-8223	64	20
11083	5P0035		146	19
11083	5P0078		117	51
11083	5P0144		223	3
11083	5P0189	4710-01-062-3719	61	31
11083	5P0190		142	2
11083	5P0537	5310-01-051-2360	29	24
			34	3
			36	3
			47	32
			94	16
			110	26
			162	6
			167	13
11083	5P0546		105	33
11083	5P0598	5340-01-026-9553	56	35
			206	7
11083	5P0750		221	61
11083	5P0765		168	16
11083	5P0878		191	17
			BULK	12
11083	5P1075	5310-01-094-8810	44	7
			77	17
			81	10
			83	8
			89	2
			110	17

CROSS-REFERENCE INDEXES

PART NUMBER INDEX

CAGEC	PART NUMBER	STOCK NUMBER	FIG.	ITEM
11083	5P1075	5310-01-094-8810	139	2
			163	15
			170	5
			177	17
			187	15
			203	18
			204	14
11083	5P1076	5310-01-097-6720	65	54
			89	8
			117	36
			151	28
			151	46
			160	8
			161	2
			162	14
			165	1
			165	12
			167	1
			168	10
			205	22
			205	34
11083	5P1370		25	5
11083	5P1475	5940-01-303-4978	73	13
			74	3
			76	1
			78	10
			82	17
			85	3
			92	4
			92	31
			93	9
11083	5P1477	5940-01-101-2456	78	12
			85	2
			93	11
			172	4
11083	5P1713	5330-01-053-4686	60	3
11083	5P1717	4730-01-184-4274	206	64
11083	5P1778	5307-01-102-7426	159	13
11083	5P178	4720-01-066-4587	BULK	4
11083	5P179	4720-00-198-5808	BULK	10
11083	5P180		BULK	8
11083	5P181		65	34
			BULK	2
11083	5P182	4720-01-062-5930	19	11
			19	16
			BULK	1
11083	5P1836		203	20
			203	28
			BULK	13
11083	5P191		214	10
			215	10

CROSS-REFERENCE INDEXES

PART NUMBER INDEX

CAGEC	PART NUMBER	STOCK NUMBER	FIG.	ITEM
11083	5P191		BULK	24
			0124	10
			0125	10
11083	5P2060	5330-01-069-4803	28	37
11083	5P2094	4720-01-026-9540	65	33
11083	5P2298		197	3
11083	5P2395		223	18
11083	5P2400		223	16
11083	5P2405		223	13
11083	5P2408		223	14
11083	5P2523		122	19
11083	5P2525		122	20
			147	21
11083	5P2526	3110-00-100-0612	122	7
11083	5P2587	5330-01-097-6621	100	12
			108	13
11083	5P2685		223	15
11083	5P3092	5330-01-102-8391	221	26
11083	5P3160	5935-01-118-8884	74	7
			93	19
11083	5P3175	5935-01-119-1467	74	10
			80	5
11083	5P3228	5330-01-102-3522	221	32
11083	5P3229		151	61
11083	5P3345	5305-01-107-3550	38	14
11083	5P3418	3110-01-099-8007	69	19
11083	5P3419	3110-01-098-0000	69	20
11083	5P3422		185	17
11083	5P3466		206	33
11083	5P3479	5307-01-097-9521	160	10
11083	5P3741	4730-00-307-6426	185	13
11083	5P3841		178	14
11083	5P3860	4730-01-066-8597	39	2
11083	5P396		BULK	21
11083	5P419	4730-01-106-6789	143	38
11083	5P4278		71	6
11083	5P4479		25	20
11083	5P4482		111	18
11083	5P4515	6145-01-276-7544	BULK	17
11083	5P4517	6145-01-276-7545	BULK	18
11083	5P4571	5940-01-058-9112	75	27
			76	4
			78	9
11083	5P4691	5305-01-097-9391	174	14
11083	5P4858		128	7
11083	5P4887		44	28
11083	5P5303		143	35
11083	5P5601	5330-01-102-8390	48	14
11083	5P5623	6145-00-347-1171	BULK	14
11083	5P5678	5330-01-069-5128	10	1
11083	5P5694	5940-01-103-6808	76	5

CROSS-REFERENCE INDEXES

PART NUMBER INDEX

CAGEC	PART NUMBER	STOCK NUMBER	FIG.	ITEM
11083	5P5768	5330-01-128-8991	172	55
11083	5P5902		75	3
			77	4
			171	9
11083	5P6095		174	16
11083	5P6096		174	5
11083	5P6120		163	10
11083	5P6217		223	10
11083	5P6218		223	9
11083	5P6229		223	2
11083	5P63	5340-01-108-8855	5	24
11083	5P641		BULK	20
11083	5P643		BULK	16
11083	5P6438	5340-01-157-5981	222	19
11083	5P648		BULK	22
11083	5P6599		223	12
11083	5P6601		223	17
11083	5P6624	4720-01-018-6551	BULK	7
11083	5P6629	5325-01-098-6305	82	12
11083	5P6652	5310-01-094-9906	168	2
11083	5P6670	7690-01-180-0919	190	11
11083	5P668	6145-01-128-1623	42	3
11083	5P6725		71	9
11083	5P674		BULK	19
11083	5P680		BULK	23
11083	5P7030	6145-01-129-5953	42	5
11083	5P7086		79	9
11083	5P7111		172	37
			174	18
			177	11
11083	5P7128	5305-01-107-3549	40	4
11083	5P713	5330-01-112-7956	97	13
11083	5P7139		172	80
11083	5P7213	5310-01-102-9866	120	5
11083	5P7312		223	7
11083	5P7314		223	6
11083	5P740		BULK	11
11083	5P7433		223	11
11083	5P7533		130	81
11083	5P7849		173	11
11083	5P796	5330-01-069-4801	46	2
11083	5P7979	5306-01-107-5159	61	17
11083	5P8057	5330-01-070-5411	KIT	
11083	5P8244	5310-01-097-8955	19	20
			65	2
			95	15
			117	4
			130	57
			152	29
			217	10
11083	5P8245	5310-01-098-0624	95	11

CROSS-REFERENCE INDEXES

PART NUMBER INDEX

CAGEC	PART NUMBER	STOCK NUMBER	FIG.	ITEM
11083	5P8245	5310-01-098-0624	117	27
			151	2
			153	8
			153	15
			162	22
			169	9
			170	13
			206	52
			217	3
11083	5P8247	5310-01-095-4631	2	14
			108	11
			169	11
			199	47
11083	5P8248	5310-01-102-2477	2	11
			2	19
			2	31
			140	16
			154	17
			168	5
			176	4
			199	58
			201	4
11083	5P8939	5325-01-098-6306	82	13
11083	5P8945	5306-01-161-5500	177	4
11083	5P9294	5330-01-102-3252	33	16
11083	5P9295	5330-01-102-8388	33	8
			33	15
11083	5P9506		98	40
11083	5P9513		117	31
11083	5P9697		223	8
11083	5P9757	5330-01-102-4354	48	18
11083	5P9769		147	20
11083	5P9843	5330-01-128-6817	KIT	
11083	5P9972	5330-01-129-0805	KIT	
11083	5P9973		203	8
11083	5R3711		166	5
11083	5R3731		159	4
11083	5R3784		206	50
11083	5R3816		204	8
11083	5R4299	6140-01-222-5548	90	32
			90	34
11083	5R4346		217	1
11083	5R4348		217	4
11083	5R4349		117	18
			118	1
			0118	1
11083	5R4356		118	12
11083	5R4357		222	27
11083	5R4358		97	1
11083	5R4368		222	33
11083	5R4372	5330-01-104-4565	222	31

CROSS-REFERENCE INDEXES

PART NUMBER INDEX

CAGEC	PART NUMBER	STOCK NUMBER	FIG.	ITEM
11083	5R4377		222	39
11083	5R4384	5306-01-099-1624	118	3
11083	5R4385		118	20
11083	5R4386		118	6
11083	5R4388		222	5
11083	5R4389		222	8
11083	5R4391		54	9
11083	5R4392		54	10
11083	5R4400		222	28
11083	5R4401		222	25
11083	5R4405		222	30
11083	5R4406		161	16
11083	5R4407		163	2
11083	5R4411		25	33
11083	5R4415		166	4
11083	5R4416		166	13
11083	5R4424		160	2
11083	5R4428		206	63
11083	5R4436		163	46
11083	5R4438		40	1
11083	5R4439		163	1
11083	5R4446		163	27
11083	5R4454		163	45
11083	5R4456		65	52
11083	5R4468		90	25
11083	5R4469		206	73
11083	5R4472		167	36
11083	5R4475		163	32
11083	5R4477		195	1
11083	5R4480		65	55
11083	5R4483		183	8
11083	5R4486		206	8
11083	5R4490		83	13
11083	5R4492		83	17
11083	5R4497		206	54
11083	5R4501		206	57
11083	5R4503		81	25
11083	5R4505		218	1
11083	5R4506		218	2
			218	2
11083	5R4507		219	1
11083	5R4508		204	25
11083	5R4511		205	1
11083	5R4512		205	12
11083	5R4513		203	25
11083	5R4514		203	35
11083	5R4515		203	19
11083	5R4516		203	1
11083	5R4517		204	4
11083	5R4518		206	36
11083	5R4519		206	30

CROSS-REFERENCE INDEXES

PART NUMBER INDEX

CAGEC	PART NUMBER	STOCK NUMBER	FIG.	ITEM
11083	5R4520		81	1
11083	5R4523		206	17
11083	5R4524	6150-01-207-8050	90	14
11083	5R4525	6150-01-214-5751	90	15
11083	5R4527		182	4
11083	5R4528		183	1
11083	5R4530		182	1
11083	5R4532		204	10
11083	5R4536	2815-01-109-4374	1	
			1	1
11083	5R4543	2590-01-222-5496	91	1
11083	5R4544		91	10
11083	5R4545		203	9
11083	5R4549		81	18
11083	5R4550		81	14
11083	5R4551		81	26
11083	5R4552		80	1
11083	5R4553	5330-01-133-0568	KIT	
11083	5R4555		205	21
11083	5R4557	4710-01-243-0093	204	16
11083	5R4558		77	1
11083	5R4562		73	11
11083	5R4563		205	24
11083	5R4564		205	25
11083	5R4565		205	29
11083	5R4566		205	28
11083	5R4567		205	26
11083	5R4568		205	27
11083	5R4569	2590-01-222-5494	93	1
11083	5R457		219	1
11083	5R4570		74	1
11083	5R4586		161	17
11083	5R4587		161	18
11083	5R4610	5910-01-176-8877	94	7
11083	5R4686	2590-01-160-3599	94	12
11083	5R4687		94	19
11083	5R4688		94	11
11083	5R4689		94	14
11083	5R4690	2590-01-184-4151	94	2
11083	5R4691	2590-01-184-4150	94	6
11083	5S0085		124	31
11083	5S0928		97	16
11083	5S1211	5340-00-246-2746	56	4
11083	5S1213	2930-00-930-9098	56	3
11083	5S1218	6620-00-912-9151	56	7
11083	5S2106	5330-00-498-2905	61	20
11083	5S2389		158	20
11083	5S3049		65	61
			130	90
11083	5S3676	5330-01-060-0745	122	38
11083	5S3777	4730-01-066-4773	117	46

CROSS-REFERENCE INDEXES

PART NUMBER INDEX

CAGEC	PART NUMBER	STOCK NUMBER	FIG.	ITEM
11083	5S3777	4730-01-066-4773	152	34
			153	18
11083	5S3778		206	76
11083	5S3779	4730-01-062-5932	117	33
			0117	38
11083	5S3826		19	14
11083	5S4629	5330-00-931-8011	56	2
11083	5S5080	5306-00-458-1930	56	5
11083	5S5283	4730-01-062-5933	131	31
11083	5S5287		130	89
11083	5S581	5310-01-113-1308	42	8
			220	6
11083	5S6622	5330-00-929-5514	113	10
11083	5S7816	2520-01-059-9409	103	32
11083	5S8558	5307-01-097-8995	180	22
			182	12
11083	5S9062	5365-00-498-2920	61	21
11083	5S927	4320-00-932-0782	97	18
11083	5V1019		153	16
11083	5V1279		43	8
11083	5V1303		114	11
11083	5V1493		178	21
11083	5V1698		111	24
11083	5V1884		114	1
11083	5V2993		176	1
11083	5V2994		176	1
11083	5V3768		77	5
11083	5V3832		92	37
11083	5V3837		114	3
11083	5V3839		167	29
11083	5V3845		167	28
11083	5V3994		92	3
11083	5V4041	2590-01-222-5495	92	19
11083	5V4846	5340-01-172-6320	179	16
11083	5V4855	5307-01-115-0811	179	7
11083	5V4861		179	1
11083	5V5232		178	36
11083	5V5233	3040-01-159-0918	179	2
11083	5V5294		172	65
11083	5V5734		152	1
11083	5V5802		153	21
11083	5V5856		128	3
11083	5V5926		186	1
11083	5V6019		168	26
11083	5V6103	5365-01-102-8151	161	30
11083	5V625	5306-01-108-2510	90	42
11083	5V6446		167	47
11083	5V6447		167	43
11083	5V6834		93	23
11083	5V8927	2640-01-144-1573	140	3
11083	5V8962		172	70

CROSS-REFERENCE INDEXES

PART NUMBER INDEX

CAGEC	PART NUMBER	STOCK NUMBER	FIG.	ITEM
11083	5V8964		85	1
11083	5V8999		BULK	3
11083	5V965	5330-01-107-5188	88	11
79136	5008-100	5365-00-285-7124	40	20
28882	50168	5340-00-162-5243	173	17
44940	502-0153	4730-00-011-2578	38	6
28882	50201		173	2
89346	50410DA	4730-00-044-4688	3	28
70412	50957	5306-01-062-7129	183	18
79136	5100-287MD	5365-00-252-4689	106	13
79136	5100-354	5365-00-820-5964	199	66
57931	5100-37	5365-00-715-1152	145	16
79136	5100-75MD	5365-00-803-7303	115	11
79136	5102-100MD	5365-00-252-7746	146	6
96151	5126	3040-00-124-0880	144	14
79136	5133-25MD	5365-00-721-7680	174	11
79136	5133-37	5365-00-256-2465	44	21
72619	52-3191-003	6210-01-200-0788	75	36
72619	52-3192-003	6210-00-941-5863	75	6
			75	28
72619	52-3193-003	6210-01-097-1973	77	21
11083	523380		207	18
08129	523560950		140	11
70082	5257		184	7
70082	5258		184	7
70082	5259		184	5
70082	5260		184	5
70082	5261		184	9
70082	5262		184	9
77060	5297062	5999-01-119-4109	78	6
11083	531426	5305-01-102-1824	199	69
00779	53245-1	5940-01-087-0285	74	2
52555	5361-1		207	54
11083	536222		204	19
52555	536631		202	3
11083	537156		202	7
11083	537494		197	18
11083	537495		197	7
11083	537554		201	11
11083	537557		197	15
11083	537564		201	15
11083	537606		201	24
11083	537615		201	1
11083	537616		201	12
11083	537631		201	25
11083	537636		198	2
11083	537637		198	1
11083	537663		196	8
11083	537664		196	1
11083	537665	3040-01-242-6414	196	2
11083	537668		201	20

CROSS-REFERENCE INDEXES

PART NUMBER INDEX

CAGEC	PART NUMBER	STOCK NUMBER	FIG.	ITEM
11083	537698		201	5
11083	537699		201	10
11083	537700		201	7
11083	537703		201	21
11083	537704		201	23
11083	537741	3040-01-311-6861	200	1
11083	537754		199	37
11083	537755		199	34
11083	537756		199	35
11083	537763		199	38
11083	537765		197	1
11083	537790		201	2
11083	538127		202	38
11083	538128		202	25
11083	538129		202	13
11083	538151		202	29
11083	538152		202	44
11083	538257		201	22
11083	538336		201	17
11083	538337		201	18
11083	538338		201	19
11083	538397		197	22
96151	5389-10		144	17
19207	539023	5307-00-053-9023	39	20
17335	5404-6-4		73	9
86579	55-028-19009		149	12
86579	55-156-19009		149	3
86579	55-157-19009		148	16
86579	55-252-17007		148	37
28882	55016	5310-01-109-5388	173	9
03039	56-3331-2096		110	24
03039	56-3331-2111		110	49
70040	5622759	2910-00-033-2200	33	22
			51	6
79136	58-A5000-112		148	22
00779	583301-1		76	8
00779	583362-3	5999-01-119-5999	76	7
12662	5854-016	6220-00-295-2860	86	1
30655	59-077-375-3500		199	7
21340	590030		172	20
52555	5920-1		207	50
			209	46
53744	5934		133	8
73331	5937085		83	3
		6220-01-037-5622	87	14
			87	20
73331	5937086	6220-01-148-7953	87	2
			87	8
73331	5949719	6220-00-756-8787	83	5
			87	5
			87	11

CROSS-REFERENCE INDEXES

PART NUMBER INDEX

CAGEC	PART NUMBER	STOCK NUMBER	FIG.	ITEM
73331	5949719	6220-00-756-8787	87	17
			87	23
53711	5979393-1	5305-01-256-8504	40	11
			45	4
			94	8
11083	6A3626	6145-01-229-2077	71	8
			71	10
11083	6A3770		BULK	15
11083	6A7454		205	5
11083	6B0689	4730-00-809-8818	168	7
			197	5
11083	6B1124	3110-00-144-8518	64	13
11083	6B1557	5306-00-281-5130	101	4
11083	6B3224	3110-00-100-0305	107	7
11083	6B7469	5365-01-063-0778	168	36
11083	6B933	5365-00-423-9981	167	34
			186	22
30780	6CBTXS		67	5
11083	6D1641	5340-01-064-7512	186	20
11083	6D2256	5365-01-059-0914	82	1
			87	26
11083	6D3787	3110-01-168-1053	132	28
11083	6D47	5310-01-130-4273	179	20
11083	6D7690	3110-00-618-0249	108	69
			147	10
11083	6F0156	5365-00-374-1400	104	36
11083	6F0253	5310-01-066-0499	146	2
			187	18
11083	6F4868	5330-00-297-6548	108	36
11083	6F5559	5330-00-580-1215	137	30
			221	3
11083	6F6672	5330-00-310-6575	135	8
11083	6F6673	5330-00-865-0404	103	11
11083	6F7012	5307-00-426-3581	13	7
			14	14
11083	6F7027	5306-00-263-8981	182	3
11083	6F7045	5310-00-833-9298	90	19
11083	6F7062	5310-00-362-7588	112	5
30780	6HP5N		150	11
11083	6H1717	5306-00-874-4001	126	26
			142	14
			161	29
			161	31
			170	11
			206	42
11083	6H3956	5315-00-586-5103	221	13
11083	6H3977	5330-00-741-2096	150	7
11083	6H5430		75	22
			77	14
11083	6H7127	3120-01-102-7939	203	30
11083	6J0428		157	6

CROSS-REFERENCE INDEXES

PART NUMBER INDEX

CAGEC	PART NUMBER	STOCK NUMBER	FIG.	ITEM
11083	6J1080	5325-01-062-6128	221	56
11083	6J1081	9340-01-062-6129	221	55
11083	6J1311	5315-00-246-0998	136	8
11083	6J1551	5305-01-121-1667	170	9
11083	6J2419	5330-00-494-2763	33	10
			111	31
11083	6J366	2520-01-063-0781	133	6
11083	6J3913	5306-01-108-3740	2	2
11083	6J4081	5305-01-102-7951	166	6
11083	6J4608	5305-01-097-9884	156	9
11083	6J463	2530-01-105-2649	156	15
11083	6J6721	5305-01-102-7342	106	3
11083	6J7363		136	15
11083	6J9354	5330-00-034-2335	133	12
11083	6J9684		136	41
11083	6K0806	4730-01-068-6077	90	5
11083	6K0884	5330-01-097-8235	119	6
			119	32
11083	6K0885	3040-01-102-4166	119	5
			119	31
11083	6K1330	5306-01-053-8047	161	4
11083	6K1827		71	11
			88	3
11083	6K1828		71	7
		5935-01-097-7239	92	5
11083	6K3317		116	13
11083	6K3607	4730-00-450-3480	43	5
			205	6
11083	6K5177	5355-01-028-1354	110	2
11083	6K5499		183	6
11083	6K5535		65	43
11083	6K5536		65	44
11083	6K6383	6150-01-299-4514	93	24
11083	6K8077	2940-01-053-4692	23	7
11083	6K8178	5340-01-103-3664	90	7
11083	6K8420		203	16
11083	6K9194	4730-01-051-8745	132	46
11083	6K9800	5365-01-097-9642	42	37
			169	19
			220	11
11083	6L1651	5330-00-122-9656	17	7
			196	7
11083	6L1756	5306-00-118-3052	47	47
11083	6L2479		45	10
11083	6L3351	5340-00-413-4384	130	48
11083	6L3616	4730-01-068-6081	61	27
11083	6L4428	5307-01-102-7126	3	29
11083	6L5567	5330-00-431-7364	221	67
11083	6L5766	5330-00-105-0356	50	12
11083	6L5897	5305-01-107-4621	29	42
11083	6M1560		124	35

CROSS-REFERENCE INDEXES

PART NUMBER INDEX

CAGEC	PART NUMBER	STOCK NUMBER	FIG.	ITEM
11083	6M1592		124	9
			124	33
11083	6M1601		124	4
11083	6M1605		124	32
11083	6M1606		124	8
11083	6M1622		121	6
			124	34
11083	6M2001	5305-01-105-1805	166	11
11083	6M6853	4730-01-155-5059	132	48
11083	6M7476		41	13
11083	6M8252		129	8
11083	6M9155		129	9
11083	6N0008		59	1
11083	6N0024		30	11
11083	6N0414		57	20
11083	6N0493	2910-01-066-4742	26	4
11083	6N0513	5360-01-068-0037	50	14
11083	6N0515	5360-01-068-0038	50	24
11083	6N0593		50	29
11083	6N0651	2910-01-182-7836	50	8
11083	6N0676		77	29
11083	6N0953		51	5
11083	6N0966		2	9
11083	6N1044	2910-01-184-7087	51	1
11083	6N1045	2910-01-053-4695	51	4
11083	6N1069		33	4
11083	6N1202		23	8
11083	6N1247		22	7
11083	6N1249		23	13
11083	6N1251		23	12
11083	6N1277	5340-01-102-7936	28	26
11083	6N1410		59	18
11083	6N1411		59	27
11083	6N1412		59	24
11083	6N1413		59	26
11083	6N1432		3	21
11083	6N1433		3	20
11083	6N1519		37	9
11083	6N1565		38	15
11083	6N1671		35	3
11083	6N1931	2815-01-053-4700	18	17
11083	6N1947		48	15
11083	6N2194		59	10
11083	6N2327		14	2
11083	6N2438		10	5
11083	6N2501		48	26
11083	6N2508	5330-01-102-3257	14	20
11083	6N2509		14	21
11083	6N2522		10	3
11083	6N2523		26	8
11083	6N2533		26	9

CROSS-REFERENCE INDEXES

PART NUMBER INDEX

CAGEC	PART NUMBER	STOCK NUMBER	FIG.	ITEM
11083	6N2751	5340-01-102-7938	28	11
11083	6N2754	5340-01-102-7937	28	15
11083	6N2944	5325-01-102-1842	28	9
11083	6N3169	4720-01-243-0871	50	6
11083	6N3175	5315-01-102-3437	48	32
11083	6N3199		29	13
11083	6N3504	5340-01-066-4744	47	12
11083	6N3641	3020-01-243-1044	64	11
11083	6N3765		64	22
11083	6N3766		64	24
11083	6N3927	3120-01-102-1820	26	2
11083	6N4111		61	26
11083	6N4165		29	38
11083	6N4241	5306-01-297-1055	71	5
11083	6N4247		39	15
11083	6N4248		39	19
11083	6N4249		39	14
11083	6N4414	2910-01-178-9971	34	5
11083	6N4587		12	30
11083	6N4588		12	29
11083	6N4597	2990-01-298-5358	38	9
11083	6N4651		38	8
11083	6N4728		41	9
11083	6N4941	5330-01-102-1813	57	22
11083	6N4942	5330-01-102-3266	57	8
11083	6N5156		26	5
11083	6N5269		61	2
11083	6N5270		61	1
11083	6N5300		63	2
11083	6N5339		62	2
11083	6N5440		56	43
11083	6N5442		56	20
11083	6N5453		34	13
11083	6N5454		34	20
11083	6N5455		34	22
11083	6N5485		57	10
11083	6N5634		57	18
11083	6N5635		56	41
11083	6N5636	2930-01-303-5756	56	40
11083	6N5639		57	19
11083	6N5673		9	1
11083	6N5674		9	2
11083	6N5675		61	29
11083	6N5897		5	13
11083	6N5899	5930-01-101-7845	73	20
11083	6N6013		2	28
11083	6N608	2910-01-104-5200	28	41
11083	6N6143		17	29
11083	6N6209		50	1
11083	6N6731		5	8
11083	6N6732		5	14

CROSS-REFERENCE INDEXES

PART NUMBER INDEX

CAGEC	PART NUMBER	STOCK NUMBER	FIG.	ITEM
11083	6N6872	2815-01-066-4748	12	24
11083	6N6955	5315-01-102-3438	29	4
11083	6N7053	3030-01-118-7494	61	22
11083	6N7142		13	1
11083	6N7145		59	3
11083	6N7148		50	11
11083	6N7174	2815-01-193-4649	11	9
11083	6N7266		31	4
11083	6N7436		8	11
11083	6N7695		29	41
11083	6N7827		30	6
11083	6N7828		30	5
11083	6N7829	2910-01-184-4574	30	1
11083	6N8195		48	11
11083	6N8441		31	11
11083	6N8629	5340-01-071-2545	48	3
11083	6N8743	3120-01-069-2667	6	2
11083	6N8780		47	17
11083	6N8783		48	39
11083	6N8793		47	58
11083	6N8856	2520-01-067-7978	20	2
11083	6N8863	5310-01-098-0625	114	15
			167	44
11083	6N8942		8	8
11083	6N9040		47	16
11083	6N9055	2815-01-135-7514	16	17
11083	6N9133		3	1
11083	6N9255	4720-01-101-2715	56	32
11083	6N9256	4720-01-101-7196	56	29
11083	6N9312	5330-01-097-8142	60	22
11083	6N9364		68	16
11083	6N9365		2	25
11083	6N9366		68	13
11083	6N9587	5940-01-097-3578	74	4
			80	6
11083	6N9590	5365-01-102-2459	56	25
11083	6N9775		57	7
11083	6N9976		5	28
11083	6N9978	2815-01-104-0831	5	27
11083	6P0384		98	33
11083	6P1272		113	12
11083	6P1285	5330-01-062-7164	194	10
11083	6P1286	5330-01-062-7165	194	2
11083	6P1296	5330-01-062-7170	191	11
11083	6P1298	2540-01-062-7171	191	18
11083	6P1301	5325-01-062-7172	191	15
11083	6P1316	2540-01-063-0802	189	19
11083	6P1319	2540-01-063-0804	194	12
11083	6P1543		105	41
11083	6P2016		189	1
11083	6P2923	3010-01-096-9250	108	48

CROSS-REFERENCE INDEXES

PART NUMBER INDEX

CAGEC	PART NUMBER	STOCK NUMBER	FIG.	ITEM
11083	6P3153		105	7
11083	6P3236	5930-01-181-0054	189	15
11083	6P4227		115	12
11083	6P4354		113	21
11083	6P4498		102	11
11083	6P4499		102	10
11083	6P4501		102	8
11083	6P4603		115	1
11083	6P4903		108	24
11083	6P4904		108	27
11083	6P4935		103	16
11083	6P4938	5340-01-155-4484	103	12
11083	6P4939		103	30
11083	6P4940	5365-01-160-4614	103	17
11083	6P4943	2520-01-102-1583	103	31
11083	6P4947		108	41
11083	6P4969		102	6
11083	6P4971	4820-01-152-5578	103	43
11083	6P4973	5330-01-097-9428	102	4
11083	6P4975	4730-01-097-4727	101	10
11083	6P4977	5365-01-099-8160	101	3
11083	6P4978	5360-01-098-1867	103	33
11083	6P4979		101	7
11083	6P5139		101	1
11083	6P5141		102	3
11083	6P5285	2540-01-063-0805	189	12
11083	6P5443		92	8
11083	6P5554		105	6
11083	6P5724	5340-01-102-7660	106	19
11083	6P5725		106	9
11083	6P5751		106	54
11083	6P5752		106	42
11083	6P6241		98	36
11083	6P6566		172	63
11083	6P6567		172	69
11083	6P7379		106	40
11083	6P7392		104	33
11083	6P8339	5340-01-104-8659	97	25
11083	6P8340		97	27
11083	6P8528		118	10
11083	6P9783	5360-01-097-9194	103	37
11083	6P9784	5360-01-098-1871	103	36
11083	6P9785	5360-01-098-0284	103	39
11083	6P9786	1650-01-153-1633	103	38
11083	6S5992	5340-01-102-1790	53	5
C88C5	6S6-24V	6240-00-143-7513	81	7
11083	6S7116		78	2
11083	6S7251		202	47
11083	6T7799	3120-01-186-1302	106	16
11083	6V220	5330-01-147-4999	KIT	
11083	6V230	5330-01-129-0803	KIT	

CROSS-REFERENCE INDEXES

PART NUMBER INDEX

CAGEC	PART NUMBER	STOCK NUMBER	FIG.	ITEM
11083	6V236	5330-01-129-0804	KIT	
11083	6V241	5330-01-128-6818	KIT	
11083	6V2978	5330-01-142-7005	KIT	
11083	6V5121	5330-01-053-7320	3	8
11083	6V5699	5307-01-296-7755	5	21
20680	6028	5306-01-051-7598	159	11
12603	61D8	5310-00-768-0318	171	7
			217	12
28882	61001	2590-00-114-4151	173	19
82402	6147822	5340-00-188-0471	163	31
11083	614809		199	5
			199	49
			201	32
11083	616685		200	14
11083	616740		43	23
11083	617916		199	67
11083	617994		200	15
11083	618146	5330-01-120-9944	196	11
11083	618820		200	13
11083	618827		203	14
11083	619258	4730-01-200-8433	0038	38
11671	620-8-50HG8		148	40
86809	620059		177	14
11083	62325		186	11
94988	625	5945-00-853-2063	75	8
19207	6259613	5310-00-629-9613	98	45
			116	11
			119	10
			119	33
			120	7
			150	3
			151	25
			169	23
22031	6400-6-4	4730-01-062-9928	130	55
11083	640109		197	14
28882	64047		173	7
28882	64203	9390-01-118-5082	173	4
11083	646059	5365-01-121-2073	196	21
11083	646147		199	65
11083	646266		199	50
			201	33
11083	646271		199	48
			201	31
11083	646272		199	51
			201	30
11083	646370		199	4
11083	646371		199	6
70040	6464421	6620-01-100-0431	77	28
70040	6464584	6620-01-098-9865	73	1
70040	6464585	6620-01-098-9866	73	7
11083	649917		200	18

CROSS-REFERENCE INDEXES

PART NUMBER INDEX

CAGEC	PART NUMBER	STOCK NUMBER	FIG.	ITEM
11083	649918		200	17
11671	65-6BP		149	19
11083	657804		199	43
			201	43
11083	657806		199	64
11083	657809		199	62
11083	657812		199	61
11083	657833		196	23
11083	657927		199	55
			201	39
11083	657955		199	63
11083	657978	5330-01-121-2763	196	13
11083	659454	3930-00-964-8770	196	5
53930	660542		203	15
11083	663573		199	44
24617	664288	5310-00-698-4460	44	2
11083	664351		199	24
11083	664352		199	22
11083	664354		199	57
11083	665736		196	24
11083	665808		196	17
11083	665947		196	12
81321	6663836	2910-00-989-3388	51	8
27783	670A-198	2640-00-995-3138	140	4
11083	670407		196	22
11083	670902		196	6
73782	671885		81	2
73782	671894		81	9
11083	673144		199	68
11083	673145	5365-01-247-6875	199	70
11083	673146		201	27
11083	673147		201	28
11083	673148		201	34
11083	673159		199	54
11083	673160		199	52
11083	674602		202	30
11083	678890		202	28
11083	680592	9905-01-174-0961	202	32
11083	680593		202	33
11083	680594		202	17
11083	680595		202	18
11083	680596		202	19
11083	680597		202	20
62983	680702		219	29
79470	681X2	4730-00-289-1243	53	10
11083	682121	5305-01-113-9768	155	20
11083	683235		222	3
11083	684174		203	6
11083	685107		202	4
17875	6862	5340-00-598-9577	144	19
11083	688273		199	31

CROSS-REFERENCE INDEXES

PART NUMBER INDEX

CAGEC	PART NUMBER	STOCK NUMBER	FIG.	ITEM
11083	688293		199	12
11083	688340		196	4
11083	688358		202	23
11083	688438		28	20
11083	689478		199	19
96151	6901-3	5310-01-097-5847	144	15
11083	690256		197	12
			197	20
11083	690320		199	9
11083	690321		199	2
52555	6904-1		207	35
11083	690478		197	2
11083	690644		199	10
11083	690658		199	18
11083	691262		197	9
			197	23
52555	6915-1		207	3
11083	692306		197	4
11083	693256		197	25
11083	694448		218	32
11083	694531		197	11
			197	21
56161	6945407	4730-00-710-5571	131	24
11083	695039		199	30
11083	695257		199	11
11083	695688		174	4
11083	695939		199	3
11083	695940		199	1
11083	696013		199	41
			201	41
11083	696014		199	42
			201	42
11083	696059		201	26
11083	696456		202	10
71741	7-40		188	8
11083	7B2805	5365-00-950-8280	221	24
11083	7B3028	5305-00-708-3823	96	2
			108	25
			118	5
			155	28
			157	4
11083	7B3039	5360-00-597-8341	221	73
11083	7B3235	5306-00-424-0086	95	24
			97	20
			108	46
			116	8
			128	35
			153	23
			159	7
			160	9
			171	16

CROSS-REFERENCE INDEXES

PART NUMBER INDEX

CAGEC	PART NUMBER	STOCK NUMBER	FIG.	ITEM
11083	7B3235	5306-00-424-0086	206	39
11083	7B4448	5930-00-363-6599	131	6
11083	7B5163	5306-00-426-5835	199	59
11083	7B6368	3110-00-731-1593	136	42
11083	7B8194	5360-00-597-4697	156	7
11083	7B8364	5305-01-104-4845	169	5
11083	7B8791	5306-01-119-1758	199	39
11083	7D0874		142	13
11083	7D1533		114	10
11083	7D1649	5310-01-095-1249	161	27
			167	42
11083	7D1728	5340-01-102-1789	61	28
11083	7D3493		0206	5
11083	7D4512		139	17
11083	7D4593		0206	5
11083	7D5272	5310-01-102-7961	180	17
			182	6
11083	7D7504		129	19
11083	7D8368		206	6
11083	7D8936	6685-01-107-7540	73	14
11083	7F2122	5330-00-931-2219	59	29
			106	36
			108	51
11083	7F7259	5310-01-059-0992	90	18
11083	7F7621	5310-00-262-4715	69	39
11083	7F9223	5310-00-637-9575	79	7
			163	12
			181	3
			183	3
11083	7G0894	3120-01-095-5804	105	10
11083	7G0897		104	12
11083	7G2318		98	19
11083	7G2476	3020-01-254-0088	105	11
11083	7G2486		106	18
11083	7G2546	4810-01-103-9066	103	41
11083	7G2608		97	19
11083	7G2928		104	7
11083	7G3457		104	14
11083	7G3458	3020-01-097-4784	104	26
11083	7G4030		103	24
11083	7G4291	4820-01-097-0515	103	19
11083	7G4842	5360-01-098-1870	103	25
11083	7G7134		100	10
11083	7G7135		100	9
11083	7G7136		109	2
11083	7G7137		109	1
11083	7G7138		106	26
11083	7G7139		106	23
11083	7G7140		108	80
11083	7G8964		96	3
11083	7G899	3120-01-107-7339	104	25

CROSS-REFERENCE INDEXES

PART NUMBER INDEX

CAGEC	PART NUMBER	STOCK NUMBER	FIG.	ITEM
11083	7G9562	5340-01-098-3957	103	6
11083	7G9563	2520-01-098-3947	103	35
11083	7G9564		103	7
11083	7G9565		103	5
11083	7G9570		103	1
11083	7HC308		128	39
11083	7H1246	5305-01-102-7327	79	6
11083	7H1642	5310-01-102-9868	167	20
11083	7H2079	5310-00-811-2861	0069	5
11083	7H2976	6240-00-044-6914	84	8
11083	7H3958	2520-00-738-8662	119	5
			119	31
			119	40
11083	7H9678	5340-00-999-3230	51	10
11083	7H9899	5330-01-063-9840	27	3
11083	7JC728		204	20
11083	7JC729		204	21
11083	7J204	5330-01-096-0912	32	8
11083	7J2656		150	12
11083	7J2983	5360-01-062-6135	221	6
11083	7J2987	2530-01-062-7175	221	12
11083	7J2988	2530-01-062-6137	221	14
11083	7J2989	5305-01-062-7176	221	15
11083	7J2994	2530-01-062-7177	221	8
11083	7J2999	2530-01-062-7179	221	11
11083	7J4026	4730-01-062-5214	125	13
11083	7J4699	2520-01-063-0812	133	18
11083	7J4704	2520-01-063-0813	133	14
11083	7J5311	2520-01-063-0814	133	9
11083	7J5352	2520-01-063-0815	133	10
11083	7J5367	5310-01-066-9165	122	39
11083	7J5525	2530-01-053-2698	154	16
11083	7J670	4330-01-061-0246	221	28
11083	7J8066		158	11
11083	7K0447	2590-01-243-3614	92	17
11083	7K1695		108	52
			122	29
11083	7K1742		188	9
11083	7K3434	5305-01-095-1239	173	8
11083	7K4343		124	10
11083	7K4474	5940-01-121-0365	80	4
11083	7K4475	2590-01-098-9330	82	18
			183	7
11083	7K4994		132	51
			0132	46
11083	7K6116		135	17
11083	7K6416	5325-01-102-3577	42	44
			221	46
11083	7K6432		119	22
11083	7K9204	5330-00-008-5957	154	19
11083	7K9212	5330-01-098-3169	147	11

CROSS-REFERENCE INDEXES

PART NUMBER INDEX

CAGEC	PART NUMBER	STOCK NUMBER	FIG.	ITEM
11083	7L2181	5330-01-102-5600	108	72
11083	7L6210	5306-01-108-3741	48	27
58312	7L6385-00	5330-01-032-3336	202	35
11083	7L8696	5360-01-026-3098	29	36
11083	7L8765		29	37
11083	7L8768		29	35
11083	7M0320	5305-00-450-0419	163	7
11083	7M1599	5307-01-102-2485	10	4
11083	7M1674	2940-00-084-7543	39	8
11083	7M7147		84	1
11083	7M7193	3120-00-118-3007	48	9
11083	7M7219	3110-00-629-4111	48	10
58312	7M7316-00	5360-00-081-9031	47	27
11083	7M8479	5315-00-193-0904	104	3
11083	7M8480	5315-00-193-0925	105	25
			106	24
			106	56
11083	7M8485	2590-00-930-9407	16	8
			65	15
			65	20
			111	13
			121	12
			124	15
			128	32
			151	18
			203	34
			204	2
			206	15
11083	7M8538		134	6
			158	14
11083	7M9918	5310-00-087-6875	40	28
11083	7N0242		31	3
11083	7N0285		18	10
11083	7N0286		18	8
11083	7N0579		48	31
11083	7N0654		28	13
11083	7N0655		28	25
11083	7N0656		28	42
11083	7N0671		28	12
11083	7N0672		28	23
11083	7N0694		39	26
11083	7N0815		28	16
11083	7N0838		12	6
11083	7N0839		12	4
11083	7N1066	5310-01-117-9326	30	4
11083	7N1138	6350-01-312-6331	89	5
11083	7N1164	2990-01-103-3726	2	8
11083	7N1198	5340-01-103-6825	12	16
11083	7N1208	5360-01-184-6668	30	3
11083	7N1564		25	45
11083	7N1565		25	46

CROSS-REFERENCE INDEXES

PART NUMBER INDEX

CAGEC	PART NUMBER	STOCK NUMBER	FIG.	ITEM
11083	7N1751		2	20
11083	7N209	5360-01-103-2721	50	25
11083	7N2110		112	4
11083	7N2156		18	5
11083	7N2345		62	1
11083	7N2351		48	20
11083	7N2443	3120-01-102-1821	15	9
11083	7N2483	3120-01-156-5188	15	4
11083	7N2484		15	11
11083	7N2485		15	3
11083	7N2486		15	6
11083	7N2489		15	5
11083	7N2650		41	3
11083	7N2652		41	18
11083	7N2693		29	5
11083	7N2694		29	3
11083	7N2900	5365-01-108-0400	61	16
11083	7N296		53	18
11083	7N3047	5340-01-102-7935	22	4
11083	7N3407	2815-01-101-2731	6	4
11083	7N3408		6	8
11083	7N3606	5930-01-104-2202	58	1
11083	7N3629		61	18
11083	7N4033		75	24
11083	7N4039	2510-01-184-0560	57	17
11083	7N4051	2510-01-184-0559	57	4
11083	7N4054		57	11
11083	7N4351	5930-01-097-4299	92	1
11083	7N4368		30	7
11083	7N4519		21	6
11083	7N4553		48	33
11083	7N4554		48	29
11083	7N4555		48	24
11083	7N4574		31	1
11083	7N4580	2815-01-066-5106	11	5
11083	7N4975	3020-01-102-2390	25	14
11083	7N5329		187	2
11083	7N5380	6620-01-110-4620	92	32
11083	7N5659	4710-01-298-3307	25	18
11083	7N5715	5315-01-102-3440	50	16
11083	7N5933	5945-01-182-2460	92	54
11083	7N5959		64	2
11083	7N5973		37	6
11083	7N6128		33	9
11083	7N6271		47	1
11083	7N6389		29	1
11083	7N665	2910-01-104-5155	28	14
11083	7N6650		56	39
11083	7N6651		56	1
11083	7N667	5340-01-121-0525	28	17
11083	7N668	2910-01-104-5199	28	24

CROSS-REFERENCE INDEXES

PART NUMBER INDEX

CAGEC	PART NUMBER	STOCK NUMBER	FIG.	ITEM
7537C	7N7078	2815-01-107-2589	8	4
11083	7N718	5930-00-775-7691	90	17
11083	7N7325		47	36
11083	7N7642		59	36
11083	7N8000	5930-01-153-2396	75	33
11083	7N8009	5930-01-097-4307	77	22
11083	7N8345		9	5
11083	7N8442		57	12
11083	7N8956		25	35
11083	7N9364		3	15
11083	7N9571		7	8
11083	7N9682		3	5
11083	7N9845	5360-01-102-3521	71	3
11083	7N9967	6240-00-155-8707	75	4
			77	3
11083	7SC530	5340-01-287-6723	204	29
11083	7SC570	4730-01-062-7184	117	7
			130	63
			152	17
			153	26
11083	7SC572		152	7
11083	7SC574	4730-01-095-8459	130	65
11083	7SC575		117	8
11083	7S1074		151	63
11083	7S1707		152	32
			153	20
11083	7S1712		130	6
			130	82
11083	7S1801	2815-01-049-8552	22	10
			116	14
11083	7S1803	2590-00-490-5442	116	15
11083	7S2962	5310-01-059-9502	108	26
11083	7S3687		37	3
11083	7S3992	3010-01-102-6721	126	17
11083	7S3994		126	15
11083	7S3996		126	6
11083	7S3997	5360-01-097-6811	126	11
11083	7S3998		126	10
11083	7S3999		126	31
11083	7S4000		126	32
11083	7S4001	5330-01-098-6232	126	33
11083	7S4002		126	4
11083	7S4150		221	85
11083	7S4433	4030-00-351-7002	33	20
11083	7S4440	5365-00-434-1306	33	2
11083	7S4607	2590-01-066-1455	103	9
11083	7S5428		112	3
11083	7S6745	5330-00-498-2907	115	9
11083	7S7807		56	14
11083	7S7808		56	10
11083	7S7809	2930-00-852-1174	56	9

CROSS-REFERENCE INDEXES

PART NUMBER INDEX

CAGEC	PART NUMBER	STOCK NUMBER	FIG.	ITEM
11083	7S8439		151	6
11083	7S8561	5330-01-097-9429	128	36
11083	7S9203	5310-01-108-7537	44	13
			113	16
11083	7S9323	5360-00-116-0448	51	11
11083	7S9370	4730-01-053-8079	151	8
			152	26
11083	7V0657		168	29
11083	7V1558		161	25
11083	7V1559		161	28
11083	7V1782		174	3
11083	7W0205	2520-01-047-6754	112	1
11083	7W1821	2930-01-066-4740	60	4
11083	7W5313	2940-01-072-9417	37	15
11083	7W8445,4P1471, 2 EA 5P0597	2590-01-200-9098	55	8
62983	7074		218	10
62983	7078	4730-00-701-9364	218	31
70485	711	5340-00-664-6881	162	24
			164	19
			167	22
24617	73342		217	17
19207	7373635	5340-00-737-3635	98	38
			103	42
29337	74-250		148	10
29337	74-500		149	13
96151	7443	3120-01-068-3473	144	7
83259	7500-5/8	5330-01-039-3874	110	39
98343	753		202	46
81168	7580-20881		196	9
70082	7623		184	2
76110	765		179	19
36540	7674021	5365-01-100-8868	121	11
			124	16
79136	77-01		146	5
91561	7706-008		205	19
06970	773-357-100-25	3040-01-126-7461	127	13
06970	774-M-TT-2-80	2590-01-101-9630	138	19
19207	7764909	5310-00-776-4909	161	13
72800	7948	5365-01-160-2426	104	30
			106	5
96151	7970	5977-01-095-5206	144	13
30708	8-3-8F5-GSS		214	3
81343	8-8 070202CA(CAD)	4730-00-273-6686	215	13
11083	8A2071		90	2
30780	8BTXS		130	23
			130	27
			130	32
			130	37
			143	44

CROSS-REFERENCE INDEXES

PART NUMBER INDEX

CAGEC	PART NUMBER	STOCK NUMBER	FIG.	ITEM
11083	8B1312	5315-00-245-9995	106	41
11083	8B2327	5365-00-205-4711	64	12
11083	8B3115	5365-01-109-7081	158	17
11083	8B3768	5340-00-363-9858	45	5
			110	45
11083	8B4338		173	6
11083	8B7101		169	10
11083	8B9294	5365-01-102-8153	175	4
11083	8D3883	5306-01-060-4404	128	38
11083	8D3901	5310-01-103-1781	128	42
11083	8D4146	3110-00-144-8589	179	34
11083	8D482	5325-01-105-1968	79	8
			180	26
11083	8D5294	2530-01-065-9086	111	29
11083	8D5295	5315-01-065-9087	44	15
			110	43
11083	8D5673		2	6
			2	15
11083	8F0908	5310-00-235-2428	92	48
11083	8F1315	5305-01-063-5735	181	14
			183	14
11083	8F1326	5310-00-450-0414	69	10
11083	8F1434	5310-00-576-5752	92	53
			190	6
11083	8F3469	5330-00-859-0397	111	26
11083	8F5186		33	19
11083	8F5340	5330-00-854-1603	138	4
			144	8
11083	8F6321		188	2
11083	8F6324	5325-01-103-8016	188	4
11083	8F7242	5310-01-051-0012	50	4
			50	18
11083	8F8151	4820-00-026-8473	186	15
11083	8F8804	5306-00-814-8957	142	20
30780	8HP5N	5365-01-035-4900	137	33
11083	8H0333		26	10
11083	8H0878	5310-01-066-0689	69	3
11083	8H1914		30	14
11083	8H2778	5330-00-585-4284	51	12
11083	8H2807	5310-00-882-8876	51	2
11083	8H2810	2910-00-116-3227	51	13
11083	8H3127	5305-01-023-9064	208	69
11083	8H3128	5306-00-469-3767	209	34
11083	8H5303	5310-01-063-7852	90	21
11083	8H8257	5330-00-893-9220	126	21
11083	8H9181	2590-00-903-6938	47	11
11083	8H9204	5330-00-858-6277	29	17
11083	8H9206		29	14
11083	8H9299	5305-01-108-0649	30	8
11083	8H9804	5315-00-999-8416	33	18
98441	8JBTXS	4730-00-797-6566	214	15

CROSS-REFERENCE INDEXES

PART NUMBER INDEX

CAGEC	PART NUMBER	STOCK NUMBER	FIG.	ITEM
11083	8JC507	2540-01-069-0855	158	10
11083	8J1543		133	21
11083	8J1552	4820-01-162-4342	156	8
11083	8J1553	4820-01-161-9628	143	12
11083	8J1559		156	14
11083	8J1688	5330-01-102-3254	28	18
11083	8J1856	4330-01-200-0867	221	10
11083	8J2010		156	12
11083	8J2318		142	11
11083	8J2388		158	16
11083	8J2634		157	20
11083	8J2635	5360-01-020-4457	157	19
11083	8J2636		158	13
11083	8J3659		157	28
11083	8J3660		158	18
11083	8J3661		158	23
11083	8J3662		158	19
11083	8J3664		157	26
11083	8J3665		157	11
11083	8J3666		158	3
11083	8J3667		158	1
11083	8J3813		157	3
11083	8J4508		136	34
11083	8J4645		111	36
11083	8J5796		221	86
11083	8J5994		150	2
11083	8J6099		155	1
11083	8J6782		155	19
11083	8J6783		155	27
11083	8J6784		155	6
11083	8J6785		155	12
11083	8J6788		155	14
11083	8J6790		155	2
11083	8J8327		135	6
11083	8J8328		135	10
11083	8J8781		221	72
11083	8J8782	4730-01-164-7821	221	75
11083	8J8783		221	78
11083	8K0003		128	28
11083	8K0004		128	45
11083	8K0067		128	44
11083	8K0068		128	9
11083	8K0079		128	11
11083	8K0099		139	12
11083	8K1691		125	1
11083	8K5114		204	28
11083	8K66	5365-01-107-4480	128	27
11083	8K7872		145	4
11083	8K8009		80	3
11083	8K8836		172	6
11083	8L3017	5330-01-102-5599	97	28

CROSS-REFERENCE INDEXES

PART NUMBER INDEX

CAGEC	PART NUMBER	STOCK NUMBER	FIG.	ITEM
11083	8L3441	5310-01-066-4618	8	10
11083	8L3873	5330-00-116-0429	71	2
11083	8L4154	2990-00-244-0235	47	57
11083	8L4155	5305-00-497-0372	47	55
58312	8L4308-00	5306-00-137-3475	47	41
11083	8L5922	5306-01-102-7332	101	12
11083	8L6005	4730-00-958-1475	186	19
11083	8L6521	5305-01-102-8453	163	21
			192	12
11083	8L6565	5315-01-064-1014	31	6
11083	8M0505	4730-01-066-4586	130	35
			139	15
			205	16
11083	8M0506	3805-01-053-2703	43	25
11083	8M0547	4730-01-063-8263	56	34
			205	11
11083	8M0744		203	21
			203	27
11083	8M0755	4730-01-066-4619	43	12
11083	8M0874	4820-01-066-8441	33	5
11083	8M1013	5340-01-069-0788	103	21
11083	8M1241	6220-00-731-6084	84	2
11083	8M1581		30	13
11083	8M2295	5306-00-118-0108	38	11
11083	8M2296	5310-00-843-6947	38	13
11083	8M2337	5310-01-105-1863	90	43
11083	8M2530	5306-00-253-7864	151	20
11083	8M2537		96	9
11083	8M2770	5340-00-426-4793	43	21
			45	20
			73	2
			92	25
11083	8M2772	5340-00-426-4803	73	5
			82	11
			92	2
			164	8
11083	8M4390	5330-00-999-5502	137	20
11083	8M4432	5330-00-913-8878	101	2
11083	8M4433	5330-01-107-5182	97	26
11083	8M4436	5330-00-948-9768	221	74
11083	8M4437	5330-00-942-5114	28	28
11083	8M4443	5330-00-999-5503	95	4
11083	8M4447	5330-00-985-2219	117	12
11083	8M4664	5310-01-105-1865	166	10
11083	8M4986	5330-00-930-5736	19	22
			96	1
			100	19
11083	8M5249	5330-00-948-6062	118	11
11083	8M5252	5330-00-939-0871	113	11
11083	8M5260	5330-00-431-7140	23	9
11083	8M5346	5310-01-108-7539	222	24

CROSS-REFERENCE INDEXES

PART NUMBER INDEX

CAGEC	PART NUMBER	STOCK NUMBER	FIG.	ITEM
11083	8M7145	5310-00-999-8285	90	40
			203	23
11083	8M7160	2530-00-949-0666	108	32
11083	8M744	4730-00-812-0924	206	31
11083	8M8157	5330-00-999-5505	95	5
11083	8M8211		158	15
11083	8M8282	5330-01-026-2850	97	15
11083	8M8283	5330-01-061-9378	3	31
11083	8M8403	2990-00-116-0423	47	7
11083	8M8489	5315-00-760-7425	18	4
			113	5
11083	8M8515	5330-00-123-2727	118	2
11083	8M8627	5360-00-950-2471	96	16
11083	8M8659	5315-00-193-1069	109	3
11083	8M8739	5315-00-139-0178	48	5
11083	8M9024	5310-00-470-5567	17	19
11083	8M9062	2910-00-116-0407	49	4
11083	8M9307	5365-00-938-5568	112	6
11083	8N0335		57	15
11083	8N0444		52	2
11083	8N0560		29	39
11083	8N0561		29	40
11083	8N0634		25	1
11083	8N0808		23	3
11083	8N0897		23	1
11083	8N0934		25	12
11083	8N0935		25	10
11083	8N0936		25	8
11083	8N0937		25	15
11083	8N0938		25	27
11083	8N1465		52	3
11083	8N1467		19	15
11083	8N1468		19	10
11083	8N1496		8	1
11083	8N1607		8	5
11083	8N1608	2815-01-126-9545	8	12
11083	8N1728		8	6
11083	8N1729		8	9
11083	8N1845		38	2
11083	8N1911	5330-01-112-6663	7	1
11083	8N2018	3120-00-480-8317	8	7
11083	8N2104	2940-01-053-4677	17	27
11083	8N2390	5945-01-243-8215	92	58
11083	8N2431	5330-01-102-1812	38	12
11083	8N3117		2	17
11083	8N4051		53	8
11083	8N4052		53	2
11083	8N4054		53	16
11083	8N4056		38	19
11083	8N4550		64	26
11083	8N4712		31	2

CROSS-REFERENCE INDEXES

PART NUMBER INDEX

CAGEC	PART NUMBER	STOCK NUMBER	FIG.	ITEM
11083	8N4971		57	21
75414	8N502	2815-01-050-8142	8	2
11083	8N5411		57	13
11083	8N5422	3120-01-125-4536	6	2
11083	8N5423		6	2
11083	8N5424	3120-01-125-9052	6	2
11083	8N5425	3120-01-129-0710	6	2
11083	8N5527		39	21
11083	8N5542	2930-01-242-8046	57	1
11083	8N6979	2990-00-116-0440	48	19
11083	8N9457	2910-01-131-0101	5	11
11083	8N984	5315-00-582-2466	47	30
11083	8P1163		193	1
11083	8P1419		105	36
11083	8P1455		96	4
11083	8P1471		95	6
11083	8P1556	5360-01-156-8042	102	7
11083	8P2934		97	14
11083	8P3497		88	2
11083	8P4617		104	21
11083	8P4732		194	1
11083	8P514	3010-01-105-5743	108	17
11083	8P5348	5325-01-102-8526	190	13
11083	8P5396		194	6
11083	8P6321	5315-01-098-3929	103	3
11083	8P6836		98	25
11083	8P6838		98	31
11083	8P6839		98	29
11083	8P7067		191	2
11083	8P7401		191	5
11083	8P8837		109	5
11083	8P8952		98	37
11083	8S0134	3120-00-237-6956	47	8
11083	8S1460	5340-01-246-1861	55	2
			55	6
11083	8S1472		30	9
11083	8S1925	3020-00-459-2656	33	12
58312	8S2244-00	5120-00-178-1267	223	5
11083	8S3649		152	24
11083	8S3759		203	2
			203	10
			203	36
11083	8S3879		146	17
11083	8S3918	4730-01-242-6344	65	13
			65	25
			204	11
			204	26
			206	18
11083	8S4055	4730-01-051-7605	205	3
			205	15
11083	8S4591		130	71

CROSS-REFERENCE INDEXES

PART NUMBER INDEX

CAGEC	PART NUMBER	STOCK NUMBER	FIG.	ITEM
58312	8S4613-00	5120-00-861-4014	223	4
11083	8S5383	4130-01-054-5311	68	6
11083	8S5388	5330-01-069-5188	47	33
11083	8S5820	2520-00-455-9263	97	3
11083	8S6212	5305-01-103-5728	106	51
11083	8S6214	5365-01-064-6701	118	8
11083	8S6215	5365-01-064-6702	118	9
11083	8S6251	5330-01-097-6625	128	14
11083	8S6389		131	29
			203	5
			203	13
			203	39
			206	59
11083	8S6391	4730-01-068-9756	205	9
			205	13
11083	8S6393	4730-01-095-0833	125	6
			130	54
			142	8
			143	18
			143	24
11083	8S6417	4730-01-094-7469	117	22
			130	52
			142	10
			143	19
			143	22
			143	25
			143	26
			146	16
			146	24
11083	8S6511	3120-00-440-8463	18	9
11083	8S6721		146	20
11083	8S6959	5330-01-098-3167	135	15
11083	8S7762	5365-00-432-8183	60	23
11083	8S8220	4720-01-053-7374	BULK	6
11083	8S8821	5330-00-431-7137	60	24
11083	8S8957		151	65
11083	8S9089	5305-00-008-5971	2	27
			56	23
			132	54
11083	8S9092	5306-00-455-0460	42	36
			206	35
			220	3
11083	8S9191	5306-00-470-5543	5	4
			68	18
			113	24
11083	8S9355	4720-00-981-8519	65	12
			65	26
			BULK	9
11083	8S9575		43	9
			114	6
11083	8T2604	5330-01-270-1752	47	3

CROSS-REFERENCE INDEXES

PART NUMBER INDEX

CAGEC	PART NUMBER	STOCK NUMBER	FIG.	ITEM
3078C	8WGB1X-S		214	7
98441	8WLNS	5310-00-812-4283	139	23
16764	801077	9390-00-839-1864	70	6
02280	805287		168	8
72619	81-5710-01-403	6210-01-172-5974	75	2
			77	7
11083	8145		206	32
18876	8168376	4730-00-287-0276	143	8
72619	820-2701-0431-50 2	6210-01-101-2794	81	5
72619	820-2701-0432-50 2		81	6
72619	820-2701-0433-50 2	6210-01-101-2795	81	4
03199	82154		64	23
96151	8318	4820-01-079-1486	144	22
96151	8329	3120-01-087-7063	144	2
96151	8344		144	9
74842	8349(LLII)	5340-01-161-0594	77	27
13445	8398	5930-00-715-1939	90	22
96151	8436-4		144	16
96151	8438	2530-01-081-2752	144	18
36540	845621	5365-01-100-8867	121	13
			124	17
18876	8519718	5310-00-573-5639	101	11
12204	853661	5310-00-262-2285	44	8
11132	860090	2590-01-105-2013	200	5
11132	860111	2590-01-104-4097	200	10
52555	8675-1		210	1
11083	8707	4730-01-023-8534	143	2
			143	7
60703	87415-506TM		182	5
80020	87750-25	5306-00-497-7419	34	4
			36	4
			94	13
			110	27
			174	1
60703	87883-4	2540-01-095-0037	180	11
60703	87900-85		180	9
60703	88841-28		180	10
77060	89C0186		74	12
11132	8903538		200	3
			0009	9
60703	89448		180	12
11132	897448	2590-01-104-4081	200	6
70040	8992440	6685-01-097-2058	77	19
70040	8992445		77	30
70040	8992917	6685-01-102-1652	73	10
71741	9-12		188	3
11083	982232	6680-00-365-5325	27	2
11083	987233	5310-00-559-0070	69	11

CROSS-REFERENCE INDEXES

PART NUMBER INDEX

CAGEC	PART NUMBER	STOCK NUMBER	FIG.	ITEM
11083	9B7233	5310-00-559-0070	75	15
			92	40
11083	9D2449	2920-01-066-7642	90	16
11083	9D2828	5940-01-293-7470	74	13
11083	9D4513	5310-01-053-2717	222	9
11083	9D8661	2920-01-066-5207	92	66
11083	9F1399	5330-00-714-2330	119	19
11083	9F2167	2530-00-274-4510	139	3
11083	9F3788		104	10
11083	9F4446	5330-00-862-6861	61	15
11083	9F5644	5310-01-063-5822	181	17
			183	24
			0092	14
11083	9F6705	5360-00-664-4194	136	17
11083	9F7022	5306-00-404-1417	208	26
			209	44
11083	9F7882	5315-01-066-4707	25	44
11083	9F8885	5365-01-097-6829	169	22
11083	9F8910	5315-01-099-8048	132	11
11083	9F9958	5305-01-102-1785	42	20
11083	9F9959	4010-01-107-7375	42	22
11083	9G0931	5340-01-184-6537	190	2
11083	9G1904		98	28
11083	9G2399	5305-01-103-8797	92	72
11083	9G5287	2520-01-097-6326	104	22
			105	16
			105	27
			106	30
			106	55
11083	9G5323	5330-01-105-6722	128	6
11083	9H1024	5310-00-808-6600	124	29
11083	9H1031	5310-00-808-6604	3	12
11083	9H2367	5360-00-455-7142	157	32
11083	9H5537	5360-00-894-7275	106	35
11083	9H5546	5315-01-067-1727	105	21
11083	9H6687	5315-01-053-4721	16	5
11083	9H6761	5330-00-894-7299	132	52
11083	9H8260	5306-00-008-5943	126	28
11083	9H8890	5330-00-913-8117	42	39
			221	42
11083	9J3493		65	19
11083	9J3517		65	22
11083	9J4066	4730-01-199-4857	221	29
11083	9J4071	5360-01-102-3253	158	24
11083	9J4074		137	21
11083	9J4075		137	29
11083	9J4076		137	10
11083	9J4077		137	5
11083	9J4078		137	22
11083	9J4079		137	19
11083	9J4080		131	15

CROSS-REFERENCE INDEXES

PART NUMBER INDEX

CAGEC	PART NUMBER	STOCK NUMBER	FIG.	ITEM
11083	9J4120		221	63
11083	9J4128		221	83
11083	9J4682		65	16
11083	9J4683		65	17
11083	9J4693		132	53
11083	9J4694		136	20
11083	9J4695	4320-01-242-3022	134	1
11083	9J4696		134	11
11083	9J4699		221	71
11083	9J4711		221	69
11083	9J4716		221	27
11083	9J4717		221	33
11083	9J4722		221	80
11083	9J4751		65	21
11083	9J477	5365-01-108-7881	156	5
11083	9J4989		221	65
11083	9J5624	5365-01-247-9062	137	24
11083	9J5686	5330-01-095-1255	144	12
11083	9J5875		154	7
			154	12
11083	9J7031	4730-01-165-9540	221	77
11083	9J7195	4330-01-199-6770	221	4
11083	9J8165		154	1
11083	9J8166		154	11
11083	9J8171		154	5
11083	9J8172		154	6
11083	9J8225		157	5
11083	9J8243		221	53
11083	9J8675		133	1
11083	9J9316	5340-01-202-9165	221	30
11083	9J9318		133	11
11083	9J9821		158	2
11083	9K0100		128	30
11083	9K0101		128	10
11083	9K0700		91	14
11083	9K0724		147	6
11083	9K0725		147	12
11083	9K0726		147	8
11083	9K0802		147	24
11083	9K0803		147	18
11083	9K0805		147	19
11083	9K0806		147	23
11083	9K2514	3120-01-105-1935	123	10
11083	9K2515		123	12
11083	9K2522		151	47
11083	9K2549		122	17
11083	9K2803		123	8
11083	9K2804		123	5
11083	9K2805		122	15
11083	9K3186		139	11
11083	9K3837		138	23

CROSS-REFERENCE INDEXES

PART NUMBER INDEX

CAGEC	PART NUMBER	STOCK NUMBER	FIG.	ITEM
11083	SK4929		138	16
11083	SK4934		138	2
11083	SK5567		206	2
11083	SK5636		146	32
11083	SK5639	5315-01-098-3925	159	9
11083	SK6605	5365-01-157-6895	110	12
11083	SK6666		145	31
11083	SK6762	5315-01-103-0061	145	29
11083	SK6768	5315-01-098-6463	145	13
11083	SK6769		145	18
11083	SK721	5365-01-107-4914	147	13
11083	SK723	5315-01-105-7651	147	5
11083	SK7807		128	18
11083	SK8025		143	15
11083	SK804	5315-01-134-8857	147	17
11083	SL1775	5340-01-209-7389	54	7
11083	SL2685	3040-00-119-0612	110	23
11083	SL5158	4720-01-067-6332	34	12
			67	3
11083	SL5839		39	11
11083	SL5854	5330-00-545-7691	3	6
11083	SL6448		47	13
11083	SL6509		48	37
11083	SL6639	3030-01-030-4369	68	22
11083	SL6884	2910-01-066-5410	28	38
11083	SL6891		30	17
11083	SL6892	2910-01-182-7834	30	10
11083	SL6893	2910-01-096-4344	30	2
11083	SL6958	4720-01-243-0870	34	26
11083	SL7235	5365-01-103-7156	49	8
11083	SL7712	5310-01-024-3323	12	14
			12	22
			12	34
11083	SL8339	5310-01-070-6979	161	5
11083	SL8660	5330-01-102-8389	45	15
11083	SL8925	5306-00-165-1934	10	2
11083	SL9132	5310-01-061-8633	92	61
11083	SL9766	5315-01-102-1782	31	16
11083	SM1311	5310-00-445-4633	45	7
			132	40
			180	18
			182	8
			183	16
11083	SM1503	5330-01-135-7503	105	40
11083	SM1869		39	28
11083	SM1974	5310-00-432-4064	28	4
			34	7
			36	1
			41	8
			48	28
			53	14

CROSS-REFERENCE INDEXES

PART NUMBER INDEX

CAGEC	PART NUMBER	STOCK NUMBER	FIG.	ITEM
11083	9M1974	5310-00-432-4064	56	6
			58	3
			98	21
			102	2
			161	23
			197	16
			202	9
11083	9M1986	5360-01-095-1834	115	4
11083	9M1990	5315-01-103-0060	105	32
11083	9M2001	5315-00-760-7424	105	42
11083	9M2089	5315-01-113-2356	48	30
11083	9M2307	5310-01-108-7525	188	5
11083	9M2421	5310-01-098-0626	154	22
11083	9M2793	4730-00-931-8501	56	27
11083	9M2828	5310-00-009-7704	124	11
11083	9M3116	5330-00-982-9541	56	24
11083	9M3695	2590-01-064-7492	37	17
11083	9M3835	2590-00-410-1903	161	21
			167	38
11083	9M3838		161	22
11083	9M3903		90	35
11083	9M4313		96	11
11083	9M4355	5365-01-032-7272	105	22
11083	9M4704	5305-00-978-9374	47	49
11083	9M4849	2520-00-847-4351	17	13
			41	16
11083	9M5052		180	15
			182	13
11083	9M5242	4720-00-491-3007	206	65
11083	9M5590		126	12
11083	9M5614		126	14
11083	9M5615		126	13
11083	9M5892	5330-00-367-5819	129	14
11083	9M6097	5330-01-102-7978	124	1
11083	9M6098		124	3
11083	9M6292	5340-00-116-0412	49	3
11083	9M6302	5310-00-470-5568	48	6
11083	9M6303	5360-00-116-0432	48	7
11083	9M6527	5310-00-995-8288	60	20
			114	12
			138	24
			160	4
			162	13
			167	7
			168	24
			176	6
11083	9M6970	5315-01-102-1781	31	5
11083	9M7002	5330-00-105-0368	17	8
11083	9M8406	5340-01-064-3819	90	30
11083	9M8867	3040-00-491-3215	66	10
11083	9M9085	5925-00-890-5035	75	12

CROSS-REFERENCE INDEXES

PART NUMBER INDEX

CAGEC	PART NUMBER	STOCK NUMBER	FIG.	ITEM
11083	9M9085	5925-00-890-5035	92	51
11083	9M9647	5330-00-869-6566	16	12
			17	18
11083	9M9740	2910-00-740-3593	115	8
11083	9M9788	5315-00-952-7737	47	28
11083	9N0016		27	1
11083	9N0592		30	16
11083	9N0593	4820-01-183-5961	30	12
11083	9N1650	5310-01-102-2478	82	20
11083	9N1916		46	8
11083	9N1917	2990-01-107-2418	46	1
11083	9N2165		46	12
11083	9N2475	3020-01-067-5321	15	12
11083	9N2481		28	32
11083	9N2583		5	5
11083	9N2607		5	9
11083	9N3018		27	4
11083	9N3033	5330-01-102-3562	60	9
11083	9N3312		59	21
11083	9N3323		48	23
11083	9N3324		47	35
11083	9N3363		47	4
11083	9N3645	5315-01-102-3441	67	9
11083	9N3667		67	10
11083	9N3668	2520-01-184-1042	67	8
11083	9N3684		48	1
11083	9N3693		28	36
11083	9N3742		47	6
11083	9N3847		29	18
11083	9N3938		29	10
11083	9N3970		28	2
11083	9N3971		28	3
11083	9N3972		28	44
11083	9N3973		28	8
11083	9N3974		28	43
11083	9N3975		28	10
11083	9N3976		28	40
11083	9N3977		28	1
11083	9N3978		28	39
11083	9N5005		28	34
11083	9N5075		26	3
11083	9N5077		26	6
11083	9N5078		26	7
11083	9N6289	2930-01-128-5834	KIT	
11083	9P1269		108	74
11083	9P3041	5360-01-098-0283	103	26
11083	9P5476		103	15
11083	9S0798	3120-00-237-6957	47	5
11083	9S1310	5340-00-426-4673	143	48
11083	9S1328	5310-00-220-6552	138	3
11083	9S1343	5340-00-422-2573	104	34

CROSS-REFERENCE INDEXES

PART NUMBER INDEX

CAGEC	PART NUMBER	STOCK NUMBER	FIG.	ITEM
11083	9S1362	5305-01-102-7344	122	4
11083	9S1366	5306-00-455-0459	147	2
			150	4
			169	24
			217	11
11083	9S1572		37	11
11083	9S2007	5305-00-450-0421	69	27
11083	9S2008	5305-00-450-0420	69	36
11083	9S2009	5305-00-450-0422	69	43
11083	9S2011	5305-01-053-4742	69	51
11083	9S2084	5330-01-159-1075	221	84
11083	9S2247	5310-00-952-0561	69	31
11083	9S2256	5330-01-053-4844	69	48
11083	9S2299	5310-00-264-0115	28	45
11083	9S2391	5330-00-237-6928	69	42
			69	50
11083	9S2437	5305-00-090-4147	69	34
11083	9S2438	5305-00-090-4227	69	4
11083	9S247	4720-01-051-6773	65	60
			203	3
			203	11
			203	37
			205	8
			BULK	5
11083	9S2542	5305-00-090-4204	69	33
11083	9S2544		69	2
11083	9S2592	4720-00-028-9929	39	3
11083	9S3032	5340-00-261-4042	27	7
11083	9S4160	3120-00-854-1068	31	8
11083	9S4167	5307-01-051-2364	52	4
11083	9S4181	5365-01-026-9555	16	11
			128	33
			151	19
11083	9S4182	5365-00-175-5051	136	14
11083	9S4183	5365-00-478-2920	65	39
			100	13
			131	10
11083	9S4185	5365-00-763-0120	16	9
			72	1
			158	8
11083	9S4187	2530-01-062-5317	157	15
11083	9S4188	4710-01-053-2705	131	48
11083	9S4189	5365-01-102-8028	136	10
11083	9S4190	5365-01-053-0180	3	27
			110	40
11083	9S4191	5365-00-411-4584	29	21
			96	5
			100	17
			106	28
			115	5
			118	21

CROSS-REFERENCE INDEXES

PART NUMBER INDEX

CAGEC	PART NUMBER	STOCK NUMBER	FIG.	ITEM
11083	9S4191	5365-00-411-4584	126	29
			143	41
11083	9S4466	2990-01-032-7259	47	29
11083	9S4673	5340-00-251-3446	47	25
11083	9S4686		137	3
11083	9S4968		75	17
11083	9S5282	5310-01-107-5172	50	10
11083	9S6130	5365-00-472-5300	111	1
11083	9S6154		157	34
11083	9S6155	5305-01-164-2318	156	1
11083	9S6465		132	17
11083	9S7583	5365-01-102-8027	117	30
11083	9S7720	4730-00-496-7511	61	32
11083	9S7722	4730-00-278-0155	25	38
11083	9S7949	2520-01-064-6625	107	15
11083	9S7950	3010-01-064-7524	107	16
11083	9S8004	5365-01-036-0010	136	22
11083	9S8005	5365-01-035-4900	131	35
			134	16
			136	32
11083	9S8008	4730-01-064-3790	29	12
			47	23
			48	36
			157	1
11083	9S8010	5365-00-476-4985	150	6
			155	23
			221	18
11083	9S8016	5330-00-548-6119	181	22
			183	19
11083	9S9082		223	1
11083	9S9238	5365-01-097-6828	162	19
11083	9S9724		65	58
11083	9S9830	5305-01-053-4758	69	9
11083	9S9979		56	13
11083	9S9993	4730-01-062-6179	16	4
11083	9S9994	2815-00-114-3943	16	2
11083	9V1292	2530-01-245-6904	140	1
11083	9W-2653	5930-01-111-7673	131	17
11083	9W1491	6645-01-149-9176	75	25
11083	9Y4582	5330-01-066-4804	24	3
60703	90128	5340-01-232-5398	180	29
73331	901824		82	22
11132	9C4977	5330-01-107-6747	200	2
			200	9
25184	906-6-8309	5330-00-242-7403	149	18
25184	906-737-70	5330-00-801-3354	29	22
			34	2
			43	24
			96	6
			100	16
			106	29

CROSS-REFERENCE INDEXES

PART NUMBER INDEX

CAGEC	PART NUMBER	STOCK NUMBER	FIG.	ITEM
25164	906-737-70	5330-00-801-3354	111	16
			115	6
			117	20
			118	4
			125	12
			126	30
			128	20
			130	59
			131	20
			136	21
			137	4
			142	6
			146	9
			150	10
			157	33
			158	7
18876	9072391	5310-00-660-1938	48	22
73331	910824	6220-01-097-4320	87	13
73331	910825	6220-01-097-4321	0087	1
73331	910826	6220-01-097-1881	0087	7
16764	9121427		70	19
52555	9123-1		207	56
65508	9124-1	7690-01-305-4868	207	59
65508	9125-1	7690-01-305-4875	207	58
52555	9126-1		207	57
65508	9139		209	1
52555	9140-1		207	49
73331	921472	6220-00-832-8774	83	4
			87	3
			87	9
			87	15
			87	21
65508	9231-1	5340-01-304-5288	207	43
52555	9235-1		207	40
52555	9248-1		207	39
43334	93L05	3110-00-100-2367	146	7
65508	9305-1	3930-01-198-0862	207	14
			209	15
65508	9305-2	2590-01-199-3102	209	15
52555	9322-1		209	3
52555	9351-1		208	14
65508	9408-1	4010-01-202-6761	207	44
			209	52
52555	9412-1		207	5
16764	9412305	5310-00-965-6000	70	11
65508	9413-1	5340-01-306-8616	207	9
52555	9414-1		207	12
16764	9415235	5365-00-715-1152	70	10
52555	9417-1		208	36
16764	9418881	5310-00-944-5896	69	38
52555	9425-1		207	48

CROSS-REFERENCE INDEXES

PART NUMBER INDEX

CAGEC	PART NUMBER	STOCK NUMBER	FIG.	ITEM
65508	9426-1		208	25
16764	9441934	5310-01-178-0069	70	51
52555	9457-1		207	62
28882	95051		173	18
28882	95052		173	12
28882	95056		173	14
70960	954-03-43581		120	1
70960	954-60-43581		120	4
13445	956-9105	2920-01-096-9247	77	26
52555	9564-1		208	10
70960	960-03-43582		119	38
70960	960-04-43583		119	29
70960	960-13-43585		119	3
71607	9784-112		75	31
66508	9815		211	1
44655	995-5B-180		76	6
79550	998		202	31

CROSS-REFERENCE INDEXES

FIGURE AND ITEM NUMBER INDEX

FIG.	ITEM	STOCK NUMBER	CAGEC	PART NUMBER
BULK	1	4720-01-062-5930	11083	5P182
BULK	2		11083	5P181
BULK	3		11083	5V8999
BULK	4	4720-01-066-4587	11083	5P178
BULK	5	4720-01-051-6773	11083	9S247
BULK	6	4720-01-053-7374	11083	8S8220
BULK	7	4720-01-018-6551	11083	5P6624
BULK	8		11083	5P180
BULK	9	4720-00-981-8519	11083	8S9355
BULK	10	4720-00-198-5808	11083	5P179
BULK	11		11083	5P740
BULK	12		11083	5P0878
BULK	13		11083	5P1836
BULK	14	6145-00-347-1171	11083	5P5623
BULK	15		11083	6A3770
BULK	16		11083	5P643
BULK	17	6145-01-276-7544	11083	5P4515
BULK	18	6145-01-276-7545	11083	5P4517
BULK	19		11083	5P674
BULK	20		11083	5P641
BULK	21		11083	5P396
BULK	22		11083	5P648
BULK	23		11083	5P680
KIT			11671	25658
KIT			11671	26058-C
KIT		2930-01-128-5834	11083	9N6289
KIT		4320-01-101-8685	11671	13887
KIT		5330-00-960-9332	23382	19894
KIT		5330-01-070-5411	11083	5P8057
KIT		5330-01-128-6817	11083	5P9843
KIT		5330-01-128-6818	11083	6V241
KIT		5330-01-129-0803	11083	6V230
KIT		5330-01-129-0804	11083	6V236
KIT		5330-01-129-0805	11083	5P9972
KIT		5330-01-133-0568	11083	5R4553
KIT		5330-01-136-4548	11671	14663-1
KIT		5330-01-142-7005	11083	6V2978
KIT		5330-01-147-4999	11083	6V220
1		2815-01-109-4374	11083	5R4536
1	1	2815-01-109-4374	11083	5R4536
2	1	5310-01-110-7920	11083	4J2677
2	2	5306-01-108-3740	11083	6J3913
2	3		11083	1V6546
2	4	5305-00-724-7221	96906	MS90728-163
2	5	5310-00-139-7030	11083	4D3704
2	6		11083	8D5673
2	7		11083	1V6545
2	8	2990-01-103-3726	11083	7N1164
2	9		11083	6N0966
2	10	5306-00-426-3605	11083	2A1538

CROSS-REFERENCE INDEXES

FIGURE AND ITEM NUMBER INDEX

FIG.	ITEM	STOCK NUMBER	CAGEC	PART NUMBER
2	11	5310-01-102-2477	11083	5P8248
2	12		11083	1V6547
2	13	5305-00-724-7221	96906	MS90728-163
2	14	5310-01-095-4631	11083	5P8247
2	15		11083	8D5673
2	16		11083	1V6544
2	17		11083	8N3117
2	18	5305-00-724-7222	96906	MS90728-164
2	19	5310-01-102-2477	11083	5P8248
2	20		11083	7N1751
2	21	5305-00-071-2069	96906	MS90728-113
2	22	5310-00-431-7239	11083	2M849
2	23		11083	4N4303
2	24	2815-01-050-8021	11083	4N1706
2	25		11083	6N9365
2	26	5310-00-431-7239	11083	2M849
2	27	5305-00-008-5971	11083	8S9089
2	28		11083	6N6013
2	29	5306-00-426-2922	11083	S1573
2	30	5306-00-426-3139	11083	1A8063
2	31	5310-01-102-2477	11083	5P8248
2	32		11083	4N2184
2	33		11083	4N2084
2	34	5306-00-275-5012	11083	S1566
2	35	5310-00-139-7030	11083	4D3704
3	1		11083	6N9133
3	2		11083	4N4178
3	3	5340-01-102-3538	11083	3S6605
3	4	5315-01-053-7342	11063	4N1650
3	5		11083	7N9682
3	6	5330-00-549-7691	11083	9L5854
3	7	2815-01-179-3109	11083	1W6280
3	8	5330-01-053-7320	11083	6V5121
3	9	3110-01-066-4625	11083	4N0685
3	10	4730-00-460-6725	6N299	0920416
3	11		11083	4N0614
3	12	5310-00-808-6604	11083	9H1031
3	13	5306-01-050-8020	11083	3P1323
3	14	3110-01-050-8048	11083	4N6658
3	15		11083	7N9364
3	16	4730-00-057-5555	79470	C3169X6
3	17	4710-01-184-4741	11083	4N9881
3	18		11083	4N9879
3	19		11083	4N9880
3	20		11083	6N1433
3	21		11083	6N1432
3	22	5305-01-050-8064	11083	4N9916
3	23	2815-01-066-4623	11083	4N0683
3	24	4730-00-042-8988	19207	117244
3	25	5365-01-110-8004	11083	4N693
3	26	5330-00-167-5174	81349	M83248/2-910

CROSS-REFERENCE INDEXES

FIGURE AND ITEM NUMBER INDEX

FIG.	ITEM	STOCK NUMBER	CAGEC	PART NUMBER
3	27	5365-01-053-0180	11083	9S4190
3	28	4730-00-044-4688	89346	50410DA
3	29	5307-01-102-7126	11083	6L4428
3	30	5340-00-365-5169	11083	3B0645
3	31	5330-01-061-9378	11083	8M8283
4	1	5306-00-260-4508	11083	0S1594
4	2	5310-00-117-4788	11083	5M2894
4	3		11083	4N1683
4	4	5330-01-102-1807	11083	4N1684
4	5		11083	4N1779
4	6	5330-01-102-1808	11083	4N4307
4	7	5330-01-107-1248	11083	4N864
4	8		11083	4N1682
4	9	5330-01-066-5363	11083	4N0790
4	10	2815-01-050-8003	11083	4N0794
4	11	5306-00-263-7301	11083	0L1351
4	12	2990-01-053-4534	11083	2P2772
4	13	5330-01-066-5364	11083	4N0933
5	1	5306-00-426-2865	11083	L1352
5	2	5305-01-015-6841	11083	0S1591
5	3	5310-00-117-4788	11083	5M2894
5	4	5306-00-470-5543	11083	8S9191
5	5		11083	9N2583
5	6	5306-00-637-4927	11083	1A5183
5	7	5305-00-362-7336	11083	5B2638
5	8		11083	6N6731
5	9		11083	9N2607
5	10	5330-00-238-7694	11083	2S2251
5	11	2910-01-131-0101	11083	8N9457
5	12		11083	4N7515
5	13		11083	6N5897
5	14		11083	6N6732
5	15	4730-00-924-7886	11083	5M6214
5	16		09367	0920416
5	17	5305-01-051-2302	11083	2H3750
5	18	5310-00-262-4789	11083	1F9233
5	19	4730-00-010-3874	11083	2B0858
5	20	4730-00-122-3969	11083	1B5174
5	21	5307-01-296-7755	11083	6V5699
5	22	5330-01-184-0920	11083	4W1055
5	23		11083	3S5390
5	24	5340-01-108-8855	11083	5P63
5	25	5340-01-107-4472	11083	4N932
5	26	5330-01-102-3525	11083	2W7984
5	27	2815-01-104-0831	11083	6N9978
5	28		11083	6N9976
5	29	5340-00-229-9294	11083	3B0623
5	30	2815-00-116-9445	11083	4S8898
5	30	2815-00-116-9446	11083	4S8899
5	30	2815-01-051-2343	11083	4N5893
5	31	2815-00-114-3107	11083	4S8902

CROSS-REFERENCE INDEXES

FIGURE AND ITEM NUMBER INDEX

FIG.	ITEM	STOCK NUMBER	CAGEC	PART NUMBER
5	31	2815-00-116-9557	11083	4S8903
5	31	2815-00-409-3899	11083	1W5283
5	32	5340-00-365-5169	11083	3B0645
5	33	5330-01-051-2401	11083	4N7253
6	1	3120-01-185-0628	11083	1W5252
6	2		11083	8N5423
6	2	3120-01-069-2667	11083	6N8743
6	2	3120-01-125-9052	11083	8N5424
6	2	3120-01-129-0710	11083	8N5425
6	2	3120-01-129-4536	11083	8N5422
6	3	5330-01-102-3251	11083	2W1733
6	4	2815-01-101-2731	11083	7N3407
6	5	2815-01-066-4622	11083	4N0418
6	6	3110-01-145-6997	60380	C-1314-Q
6	7		09367	0917673-6
6	8		11083	7N3408
6	9	5315-01-066-4624	11083	4N0684
6	10	5305-00-726-2562	96906	MS90727-175
6	11	5310-00-139-7030	11083	4D3704
6	12	2815-01-050-8017	11083	2P5149
6	13	2815-01-050-8022	11083	4N2109
7	1	5330-01-112-6663	11083	8N1911
7	2	5305-01-062-6007	11083	2H6488
7	3	4730-00-263-3122	11083	3B0551
7	4	5305-00-426-3085	58312	1A5964-00
7	5	5306-00-426-2932	11083	0S1619
7	6	5305-00-781-3929	96906	MS90728-75
7	7	5306-00-637-4956	11083	0S1588
7	8		11083	7N9571
7	9	5305-00-726-2562	96906	MS90727-175
7	10	5310-00-139-7030	11083	4D3704
7	11		11083	4N1070
7	12		11083	4N1071
7	13	3020-01-053-7346	11083	4N2514
7	14		26953	A8069-006
7	15	5307-00-411-4501	11083	3D2871
7	16	2520-01-069-0889	11083	3S0036
7	17	5330-01-066-5364	11083	4N0933
7	18	2990-01-053-4534	11083	2P2772
7	19	5310-00-117-4788	11083	5M2894
7	20	5306-00-423-8194	11083	1A2029
7	21	5330-00-931-8015	11083	4M6853
7	22	2990-01-053-4566	11083	4N1114
7	23	5310-00-139-7030	11083	4D3704
7	24	5305-00-724-7221	96906	MS90728-163
8	1		11083	8N1496
8	2	2815-01-050-8142	75414	8N502
8	3	2815-01-050-8141	11083	2P2817
8	4	2815-01-107-2589	75370	7N7078
8	5		11083	8N1607
8	6		11083	8N1728

CROSS-REFERENCE INDEXES

FIGURE AND ITEM NUMBER INDEX

FIG.	ITEM	STOCK NUMBER	CAGEC	PART NUMBER
8	7	3120-00-480-8317	11083	8N2018
8	8		11083	6N8942
8	8	5310-00-117-4788	11083	5M2894
8	9		11083	8N1729
8	10	5310-01-066-4618	11083	8L3441
8	11		11083	6N7436
8	12	2815-01-126-9545	11083	8N1608
8	13	5365-00-804-2784	96906	MS16625-1200
9	1		11083	6N5673
9	2		11083	6N5674
9	3		80657	11BA011636
9	4	5315-00-616-5525	96906	MS35756-9
9	5		11083	7N8345
9	6	5305-00-115-9526	96906	MS18154-58
9	7	2815-01-050-8033	11083	4N0342
9	9		11132	890353B
9	9	5305-00-688-2111	96906	MS90728-63
10	1	5330-01-069-5128	11083	5P5678
10	2	5306-00-165-1934	11083	9L8925
10	3		11083	6N2522
10	4	5307-01-102-2485	11083	7M1599
10	5		11083	6N2438
10	6	2815-01-051-2355	11083	4N0851
10	7	2815-01-051-2334	11083	4N4957
11	1	2805-00-288-3650	11083	2A4429
11	2	5360-01-051-2344	11083	4N5906
11	3	2815-01-051-2305	11083	2N5775
11	4	2815-01-051-2340	11083	4N5654
11	5	2815-01-066-5106	11083	7N4580
11	6	2815-01-051-2316	11083	4N2803
11	7		71785	R0623-99
11	8		71785	R0622-99
11	9	2815-01-183-4649	11083	6N7174
12	1	5306-01-051-2310	11083	2P9845
12	2	5310-00-262-4789	11083	1F9233
12	3		11083	4N1718
12	4		11083	7N0839
12	5	3110-00-992-1048	11083	2D6642
12	6		11083	7N0838
12	7	3110-00-949-1438	11083	4B9880
12	8		80657	11BA011636
12	9	5360-01-051-2308	11083	2N7229
12	10	5305-00-352-7287	11083	1A2935
12	11		11083	4N1106
12	12		11083	4N1107
12	13	5340-00-423-9532	11083	5B1866
12	14	5310-01-024-3323	11083	9L7712
12	15	2815-01-051-2338	11083	4N5614
12	16	5340-01-103-6825	11083	7N1198
12	17	5310-01-051-2307	11083	2N7228
12	18	5365-00-664-2779	79136	X5133-98MD

CROSS-REFERENCE INDEXES

FIGURE AND ITEM NUMBER INDEX

FIG.	ITEM	STOCK NUMBER	CAGEC	PART NUMBER
12	19	2815-01-066-4736	11083	4N5612
12	20	2815-01-066-4736	11083	4N5612
12	21	5305-01-051-2306	11083	2N5842
12	22	5310-01-024-3323	11083	9L7712
12	23	2815-01-051-2337	11083	4N5609
12	24	2815-01-066-4748	11083	6N6872
12	25	5306-00-423-8119	11083	4W2475
12	26		11083	4N6232
12	27		11083	4N6181
12	28		11083	4N5928
12	29		11083	6N4588
12	30		11083	6N4587
12	31	2815-01-066-4735	11083	4N5611
12	32	2815-01-053-8007	11083	4N5610
12	33	5305-01-051-2306	11083	2N5842
12	34	5310-01-024-3323	11083	9L7712
13	1		11083	6N7142
13	2		11083	4N1625
13	3	5306-00-426-2865	11083	L1352
13	4	5306-00-285-1368	11083	L1143
13	5	5310-00-117-4788	11083	5M2894
13	6	5307-01-063-0644	11083	3K3256
13	7	5307-00-426-3581	11083	6F7012
14	1	5306-00-263-7301	11083	0L1351
14	2		11083	6N2327
14	3	5330-01-053-4829	11083	2N8630
14	4		11083	4N1985
14	5	5330-01-102-3258	11083	4N1998
14	6	5307-00-900-5570	11083	3M0496
14	7	5310-00-117-4788	11083	5M2894
14	8	5310-00-251-0088	15564	1377A
14	9	5330-01-066-5364	11083	4N0933
14	10	2990-01-053-4534	11083	2P2772
14	11	5306-00-423-8194	11083	1A2029
14	12	5330-01-102-3259	11083	4N1722
14	13		11083	4N1721
14	14	5307-00-426-3581	11083	6F7012
14	15	5307-01-069-1418	11083	2P1974
14	16	5340-01-102-3539	11083	4N8478
14	17	5306-00-426-2865	11083	L1352
14	18	5306-00-897-9295	11083	5F4899
14	19	5307-01-102-2484	11083	4F9081
14	20	5330-01-102-3257	11083	6N2508
14	21		11083	6N2509
14	22	5306-00-260-4508	11083	0S1594
15	1	5306-00-226-4826	96906	MS90728-33
15	2		11083	4N0798
15	3		11083	7N2485
15	4	3120-01-156-5188	11083	7N2483
15	5		11083	7N2489
15	6		11083	7N2486

CROSS-REFERENCE INDEXES

FIGURE AND ITEM NUMBER INDEX

FIG.	ITEM	STOCK NUMBER	CAGEC	PART NUMBER
15	7	5315-00-616-5525	96906	MS35756-9
15	8		11083	4N0868
15	9	3120-01-102-1821	11083	7N2443
15	10	5306-00-263-7301	11083	0L1351
15	11		11083	7N2484
15	12	3020-01-067-5321	11083	9N2475
15	13	5310-01-051-2300	11083	1P7346
15	14	5305-01-026-9518	11083	0S1571
15	15	5315-00-616-5525	96906	MS35756-9
16	1	5306-00-263-8978	11083	S1587
16	2	2815-00-114-3943	11083	9S9994
16	3	5365-00-003-6918	11083	5M2669
16	4	4730-01-062-6179	11083	9S9993
16	5	5315-01-053-4721	11083	9H6687
16	6	5330-00-404-4090	11083	2M9189
16	7	5330-01-053-4832	11083	4N1151
16	8	2590-00-930-9407	11083	7M8485
16	9	5365-00-763-0120	11083	9S4185
16	10	5330-00-167-5173	81349	M83248-2-908
16	11	5365-01-026-9555	11083	9S4181
16	12	5330-00-869-6566	11083	9M9647
16	13	5340-01-103-8753	11083	4N9968
16	14	5306-00-637-4956	11083	0S1588
16	15	5310-00-117-4788	11083	5M2894
16	16	4730-00-263-3122	11083	3B0551
16	17	2815-01-135-7514	11083	6N9055
16	18	5306-00-637-4956	11083	0S1588
16	19	5310-00-117-4788	11083	5M2894
17	1	5306-00-260-4508	11083	0S1594
17	2	5310-00-117-4788	11083	5M2894
17	3		11083	4N0861
17	4	5330-01-107-3621	11083	4N865
17	5	5360-01-053-4656	11083	4N8150
17	6	5340-00-499-9648	11083	1P1367
17	7	5330-00-122-9656	11083	6L1651
17	8	5330-00-105-0368	11083	9M7002
17	9		11083	4N8647
17	10	5306-00-814-6565	11083	S1608
17	11	5306-00-426-2974	11083	T65
17	12		11083	4N8770
17	13	2520-00-847-4351	11083	9M4849
17	14		11083	4N8410
17	15	4730-00-122-3969	11083	1B5174
17	16	5306-00-698-2150	11083	L2070
17	17	5306-00-637-4956	11083	0S1588
17	18	5330-00-869-6566	11083	9M9647
17	19	5310-00-470-5567	11083	8M9024
17	20	5306-00-263-7301	11083	0L1351
17	21		11083	4N9372
17	22		11083	4N1413
17	23	5330-01-053-4685	11083	5L2727

CROSS-REFERENCE INDEXES

FIGURE AND ITEM NUMBER INDEX

FIG.	ITEM	STOCK NUMBER	CAGEC	PART NUMBER
17	24	5305-01-015-6841	11083	0S1591
17	25	5340-01-066-5303	11083	4N0914
17	26	2815-01-066-5282	11083	4N0913
17	27	2940-01-053-4677	11083	8N2104
17	28	5305-01-026-9518	11083	0S1571
17	29		11083	6N6143
17	30	5305-00-688-2111	96906	MS90728-63
18	1		11083	4N8734
18	2		11083	4N0513
18	3		11083	4N0512
18	4	5315-00-760-7425	11083	8M8489
18	5		11083	7N2156
18	6	2815-01-053-4622	11083	4N5272
18	7	2815-01-053-4621	11083	4N5270
18	8		11083	7N0286
18	9	3120-00-440-8463	11083	8S6511
18	10		11083	7N0285
18	11	5305-01-026-9518	11083	0S1571
18	12		11083	4N0522
18	13	5305-00-253-7630	11083	1M644
18	14	5310-00-117-4788	11083	5M2894
18	15		11083	4N8816
18	16	5360-00-434-7167	11083	2S2760
18	17	2815-01-053-4700	11083	6N1931
18	18	5306-01-094-9106	11083	0S1590
18	19	5310-00-117-4788	11083	5M2894
18	20	5306-00-285-1368	11083	L1143
19	1		11083	4N8600
19	2	5305-01-015-6841	11083	0S1591
19	3		11083	2P8813
19	4	5305-01-026-9518	11083	0S1571
19	5	5310-00-117-4788	11083	5M2894
19	6	5310-00-251-0088	15564	1377A
19	7	5306-00-423-8194	11083	1A2029
19	8	5330-00-216-8533	11083	2P4305
19	9	4730-01-051-5257	11083	1P4578
19	10		11083	8N1468
19	11	4720-01-062-5930	11083	5P182
19	12		11083	1P1219
19	13	5365-01-067-1426	11083	3S7116
19	14		11083	5S3826
19	15		11083	8N1467
19	16	4720-01-062-5930	11083	5P182
19	17	4730-01-063-0684	11083	3S8573
19	18	5365-01-067-1426	11083	3S7116
19	19		11083	1P1219
19	20	5310-01-097-8955	11083	5P8244
19	21	5305-00-071-2055	96906	MS90728-89
19	22	5330-00-930-5736	11083	8M4986
20	1		11083	4N0729
20	2	2520-01-067-7978	11083	6N8856

CROSS-REFERENCE INDEXES

FIGURE AND ITEM NUMBER INDEX

FIG.	ITEM	STOCK NUMBER	CAGEC	PART NUMBER
20	3	5330-00-599-0936	11083	4F7387
21	1	5305-01-026-9518	11083	0S1571
21	2	5310-00-117-4788	11083	5M2894
21	3	5330-00-216-8533	11083	2P4305
21	4	5310-00-251-0088	15564	1377A
21	5	2940-01-058-8073	11083	2P4303
21	6		11083	7N4519
21	7	5307-01-053-4540	11083	2P4304
21	8	2940-01-053-4642	11083	4N7082
21	9	5305-00-253-5624	96906	MS21318-43
21	10	2940-00-125-9544	11083	2P4005
21	21		11083	2V9302
22	1	2590-00-490-5442	01943	4901-3
22	2	5310-00-251-0088	15564	1377A
22	3	5310-00-117-4788	11083	5M2894
22	4	5340-01-102-7935	11083	7N3047
22	5	5306-00-260-4508	11083	0S1594
22	6	5340-01-102-1788	11083	5L4504
22	7		11083	6N1247
22	8	5306-00-263-4038	11083	2A4639
22	9	5330-01-066-5363	11083	4N0790
22	10	2815-01-049-8552	11083	7S1801
22	11	5306-00-637-4956	11083	0S1588
22	12	2815-01-053-4853	11083	4N4668
22	13	5330-00-691-9950	11083	4F7390
22	14	5340-01-053-4524	11083	2N8109
23	1		11083	8N0897
23	2	4730-01-095-2126	11083	3K846
23	3		11083	8N0808
23	4	5305-01-015-6841	11083	0S1591
23	5	5310-00-117-4788	11083	5M2894
23	6	5306-00-260-4508	11083	0S1594
23	7	2940-01-053-4692	11083	6K8077
23	8		11083	6N1202
23	9	5330-00-431-7140	11083	8M5260
23	10	2940-01-053-4680	11083	4N999
23	11	5340-00-423-8320	11083	1B3057
23	12		11083	6N1251
23	13		11083	6N1249
24	1		11083	4N1675
24	2		11083	4N1676
24	3	5330-01-066-4804	11083	9Y4582
24	4	5365-01-180-8785	11083	2S3770
24	5	5310-00-117-4788	11083	5M2894
24	6	5310-01-020-5126	11083	2N2766
25	1		11083	8N0634
25	2	5330-01-102-1794	11083	4N1230
25	3	5310-01-112-7934	11083	5F7404
25	4	5310-00-186-0975	11083	5F7403
25	5		11083	5P1370
25	6	5365-01-102-2468	11083	4N7183

CROSS-REFERENCE INDEXES

FIGURE AND ITEM NUMBER INDEX

FIG.	ITEM	STOCK NUMBER	CAGEC	PART NUMBER
25	7	5306-01-103-7039	11083	1T720
25	8		11083	8N0936
25	9	5365-00-252-4753	96906	MS16625-1165
25	10		11083	8N0935
25	11		11083	4N1186
25	12		11083	8N0934
25	13	5306-00-226-4832	96906	MS90728-39
25	14	3020-01-102-2390	11083	7N4975
25	15		11083	8N0937
25	16	5310-00-117-4788	11083	5M2894
25	17	5306-00-423-8194	11083	1A2029
25	18	4710-01-298-3307	11083	7N5659
25	19	3120-01-127-5376	11083	4M5317
25	20		11083	5P4479
25	21		11083	4N1720
25	22	5306-00-426-3397	11083	1D4566
25	23	3110-00-144-9793	11083	300061
25	24	3110-00-144-9455	11083	300060
25	25		11083	2P7555
25	26	5365-01-102-2467	11083	5K9065
25	27		11083	8N0938
25	28		11083	2P7554
25	29	5306-00-260-4508	11083	0S1594
25	30		11083	4N1235
25	31	5330-00-506-1475	11083	2K4472
25	32	2815-01-066-4627	11083	4N0848
25	33		11083	5R4411
25	34	5315-01-066-4624	11083	4N0684
25	35		11083	7N8956
25	36	5330-00-167-5174	81349	M83248/2-910
25	37	4730-01-059-9493	11083	3P764
25	38	4730-00-278-0155	11083	9S7722
25	39	5306-00-637-4956	11083	S1588
25	40	5340-01-102-3518	11083	4H3218
25	41		11083	4N8342
25	42	4730-00-244-0606	11083	5K9235
25	43	5306-00-263-7301	11083	0L1351
25	44	5315-01-066-4707	11083	9F7882
25	45		11083	7N1564
25	46		11083	7N1565
25	47	4730-00-647-3207	11083	2N1287
26	1	5306-01-051-0004	11083	5J5793
26	2	3120-01-102-1820	11083	6N3927
26	3		11083	9N5075
26	4	2910-01-066-4742	11083	6N0493
26	5		11083	6N5156
26	6		11083	9N5077
26	7		11083	9N5078
26	8		11083	6N2523
26	9		11083	6N2533
26	10		11083	8H0333

CROSS-REFERENCE INDEXES

FIGURE AND ITEM NUMBER INDEX

FIG.	ITEM	STOCK NUMBER	CAGEC	PART NUMBER
27	1		11083	9N0016
27	2	6680-00-365-5325	11083	9B2232
27	3	5330-01-063-9840	11083	7H9899
27	4		11083	9N3018
27	5	5306-00-226-4825	96906	MS90728-32
27	6	5310-00-167-0721	11083	3F9556
27	7	5340-00-261-4042	11083	9S3032
27	8	5330-00-613-6522	11083	4M8303
28	1		11083	9N3977
28	2		11083	9N3970
28	3		11083	9N3971
28	4	5310-00-432-4064	11083	9M1974
28	5	5310-01-053-4509	11083	1B5354
28	6	2910-01-053-4592	11083	4N2555
28	7	5340-00-519-7036	11083	1P6909
28	8		11083	9N3973
28	9	5325-01-102-1842	11083	6N2944
28	10		11083	9N3975
28	11	5340-01-102-7938	11083	6N2751
28	12		11083	7N0671
28	13		11083	7N0654
28	14	2910-01-104-5155	11083	7N665
28	15	5340-01-102-7937	11083	6N2754
28	16		11083	7N0815
28	17	5340-01-121-0525	11083	7N667
28	18	5330-01-102-3254	11083	8J1688
28	19	5310-00-117-4788	11083	5M2894
28	20		11083	6B8438
28	21	5305-01-015-6841	11083	0S1591
28	22	5330-00-613-6499	11083	1S0004
28	23		11083	7N0672
28	24	2910-01-104-5199	11083	7N668
28	25		11083	7N0655
28	26	5340-01-102-7936	11083	6N1277
28	27	2910-01-053-4585	11083	4N1797
28	28	5330-00-942-5114	11083	8M4437
28	29	5330-00-920-6924	11083	1H1023
28	30	2910-01-053-4578	11083	4N1292
28	31	5310-00-362-8168	11083	4B4277
28	32		11083	9N2481
28	33	5310-01-053-4509	11083	1B5354
28	34		11083	9N5005
28	35	4730-01-053-4825	11083	4N3759
28	36		11083	9N3693
28	37	5330-01-069-4803	11083	5P2060
28	38	2910-01-066-5410	11083	9L6884
28	39		11083	9N3978
28	40		11083	9N3976
28	41	2910-01-104-5200	11083	6N608
28	42		11083	7N0656
28	43		11083	9N3974

CROSS-REFERENCE INDEXES

FIGURE AND ITEM NUMBER INDEX

FIG.	ITEM	STOCK NUMBER	CAGEC	PART NUMBER
28	44		11083	9N3572
28	45	5310-00-264-0115	11083	9S2299
29	1		11083	7N6389
29	2	5306-00-068-0513	96906	MS90727-6
29	3		11083	7N2694
29	4	5315-01-102-3438	11083	6N6955
29	5		11083	7N2693
29	6		11083	4N0903
29	7		11083	4N0904
29	8		11083	4N1572
29	9	5305-00-253-5615	96906	MS21318-21
29	10		11083	9N3938
29	11	5330-00-944-8281	11083	3D2824
29	12	4730-01-064-3790	11083	9S8008
29	13		11083	6N3199
29	14		11083	8H9206
29	15	5330-00-393-4054	11083	3D2992
29	16	5365-00-898-6703	11083	2M4314
29	17	5330-00-858-6277	11083	8H9204
29	18		11083	9N3847
29	19		11083	4N0901
29	20		11083	4N0900
29	21	5365-00-411-4584	11083	9S4191
29	22	5330-00-801-3354	25184	906-737-70
29	23	5306-00-261-1153	11083	S1615
29	24	5310-01-051-2360	11083	5P0537
29	25		11083	4N1634
29	26	5330-01-102-3261	11083	4N1636
29	27	5306-00-226-4827	96906	MS90728-34
29	28		11083	4N0776
29	29		11083	4N0905
29	30	4730-00-924-7886	11083	5M6214
29	31	5330-00-591-3112	11083	5F9144
29	32	5330-00-167-5173	81349	M83248-2-908
29	33		11083	4N0824
29	34		11083	4N0823
29	35		11083	7L8768
29	36	5360-01-026-3098	11083	7L8696
29	37		11083	7L8765
29	38		11083	6N4165
29	39		11083	8N0560
29	40		11083	8N0561
29	41		11083	6N7695
29	42	5305-01-107-4621	11083	6L5897
30	1	2910-01-184-4574	11083	6N7829
30	2	2910-01-096-4344	11083	9L6893
30	3	5360-01-184-6668	11083	7N1208
30	4	5310-01-117-9326	11083	7N1066
30	5		11083	6N7828
30	6		11083	6N7827
30	7		11083	7N4368

CROSS-REFERENCE INDEXES

FIGURE AND ITEM NUMBER INDEX

FIG.	ITEM	STOCK NUMBER	CAGEC	PART NUMBER
30	8	5305-01-108-0649	11083	8H9299
30	9		11083	8S1472
30	10	2910-01-182-7834	11083	9L6892
30	11		11083	6N0024
30	12	4820-01-183-5961	11083	9N0593
30	13		11083	8M1581
30	14		11083	8H1914
30	15		11083	3F6486
30	16		11083	9N0592
30	17		11083	9L6891
30	18	5365-00-074-3608	11083	1M3506
31	1		11083	7N4574
31	2		11083	8N4712
31	3		11083	7N0242
31	4		11083	6N7266
31	5	5315-01-102-1781	11083	9M6970
31	6	5315-01-064-1014	11083	8L6565
31	7	5315-01-107-5309	11083	4N899
31	8	3120-00-854-1068	11083	9S4160
31	9	5315-00-438-7015	11083	1P234
31	10	2910-01-066-7693	11083	1P0232
31	11		11083	6N8441
31	12		11083	4N0359
31	13	5315-00-942-7167	11083	4M1474
31	14	5340-01-107-5458	11083	4N952
31	15	5315-01-107-5310	11083	4N775
31	16	5315-01-102-1782	11083	9L9766
31	17	3110-00-100-6149	96906	MS19059-2412
32	1	5330-01-102-3262	11083	4N1105
32	2	4730-00-924-7886	11083	5M6214
32	3		11083	4N1098
32	4	5330-01-102-3526	11083	4N1104
32	5		11083	4N1091
32	6		11083	2D8576
32	7		11083	4N1095
32	8	5330-01-096-0912	11083	7J204
32	9	5365-01-102-2458	11083	4N7437
32	10	5306-00-260-4508	11083	0S1594
32	11		11083	110-03536
32	12	4720-00-604-6497	84561	4-035-250
32	13	5340-00-875-5251	11083	4H8878
32	14	5310-00-117-4788	11083	5M2894
32	15	5305-00-115-9526	96906	MS18154-58
32	16	4730-00-089-2515	96105	F190034
32	17	5306-00-226-4825	96906	MS90728-32
33	1		11083	4M5477
33	2	5365-00-434-1306	11083	7S4440
33	3	5330-01-049-0553	11083	4N7465
33	4		11083	6N1069
33	5	4820-01-066-8441	11083	8M0874
33	6	5306-00-226-4833	96906	MS90728-40

CROSS-REFERENCE INDEXES

FIGURE AND ITEM NUMBER INDEX

FIG.	ITEM	STOCK NUMBER	CAGEC	PART NUMBER
33	7	5305-01-053-7366	11083	5J5314
33	8	5330-01-102-8388	11083	5P9295
33	9		11083	7N6128
33	10	5330-00-494-2763	11083	6J2419
33	11	5315-00-393-5684	11083	3H1489
33	12	3020-00-459-2656	11083	8S1925
33	13	5310-00-950-0039	96906	MS21044N6
33	14		11083	4N1120
33	15	5330-01-102-8388	11083	5P9295
33	16	5330-01-102-3252	11083	5P9294
33	17		11083	4N7357
33	18	5315-00-999-8416	11083	8H9804
33	19		11083	8F5186
33	20	4030-00-351-7002	11083	7S4433
33	21		11083	4N1121
33	22	2910-00-033-2200	70040	5622759
33	23		11083	4N1119
33	24		11083	4N1116
33	25	5330-00-165-1980	81349	M83248/2-905
33	26		50948	3K8460
34	1	4730-01-051-2312	11083	307942
34	2	5330-00-801-3354	25184	906-737-70
34	3	5310-01-051-2360	11083	5P0537
34	4	5306-00-497-7419	80020	87750-25
34	5	2910-01-178-9971	11083	6N4414
34	6	5306-00-272-1804	11083	182790
34	7	5310-00-432-4064	11083	9M1974
34	8	4730-00-762-2120	11083	2P7214
34	9	5330-01-024-4862	11083	1P0436
34	10		11083	15P2937
34	11	5330-00-952-8008	11083	3J7354
34	12	4720-01-067-6332	11083	9L5158
34	13		11083	6N5453
34	14	5306-00-637-4956	11083	0S1588
34	15	5310-00-117-4788	11083	5M2894
34	16	5310-00-251-0088	15564	1377A
34	17	5305-00-411-0777	11083	1D4572
34	18	5310-00-431-7239	11083	2M849
34	19	5310-00-768-0318	96906	MS51967-14
34	20		11083	6N5454
34	21	5306-00-263-7301	11083	0L1351
34	22		11083	6N5455
34	23		79470	103-20084
34	24	4730-00-647-3207	11083	2N1287
34	25	4730-00-924-7886	11083	5M6214
34	26	4720-01-243-0870	11083	9L6958
34	27	4730-00-491-9576	96906	MS51525-A6
35	1	5305-00-115-9526	96906	MS18154-58
35	2	5310-00-117-4788	11083	5M2894

CROSS-REFERENCE INDEXES

FIGURE AND ITEM NUMBER INDEX

FIG.	ITEM	STOCK NUMBER	CAGEC	PART NUMBER
35	3		11083	6N1671
35	4	5305-01-026-9518	11083	0S1571
36	1	5310-00-432-4064	11083	9M1974
36	2	5306-00-272-1804	11083	1B2790
36	3	5310-01-051-2360	11083	5P0537
36	4	5306-00-497-7419	80020	87750-25
36	5	2910-01-021-1845	11083	4N2511
36	6	5330-01-024-4862	11083	1P0436
36	36		11083	3J1907
37	1		11083	4N6849
37	2	2940-01-304-7134	18265	PCH00-1184
37	3		11083	7S3687
37	4	5305-01-015-6841	11083	0S1591
37	5	5310-00-251-0088	15564	1377A
37	6		11083	7N5973
37	7		08484	HTM250L
37	8	4720-01-104-6442	24161	4625-8506
37	9		11083	6N1519
37	10	5310-00-498-8409	11083	1B5355
37	11		11083	9S1572
37	12		18265	EGB14-0012
37	13		18265	P12-0391
37	14	5330-01-107-5181	18265	P12-0388
37	15	2940-01-072-9417	11083	7W5313
37	16	2940-01-072-9416	11083	1P8482
37	17	2590-01-064-7492	11083	9M3695
37	18	5306-00-452-1354	11083	1T822
37	19	5310-00-117-4788	11083	5M2894
37	20	5330-01-102-3527	11083	1P9390
37	21	5310-01-058-8071	11083	2K4573
37	37	2530-00-933-3305	11083	4K1388
38	1	5330-01-109-6775	11083	4N1848
38	2		11083	8N1845
38	3	5306-00-637-4956	11083	0S1588
38	4	5330-00-074-3773	11083	4L8337
38	5		11083	4N1849
38	6	4730-00-011-2578	44940	502-0153
38	7		11083	4N6971
38	8		11083	6N4651
38	9	2990-01-298-5358	11083	6N4597
38	10		11083	4N6900
38	11	5306-00-118-0108	11083	8M2295
38	12	5330-01-102-1812	11083	8N2431
38	13	5310-00-843-6947	11083	8M2296
38	14	5305-01-107-3550	11083	5P3345
38	15		11083	6N1565
38	16	5306-00-423-8194	11083	1A2029
38	17		11083	4N6970
38	18		11083	4N6926
38	19		11083	8N4056
38	20	5310-00-117-4788	11083	5M2894

CROSS-REFERENCE INDEXES

FIGURE AND ITEM NUMBER INDEX

FIG.	ITEM	STOCK NUMBER	CAGEC	PART NUMBER
38	21	5305-00-688-2111	96906	MS90728-63
38	38	4730-01-200-8433	11083	619258
39	1		11083	4N2494
39	2	4730-01-066-8597	11083	5P3860
39	3	4720-00-028-9929	11083	9S2592
39	4	5306-00-423-8117	11083	0S1595
39	5	5310-00-431-7239	11083	2M849
39	6		11083	1V6566
39	7		11083	1V6565
39	8	2940-00-084-7543	11083	7M1674
39	9	5307-00-067-4895	19207	10935241
39	10	2815-00-994-7407	11083	5L8854
39	11		11083	9L5839
39	12	5306-01-020-9126	11083	2N2765
39	13	5310-01-020-5126	11083	2N2766
39	14		11083	6N4249
39	15		11083	6N4247
39	16	5306-00-263-4038	11083	2A4639
39	17	5310-00-117-4788	11083	5M2894
39	18	5310-00-498-8409	11083	1B5355
39	19		11083	6N4248
39	20	5307-00-053-9023	19207	539023
39	21		11083	8N5527
39	22	5306-00-260-4508	11083	0S1594
39	23	5305-00-688-2111	96906	MS90728-63
39	24	5305-01-015-6841	11083	0S1591
39	25		11083	4N2493
39	26		11083	7N0694
39	27	5330-00-835-1189	11083	2M5173
39	28		11083	9M1869
39	29	5306-00-423-8194	11083	1A2029
40	1		11083	5R4438
40	2	5330-00-924-0048	11083	1S4295
40	3	5310-01-020-5126	11083	2N2766
40	4	5305-01-107-3549	11083	5P7128
40	5	2950-01-267-8489	08179	465694-5002
40	6		08179	408359-5
40	7		08179	400560-775
40	8		08179	408742-53
40	9	5310-00-070-6870	11083	1S1770
40	10		08179	408463-6
40	11	5305-01-256-8504	53711	5979393-1
40	12		08179	408597
40	13		08179	408487-2
40	14		70210	403818
40	15	5365-01-118-8822	08179	408768-1
40	16		08179	404470
40	17	5365-01-020-5721	08179	400424
40	18	3120-01-020-5814	70210	408593
40	19		08179	408906
40	20	5365-00-285-7124	79136	5008-100

CROSS-REFERENCE INDEXES

FIGURE AND ITEM NUMBER INDEX

FIG.	ITEM	STOCK NUMBER	CAGEC	PART NUMBER
40	21		08179	408492-14
40	22		08179	409794
40	23	2950-01-175-3881	08179	408049-4
40	24		08179	408495-10
40	25		08179	408804-35
40	26	5305-00-151-9899	11083	2F808
40	27		08179	408864-0
40	28	5310-00-087-6875	11083	7M9918
40	29		08179	DIV-400579-560
41	1	5305-01-026-9518	11083	0S1571
41	2	5330-00-931-8048	11083	1S6595
41	3		11083	7N2650
41	4	5330-00-989-3295	11083	1S4810
41	5	5306-00-698-2150	11083	L2070
41	6	5340-01-181-0884	11083	2H1743
41	7	5306-00-930-5643	11083	1A9579
41	8	5310-00-432-4064	11083	9M1974
41	9		11083	6N4728
41	10	5306-00-260-4508	11083	0S1594
41	11	5310-00-117-4788	11083	5M2894
41	12	5310-00-251-0088	15564	1377A
41	13		11083	6M7476
41	14	5330-00-167-5174	81349	M83248/2-910
41	15	5330-01-102-3263	11083	4N6672
41	16	2520-00-847-4351	11083	9M4849
41	17		11083	4N9431
41	18		11083	7N2652
42	1	2590-01-222-8738	11083	1V9375
42	2	5940-01-058-9133	11083	4S1988
42	3	6145-01-128-1623	11083	5P668
42	4	5935-01-255-8020	79550	19191
42	5	6145-01-129-9953	11083	5P7030
42	6	5306-00-275-5012	11083	S1566
42	7	5310-00-139-7030	11083	4D3704
42	8	5310-01-113-1308	11083	5S581
42	9		11083	1V2708
42	10		11083	4V6323
42	11	4730-00-011-0667	11083	4H9027
42	12	2910-00-949-0068	11083	3M1588
42	13		11083	3M1836
42	14	2910-00-367-5238	11083	4B5949
42	15	5330-00-143-8713	11083	4B5423
42	16		11083	3M1837
42	17	5330-00-363-9866	11083	2A1763
42	18		11083	1V9808
42	19	2940-00-103-8872	11083	3M1339
42	20	5305-01-102-1785	11083	9F9958
42	21	5315-00-234-1627	34895	10118820
42	22	4010-01-107-7375	11083	9F9959
42	23	2910-01-164-7906	56620	41400
42	24	4730-00-263-3122	11083	3B0551

CROSS-REFERENCE INDEXES

FIGURE AND ITEM NUMBER INDEX

FIG.	ITEM	STOCK NUMBER	CAGEC	PART NUMBER
42	25	2910-00-862-6825	11083	1H8306
42	26	5310-00-007-9861	27315	2045V007
42	27		11083	2V9095
42	28	2910-01-154-6878	11083	1V2751
42	29	5330-00-555-3807	11083	1H8720
42	30	4730-01-254-8683	11083	3B7275
42	31		11083	038747
42	32	5930-01-102-8836	11083	4V6205
42	33	3120-01-127-5376	11083	4M5317
42	34	5940-01-058-9112	11083	4L3916
42	35		71870	33520
42	36	5306-00-455-0460	11083	8S9092
42	37	5365-01-097-9642	11083	6K9800
42	38		11083	1V2709
42	39	5330-00-913-8117	11083	9H8890
42	40	5340-01-156-5479	11083	1V9373
42	41	5310-01-266-2481	11083	4B4278
42	42	5305-00-115-9526	96906	MS18154-58
42	43	5310-00-251-0088	15564	1377A
42	44	5325-01-102-3577	11083	7K6416
42	45	5340-01-116-2640	11083	4B9302
42	46	5310-00-407-9566	96906	MS35338-45
42	47		11083	2V9062
43	1		11083	3V0612
43	2		11083	3V0611
43	3		11083	3V0609
43	4		11083	3V0610
43	5	4730-00-450-3480	11083	6K3607
43	6	5330-00-167-5174	81349	M83248/2-910
43	7		11083	3V0608
43	8		11083	5V1279
43	9		11083	8S9575
43	10		11083	3V0603
43	11		11083	3V0604
43	12	4730-01-066-4619	11083	8M0755
43	13	4730-00-809-9427	96906	MS51500A8-8
43	14	5310-00-407-9566	96906	MS35338-45
43	15	5305-00-688-2111	96906	MS90728-63
43	16		11083	3V0605
43	17		11083	3V0606
43	18	4730-00-903-7652	11083	3R2704
43	19	5340-00-169-8336	11083	4D9517
43	20	4730-00-555-1764	96906	MS51504A8
43	21	5340-00-426-4793	11083	8M2770
43	22	5305-00-115-9526	96906	MS18154-58
43	23		11083	616740
43	24	5330-00-801-3354	25184	906-737-70
43	25	3805-01-053-2703	11083	8M0506
43	26	5975-00-133-8687	96906	MS3367-5-0
44	1	5306-00-496-2234	11083	T642
44	2	5310-00-698-4460	24617	664288

CROSS-REFERENCE INDEXES

FIGURE AND ITEM NUMBER INDEX

FIG.	ITEM	STOCK NUMBER	CAGEC	PART NUMBER
44	3		11083	4V9875
44	4		11083	2V2065
44	5	5330-01-107-5183	11083	2V2156
44	6	5306-00-260-4508	11083	0S1594
44	7	5310-01-094-8810	11083	5P1075
44	8	5310-00-262-2285	12204	853661
44	9	5330-01-107-5187	11083	2V2158
44	10		11083	2V2157
44	11		83355	1-4INNVYLKWASH
44	12	5305-00-068-7837	96906	MS90728-5
44	13	5310-01-108-7537	11083	7S9203
44	14	5365-01-060-2087	11083	3K9042
44	15	5315-01-065-9087	11083	8D5295
44	16	5305-00-068-0506	96906	MS90726-6
44	17		11083	2V0018
44	18	5365-00-721-7680	96906	MS16633-1025
44	19		11083	2V2098
44	20		11083	2V2155
44	21	5365-00-256-2465	79136	5133-37
44	22	5310-01-063-3001	11083	5M1822
44	23		11083	2V2152
44	24		11083	3K6325
44	25		11083	1V9740
44	26		11083	2V2161
44	27	3110-00-930-6289	60380	JTT 1211
44	28		11083	5P4887
44	29	5315-00-409-3703	58312	1M3833-00
44	30	5315-01-109-8115	11083	2V2097
44	31		11083	1V9626
44	32	5315-00-281-9478	80205	NAS561P8-10
44	33	5330-01-088-6106	81349	M83248/2-914
44	34		11083	2V2101
44	35		11083	2V2099
44	36		11083	2V2153
44	37	4730-00-010-3874	11083	2B0858
45	1	5315-01-099-0059	11083	4J5325
45	2	5315-00-839-2326	11083	3B4607
45	3		11083	5F2708
45	4	5305-01-256-8504	53711	5979393-1
45	5	5340-00-363-9858	11083	8B3768
45	6		11083	2V3082
45	7	5310-00-445-4633	11083	9M1311
45	8		11083	2V3078
45	9	5305-00-115-9526	96906	MS18154-58
45	10		11083	6L2479
45	11	5310-00-407-9566	96906	MS35338-45
45	12		11083	2V5687
45	13	5310-00-251-0088	15564	1377A
45	14		11083	2V4370
45	15	5330-01-102-8389	11083	9L8660
45	16	5306-00-814-8988	11083	1B581

CROSS-REFERENCE INDEXES

FIGURE AND ITEM NUMBER INDEX

FIG.	ITEM	STOCK NUMBER	CAGEC	PART NUMBER
45	17		11083	2V2154
45	18		11083	2V2102
45	19	5310-01-095-1247	11083	3D8752
45	20	5340-00-426-4793	11083	8M2770
45	21	5310-01-266-2481	11083	4B4278
45	22	5330-01-102-1808	11083	4N4307
45	23	5310-00-117-4788	11083	5M2894
45	24	5306-00-260-4508	11083	0S1594
45	25		11083	2V5673
45	26	5305-00-115-9526	96906	MS18154-58
45	27		11083	2V5668
46	1	2990-01-107-2418	11083	9N1917
46	2	5330-01-069-4801	11083	5P796
46	3	3120-00-470-5878	11083	1S7984
46	4	5310-00-167-0823	76275	A1638-2
46	5	2910-01-066-4752	11083	3P0009
46	6		11083	1S7336
46	7	3040-01-254-5564	11083	4N0951
46	8		11083	9N1916
46	9	3120-00-237-6951	11083	5M6228
46	10		58312	1S7336-00
46	11	5305-00-068-7837	96906	MS90728-5
46	12		11083	9N2165
46	13	5305-00-071-2505	96906	MS90728-7
47	1		11083	7N6271
47	2	5306-00-260-4508	11083	0S1594
47	3	5330-01-270-1752	11083	8T2604
47	4		11083	9N3363
47	5	3120-00-237-6957	11083	9S0798
47	6		11083	9N3742
47	7	2990-00-116-0423	11083	8M8403
47	8	3120-00-237-6956	11083	8S0134
47	9	5365-00-194-4472	11083	4J7533
47	10	5365-00-194-4472	11083	4J7533
47	11	2990-00-903-6938	11083	8H9181
47	12	5340-01-066-4744	11083	6N3504
47	13		11083	9L6448
47	14	5330-01-102-3260	11083	4N1870
47	15	5365-00-282-5584	80756	RST-143
47	16		11083	6N9040
47	17		11083	6N8780
47	18	3110-01-010-9779	60380	Q-8310
47	19	4730-00-924-7886	11083	5M6214
47	20	5306-00-638-5332	88044	AN101118
47	21	2815-00-352-7415	11083	2F4159
47	22	5330-01-124-2451	99517	A180-119MILP2573 2
47	23	4730-01-064-3790	11083	9S8008
47	24		11083	4N1911
47	25	5340-00-251-3446	11083	9S4673

CROSS-REFERENCE INDEXES

FIGURE AND ITEM NUMBER INDEX

FIG.	ITEM	STOCK NUMBER	CAGEC	PART NUMBER
47	26	2990-00-195-9374	11083	2P8686
47	27	5360-00-081-9031	58312	7M7316-00
47	28	5315-00-952-7737	11083	9M9788
47	29	2990-01-032-7259	11083	9S4466
47	30	5315-00-582-2466	11083	8N984
47	31	5310-00-042-6376	24617	426376
47	32	5310-01-051-2360	11083	5P0537
47	33	5330-01-069-5188	11083	8S5388
47	34	2910-01-050-9982	11083	2P8679
47	35		11083	9N3324
47	36		11083	7N7325
47	37	5330-00-104-6565	11083	5L8991
47	38	5340-00-116-0497	11083	5L8992
47	39	5330-00-202-0890	11083	2P8669
47	40	5310-00-167-0721	11083	3F9556
47	41	5306-00-137-3475	58312	8L4308-00
47	42	5306-00-226-4826	96906	MS90728-33
47	43		11083	2P8707
47	44		11083	2P8632
47	45	3110-00-228-9337	60380	W-430-Q
47	46	5306-01-158-1154	96906	MS18154-41
47	47	5306-00-118-3052	11083	6L1756
47	48	5310-01-038-3645	11083	4B9747
47	49	5305-00-978-9374	11083	9M4704
47	50	5330-00-202-0893	11083	2P8697
47	51	5306-00-226-4832	96906	MS90728-39
47	52	5330-00-858-8224	11083	2J157
47	53	5306-00-426-3189	11083	1B2714
47	54		11083	2N4386
47	55	5305-00-497-0372	11083	8L4155
47	56	5310-00-660-2649	96906	MS35690-424
47	57	2990-00-244-0235	11083	8L4154
47	58		11083	6N8793
48	1		11083	9N3684
48	2	5365-01-097-3237	11083	4N3887
48	3	5340-01-071-2545	11083	6N8629
48	4	5315-01-067-2168	11083	2P8630
48	5	5315-00-139-0178	11083	8M8739
48	6	5310-00-470-5568	11083	9M6302
48	7	5360-00-116-0432	11083	9M6303
48	8		11083	2S0007
48	9	3120-00-118-3007	11083	7M7193
48	10	3110-00-629-4111	11083	7M7219
48	11		11083	6N8195
48	12	5365-01-066-4718	11083	3K0810
48	13	5365-00-804-2025	96906	MS16624-1087
48	14	5330-01-102-8390	11083	5P5601
48	15		11083	6N1947
48	16		11083	4N1807
48	17	2910-01-066-4732	11083	4N0820
48	18	5330-01-102-4354	11083	5P9757

CROSS-REFERENCE INDEXES

FIGURE AND ITEM NUMBER INDEX

FIG.	ITEM	STOCK NUMBER	CAGEC	PART NUMBER
48	19	2990-00-116-0440	11083	8N6979
48	20		11083	7N2351
48	21	2815-00-423-8767	11083	2A5328
48	22	5310-00-660-1938	18876	9072391
48	23		11083	9N3323
48	24		11083	7N4555
48	25	3110-01-145-6202	60380	C-434-Q
48	26		11083	6N2501
48	27	5306-01-108-3741	11083	7L6210
48	28	5310-00-432-4064	11083	9M1974
48	29		11083	7N4554
48	30	5315-01-113-2356	11083	9M2089
48	31		11083	7N0579
48	32	5315-01-102-3437	11083	6N3175
48	33		11083	7N4553
48	34	5315-01-107-5308	11083	4N898
48	35	5330-01-124-2451	99517	A180-119MILP2573 2
48	36	4730-01-064-3790	11083	9S8008
48	37		11083	9L6509
48	38	5365-01-103-1656	11083	4N1913
48	39		11083	6N8783
49	1	5360-01-053-7350	11083	4N4267
49	2	5305-00-071-2505	96906	MS90728-7
49	3	5340-00-116-0412	11083	9M6292
49	4	2910-00-116-0407	11083	8M9062
49	5	5970-00-213-7747	58312	1P6452-00
49	6	2910-00-226-8862	11083	4N4218
49	7	3040-01-032-3129	11083	3S0602
49	8	5365-01-103-7156	11083	9L7235
49	9	2910-00-137-2004	11083	2S7391
49	10	2990-01-070-8548	11083	1P9958
50	1		11083	6N6209
50	2	5306-01-097-7744	11083	4N8112
50	3	5310-00-407-9566	96906	MS35338-45
50	4	5310-01-051-0012	11083	8F7242
50	5	4730-00-647-3207	11083	2N1287
50	6	4720-01-243-0871	11083	6N3169
50	7	5330-00-202-0882	11083	2P8643
50	8	2910-01-182-7836	11083	6N0651
50	9	5306-00-261-1153	11083	S1615
50	10	5310-01-107-5172	11083	9S5282
50	11		11083	6N7148
50	12	5330-00-105-0356	11083	6L5766
50	13	2910-01-050-9980	11083	2P8226
50	14	5360-01-068-0037	11083	6N0513
50	15	5330-00-436-3369	11083	4J2506
50	16	5315-01-102-3440	11083	7N5715
50	17	2910-00-549-4799	11083	2P8939
50	18	5310-01-051-0012	11083	8F7242
50	19	5306-00-226-4826	96906	MS90728-33

CROSS-REFERENCE INDEXES

FIGURE AND ITEM NUMBER INDEX

FIG.	ITEM	STOCK NUMBER	CAGEC	PART NUMBER
50	20	5306-00-402-9168	11083	S1347
50	21	5310-01-050-9984	11083	2P8803
50	22		11083	2P8804
50	23	2910-01-050-9985	11083	2P8875
50	24	5360-01-068-0038	11083	6N0515
50	25	5360-01-103-3721	11083	7N209
50	26	2910-01-050-9983	11083	2P8801
50	27	5330-00-205-3582	11083	2P8234
50	28	2910-01-050-9979	11083	2P8225
50	29		11083	6N0593
50	30	5330-00-202-1468	11083	3P1979
51	1	2910-01-184-7087	11083	6N1044
51	2	5310-00-882-8876	11083	8H2807
51	3	5310-00-595-6378	80020	A87769-10
51	4	2910-01-053-4695	11083	6N1045
51	5		11083	6N0953
51	6	2910-00-033-2200	70040	5622759
51	7	2910-01-051-2299	11083	1L3769
51	8	2910-00-989-3388	81321	6663636
51	9	5365-00-715-1152	11083	2H3429
51	10	5340-00-999-3230	11083	7H9678
51	11	5360-00-116-0448	11083	7S9323
51	12	5330-00-585-4284	11083	8H2778
51	13	2910-00-116-3227	11083	8H2810
52	1		11083	4N1981
52	2		11083	8N0444
52	3		11083	8N1465
52	4	5307-01-051-2364	11083	9S4167
52	5	2910-01-051-2341	11083	4N5823
53	1		17627	QA9-1TC
53	2		11083	8N4052
53	3	5306-00-263-7301	11083	0L1351
53	4	5310-00-117-4788	11083	5M2894
53	5	5340-01-102-1790	11083	6S5992
53	6	5325-01-114-5106	11083	4D623
53	7		30780	SK10-2275-1JG
53	8		11083	8N4051
53	9	5306-00-260-4508	11083	0S1594
53	10	4730-00-289-1243	79470	681X2
53	11		79470	102-15102
53	12		79470	102-10102
53	13	5306-00-226-4825	96906	MS90728-32
53	14	5310-00-432-4064	11083	9M1974
53	15		53203	QS5-2CT
53	16		11083	8N4054
53	17		53203	300-450
53	18		11083	7N296
54	1	4720-01-053-4633	11083	4N5962
54	2	4730-00-908-3193	96906	MS35842-12
54	3	5310-00-251-0088	15564	1377A
54	4	5310-00-117-4788	11083	5M2894

CROSS-REFERENCE INDEXES

FIGURE AND ITEM NUMBER INDEX

FIG.	ITEM	STOCK NUMBER	CAGEC	PART NUMBER
54	5	4720-00-423-1001	11083	5B9407
54	6	5305-00-115-9526	96906	MS18154-58
54	7	5340-01-209-7389	11083	9L1775
54	8	4730-01-053-4546	11083	2S2053
54	9		11083	5R4391
54	10		11083	5R4392
55	1		17284	AEM00-1287
55	2	5340-01-246-1861	11083	8S1460
55	3	5310-00-828-7334	11083	1B5357
55	4	5306-00-263-8978	11083	S1587
55	5	5310-00-828-7334	11083	1B5357
55	6	5340-01-246-1861	11083	8S1460
55	7	5306-00-273-6357	11083	1A1460
55	8	2990-01-200-9098	11083	7W8445,4P1471, 2 EA 5P0597
55	9	5307-00-067-4895	19207	10935241
56	1		11083	7N6651
56	2	5330-00-931-8011	11083	5S4629
56	3	2930-00-930-9098	11083	5S1213
56	4	5340-00-246-2746	11083	5S1211
56	5	5306-00-458-1930	11083	5S5080
56	6	5310-00-432-4064	11083	9M1974
56	7	6620-00-912-9151	11083	5S1218
56	8	4730-00-924-7886	11083	5M6214
56	9	2930-00-852-1174	11083	7S7809
56	10		11083	7S7808
56	11	5330-01-058-9176	11083	2P3230
56	12		11083	2S2846
56	13		11083	9S9979
56	14		11083	7S7807
56	15	5307-01-066-0525	11083	1S0286
56	16	5306-00-260-4508	11083	0S1594
56	17	5310-00-117-4788	11083	5M2894
56	18	5330-01-058-9177	11083	4N1418
56	19	5306-00-637-4956	11083	0S1588
56	20		11083	6N5442
56	21	5330-01-059-0961	11083	4N1419
56	22	5306-00-423-8117	11083	0S1595
56	23	5305-00-008-5971	11083	8S9089
56	24	5330-00-982-9541	11083	9M3116
56	25	5365-01-102-2459	11083	6N9590
56	26	5306-00-285-1368	11083	L1143
56	27	4730-00-931-8501	11083	9M2793
56	28	4730-00-555-1764	96906	MS51504A8
56	29	4720-01-101-7196	11083	6N9256
56	30		11083	16842
56	31	5340-01-051-2311	11083	3S8664
56	32	4720-01-101-2715	11083	6N9255
56	33	4730-00-809-9427	96906	MS51500A8-8
56	34	4730-01-063-8263	11083	8M0547
56	35	5340-01-026-9553	11083	5P0598

CROSS-REFERENCE INDEXES

FIGURE AND ITEM NUMBER INDEX

FIG.	ITEM	STOCK NUMBER	CAGEC	PART NUMBER
56	36	4720-01-106-4290	24161	4177-8529
56	37	4730-01-106-7246	08484	HTM-350
56	38	4720-01-059-9327	11083	4N7431
56	39		11083	7N6650
56	40	2930-01-303-5756	11083	6N5636
56	41		11083	6N5635
56	42	5306-00-263-7301	11083	0L1351
56	43		11083	6N5440
57	1	2930-01-242-8046	11083	8N5542
57	2		11083	4N7587
57	3		11083	4N7584
57	4	2510-01-184-0559	11083	7N4051
57	5	5306-01-094-9106	11083	0S1590
57	6	5310-00-117-4788	11083	5M2894
57	7		11083	6N9775
57	8	5330-01-102-3266	11083	6N4942
57	9	5305-01-015-6841	11083	0S1591
57	10		11083	6N5485
57	11		11083	7N4054
57	12		11083	7N8442
57	13		11083	8N5411
57	14	5310-00-251-0088	15564	1377A
57	15		11083	8N0335
57	16		11083	4N7583
57	17	2510-01-184-0560	11083	7N4039
57	18		11083	6N5634
57	19		11083	6N5639
57	20		11083	6N0414
57	21		11083	8N4971
57	22	5330-01-102-1813	11083	6N4941
57	23	5305-01-026-9518	11083	0S1571
58	1	5930-01-104-2202	11083	7N3606
58	2	5306-00-226-4826	96906	MS90728-33
58	3	5310-00-432-4064	11083	9M1974
58	4	5330-01-063-9839	11083	4N3841
59	1		11083	6N0008
59	2	5365-00-182-3868	11083	5F0149
59	3		11083	6N7145
59	4	5330-01-102-3264	11083	4N1946
59	5	5330-01-053-4833	11083	4N1156
59	6	6620-01-123-1332	78493	4L313-3
59	7	2930-01-053-4603	11083	4N0362
59	8	5330-00-246-6380	58312	3S9643-00
59	9	2930-00-633-8046	11083	2H1193
59	10		11083	6N2194
59	11	4730-00-089-2515	96105	F190034
59	12	5306-00-426-2932	11083	0S1619
59	13	5330-01-066-5363	11083	4N0790
59	14		11083	4N1799
59	15	5306-00-637-4956	11083	0S1588

CROSS-REFERENCE INDEXES

FIGURE AND ITEM NUMBER INDEX

FIG.	ITEM	STOCK NUMBER	CAGEC	PART NUMBER
59	16	5330-00-968-5388	11083	4F8824
59	17	4730-00-924-7886	11083	5M6214
59	18		11083	6N1410
59	19	5306-00-260-4508	11083	0S1594
59	20	5306-00-285-1368	11083	L1143
59	21		11083	9N3312
59	22	5305-00-781-3929	96906	MS90728-75
59	23	5330-01-053-4684	11083	5K5959
59	24		11083	6N1412
59	25	5330-00-886-2777	11083	2H3927
59	26		11083	6N1413
59	27		11083	6N1411
59	28		11083	4N8451
59	29	5330-00-931-2219	11083	7F2122
59	30	5305-00-688-2111	96906	MS90728-63
59	31		11083	4N2198
59	32	5330-01-102-3265	11083	4N2199
59	33		11083	4N2380
59	34	5306-00-423-8194	11083	1A2029
59	35	4730-00-427-5121	11083	3J5390
59	36		11083	7N7642
59	37	4730-00-263-3122	11083	3B0551
59	38	5330-01-107-1248	11083	4N864
59	39	5310-00-117-4788	11083	5M2894
59	40	2815-01-050-8003	11083	4N0794
60	1		11083	4N1951
60	2		11083	4N7498
60	3	5330-01-053-4686	11083	5P1713
60	4	2930-01-066-4740	11083	7W1821
60	5	3110-00-144-8542	11083	1B3867
60	6	5365-01-053-4523	11083	2N7942
60	7	3110-00-293-9302	11083	2L5271
60	8	5306-00-226-4829	96906	MS90728-36
60	9	5330-01-102-3562	11083	9N3033
60	10		11083	4N1948
60	11	2930-01-053-4539	11083	2P3696
60	12	5305-00-724-7222	96906	MS90728-164
60	13		11083	4N1956
60	14	4730-00-924-7886	11083	5M6214
60	15	4730-00-924-7125	11083	4M1336
60	16		11083	4N1941
60	17	4330-01-203-1250	11083	4N5834
60	18	5315-01-069-0755	11083	5H8985
60	19	5305-01-015-6841	11083	0S1591
60	20	5310-00-999-8288	11083	9M6527
60	21	2930-01-101-2690	11083	4N1751
60	22	5330-01-097-8142	11083	6N9312
60	23	5365-00-432-8183	11083	8S7762
60	24	5330-00-431-7137	11083	8S8821
60	25	5330-[illegible]-929-5507	11083	4S5898
60	26	5306-00-260-4508	11083	0S1594

CROSS-REFERENCE INDEXES

FIGURE AND ITEM NUMBER INDEX

FIG.	ITEM	STOCK NUMBER	CAGEC	PART NUMBER
60	27	5310-00-251-0088	15564	1377A
60	28	5330-00-074-3771	11083	5L5032
60	29		11083	4N5835
60	30	5330-00-541-2704	11083	5H5672
61	1		11083	6N5270
61	2		11083	6N5269
61	3	5315-00-362-7367	11083	5B5812
61	4		80657	11BA011636
61	5		11083	1P9946
61	6	2990-01-050-8011	11083	1S9209
61	7	5310-00-431-7239	11083	2M849
61	8	5306-00-273-6357	11083	1A1460
61	9	2910-00-309-9473	11083	0T0573
61	10	2930-01-050-8058	11083	4N8596
61	11	2930-01-050-8012	11083	2P1757
61	12	5310-00-251-0088	15564	1377A
61	13	2930-01-050-8013	11083	2P2243
61	14	3110-00-555-5207	11083	3L1425
61	15	5330-00-862-6861	11083	9F4446
61	16	5365-01-108-0400	11083	7N2900
61	17	5306-01-107-5159	11083	5P7979
61	18		11083	7N3629
61	19	3110-00-516-5490	02432	ATU47
61	20	5330-00-498-2905	11083	5S2106
61	21	5365-00-498-2920	11083	5S9062
61	22	3030-01-118-7494	11083	6N7053
61	23	5306-00-637-4956	11083	0S1588
61	24	5310-00-117-4788	11083	5M2894
61	25	4730-00-172-0028	96906	MS15003-4
61	26		11083	6N4111
61	27	4730-01-068-6081	11083	6L3616
61	28	5340-01-102-1789	11083	7D1728
61	29		11083	6N5675
61	30	4730-00-013-7397	11083	4B8756
61	31	4710-01-062-3719	11083	5P0189
61	32	4730-00-496-7511	11083	9S7720
62	1		11083	7N2345
62	2		11083	6N5339
62	3	5306-00-263-8978	11083	S1587
62	4	5310-00-431-7239	11083	2M849
62	5	5306-00-263-7301	11083	0L1351
62	6	5310-00-117-4788	11083	5M2894
63	1	5306-00-275-5012	11083	S1566
63	2		11083	6N5300
64	1	4730-00-924-7886	11083	5M6214
64	2		11083	7N5959
64	3	5310-00-768-0318	96906	MS51967-14
64	4	5310-00-431-7239	11083	2M849
64	5		11083	2S6689
64	6	5315-00-839-5822	96906	MS24665-353
64	7	5315-00-498-4657	11083	0S0175

best copy available

Reproduced from poor document.

CROSS-REFERENCE INDEXES

FIGURE AND ITEM NUMBER INDEX

FIG.	ITEM	STOCK NUMBER	CAGEC	PART NUMBER
64	8	5340-00-241-7055	11083	2M2742
64	9	5310-00-117-4788	11083	5M2894
64	10	5306-00-263-7301	11083	0L1351
64	11	3020-01-243-1044	11083	6N3641
64	12	5365-00-205-4711	11083	8B2327
64	13	3110-00-144-8518	11083	6B1124
64	14	5310-00-285-8867	78286	S14-35-5017
64	15	5305-00-115-9526	96906	MS18154-58
64	16	5330-00-948-2300	11083	2S6151
64	17	2930-00-402-8215	11083	2S6150
64	18	5306-00-226-4827	96906	MS90728-34
64	19	5365-01-050-8010	11083	1S8687
64	20	5330-00-950-8223	11083	5M9735
64	21	4730-00-172-0028	96906	MS15003-4
64	22		11083	6N3765
64	23		03199	82154
64	24		11083	6N3766
64	25		80657	11BA011636
64	26		11083	8N4550
65	1	5305-00-071-2055	96906	MS90728-89
65	2	5310-01-097-8955	11083	5P8244
65	3	4730-01-051-5257	11083	1P4578
65	4	5330-00-613-6519	11083	4J0522
65	5	5330-00-613-6516	11083	4J0520
65	5	5330-01-106-7288	81349	M83248/2-218
65	6	4730-01-051-5256	11083	1P4577
65	7	5310-00-117-4788	11083	5M2894
65	8	5306-00-637-4956	11083	0S1588
65	9		11083	3V0188
65	10	4730-01-051-7601	11083	3S8503
65	11	3120-00-236-1319	11083	3S7252
65	12	4720-00-981-8519	11083	8S9355
65	13	4730-01-242-6344	11083	8S3918
65	14		32705	307951
65	15	2590-00-930-9407	11083	7M8485
65	16		11083	9J4682
65	17		11083	9J4683
65	18		57711	1720-253
65	19		11083	9J3493
65	20	2590-00-930-9407	11083	7M8485
65	21		11083	9J4751
65	22		11083	9J3517
65	23	4730-01-066-7651	11083	307935
65	24		11083	3V0189
65	25	4730-01-242-6344	11083	8S3918
65	26	4720-00-981-8519	11083	8S9355
65	27	3120-00-236-1319	11083	3S7252
65	28	4730-01-051-7601	11083	3S8503
65	29	5310-00-251-0088	15564	1377A
65	30		11083	2V2691
65	31		11083	3V0190

CROSS-REFERENCE INDEXES

FIGURE AND ITEM NUMBER INDEX

FIG.	ITEM	STOCK NUMBER	CAGEC	PART NUMBER
65	32	5306-00-423-8194	11083	1A2029
65	33	4720-01-026-9540	11083	5P2094
65	34		11083	5P181
65	35		11083	3V0172
65	36		11083	3V0165
65	37		11083	1P5795
65	38	5330-01-124-2451	99517	A180-119MILP2573 2
65	39	5365-00-478-2920	11083	9S4183
65	40	5330-01-043-5565	11083	1P3703
65	41	5306-00-285-1368	11083	L1143
65	42	5310-00-407-9566	96906	MS35338-45
65	43		11083	6K5535
65	44		11083	6K5536
65	45	5306-00-263-7301	11083	0L1351
65	46		11083	3V0423
65	47		11083	3V0166
65	48	5310-00-431-7239	11083	2M849
65	49		11083	3V0191
65	50		11083	3V0403
65	51		11083	3V0163
65	52		11083	5R4456
65	53	5306-00-423-8117	11083	0S1595
65	54	5310-01-097-6720	11083	5P1076
65	55		11083	5R4480
65	56	5306-00-426-2865	11083	L1352
65	57		11083	2V3785
65	58		11083	9S9724
65	59	5340-01-051-6767	11083	3S7166
65	60	4720-01-051-6773	11083	9S247
65	61		11083	5S3049
66	1	5310-00-117-4788	11083	5M2894
66	2	5306-00-423-8194	11083	1A2029
66	3	5306-00-426-3397	11083	1D4566
66	4	5310-00-431-7239	11083	2M849
66	5	5365-01-129-5895	11083	1P5411
66	6	5365-01-129-5894	11083	1P5412
66	7		11083	2P6104
66	8	5310-01-108-7538	11083	1J8965
66	9	5310-00-768-0318	96906	MS51967-14
66	10	3040-00-491-3215	11083	9M8867
66	11	5340-00-971-4820	11083	3H8726
66	12	5306-00-809-7134	11083	2B947
66	13	5306-00-698-2150	11083	L2070
66	14		46529	A183073
66	15	4730-00-924-7886	11083	5M6214
67	1	4820-01-096-5062	93061	V405P-6-6
67	2	4730-00-835-3003	96906	MS51504A6-6
67	3	4720-01-067-6332	11083	9L5158
67	4	2920-01-058-9099	11083	3S2093
67	5		30780	6CBTXS

CROSS-REFERENCE INDEXES

FIGURE AND ITEM NUMBER INDEX

FIG.	ITEM	STOCK NUMBER	CAGEC	PART NUMBER
67	6	4730-00-322-8457	79470	C5205X6X6
67	7	4730-00-427-5121	11083	3J5390
67	8	2520-01-184-1042	11083	9N3668
67	9	5315-01-102-3441	11083	9N3645
67	10		11083	9N3667
67	11	2940-01-117-5552	37099	LFW2055
67	12	5305-01-015-6841	11083	0S1591
67	13	5310-00-117-4788	11083	5M2894
67	14	5310-00-251-0088	15564	1377A
68	1	5305-00-724-7221	96906	MS90728-163
68	2	5310-00-139-7030	11083	4D3704
68	3		11083	5H0837
68	4	4310-01-063-0729	11083	1S4698
68	5	5310-00-208-9485	11083	1D5118
68	6	4130-01-054-5311	11083	8S5383
68	7	5306-00-263-8978	11083	S1587
68	8	5310-00-431-7239	11083	2M849
68	9	2920-00-231-7270	16764	1117248
68	10	5306-00-273-6357	11083	1A1460
68	11	5305-00-071-2069	96906	MS90728-113
68	12	5305-00-724-7221	96906	MS90728-163
68	13		11083	6N9366
68	14	5305-00-225-3843	96906	MS90728-8
68	15	5310-00-117-4788	11083	5M2894
68	16		11083	6N9364
68	17	5306-00-423-8117	11083	0S1595
68	18	5306-00-470-5543	11083	8S9191
68	19	5305-01-026-9518	11083	0S1571
68	20	5305-00-964-0503	96906	MS90728-78
68	21		11083	4N6413
68	22	3030-01-030-4369	11083	9L6639
68	23	3020-01-053-4659	11083	4N8225
69	1	2920-01-053-4745	16764	1969001
69	2		11083	9S2544
69	3	5310-01-066-0689	11083	8H0878
69	4	5305-00-090-4227	11083	9S2438
69	5	5310-00-811-2861	11083	7H2079
69	6	2920-01-053-4744	16764	1969000
69	7	5330-00-429-3570	16764	1970395
69	8	2920-00-484-2799	16764	1968988
69	9	5305-01-053-4758	11083	9S9830
69	10	5310-00-450-0414	11083	8F1326
69	11	5310-00-559-0070	11083	9B7233
69	12	5305-00-090-4274	16764	1961570
69	13	5310-00-010-3092	24617	103092
69	14		16764	3T1888
69	15	5325-00-031-3336	16764	1968996
69	16	6150-01-195-8726	16764	1892960
69	17	5340-01-167-4216	16764	1876813
69	18	3120-00-432-8120	16764	1968990
69	19	3110-01-099-8007	11083	5P3418

CROSS-REFERENCE INDEXES

FIGURE AND ITEM NUMBER INDEX

FIG.	ITEM	STOCK NUMBER	CAGEC	PART NUMBER
69	20	3110-01-098-0000	11083	5P3419
69	21		11674	1969133
69	22		11674	1971465
69	23		11674	1968901
69	24		11674	1968900
69	25		11674	1969671
69	26	5307-00-026-3776	16764	1969002
69	27	5305-00-450-0421	11083	9S2007
69	28	5970-00-001-9382	16764	1968930
69	29	2920-00-427-6421	16764	1971670
69	30	5970-00-403-5912	16764	1959389
69	31	5310-00-952-0561	11083	9S2247
69	32	5310-00-432-8001	11083	4B4863
69	33	5305-00-090-4204	11083	9S2542
69	34	5305-00-090-4147	11083	9S2437
69	35	2920-00-231-7385	16764	1968904
69	36	5305-00-450-0420	11083	9S2008
69	37	2930-01-099-4405	16764	1969481
69	38	5310-00-944-5896	16764	9418881
69	39	5310-00-262-4715	11083	7F7621
69	40	2920-01-053-4743	16764	1968891
69	41	2920-01-053-4782	16764	1968890
69	42	5330-00-237-6928	11083	9S2391
69	43	5305-00-450-0422	11083	9S2009
69	44	5310-00-852-8266	11083	3B4502
69	45	2920-01-053-4541	16764	1852726
69	46	3110-00-144-8519	11083	2F5721
69	47		11674	1968885
69	48	5330-01-053-4844	11083	9S2256
69	49		11674	1970407
69	50	5330-00-237-6928	11083	9S2391
69	51	5305-01-053-4742	11083	9S2011
69	52		83355	1-4INVVYLKWASH
70	1		11674	1990272
70	2	5945-00-445-0865	16764	1115563
70	3	5306-00-550-3023	16764	1930611
70	4		16764	1948522
70	5	5310-00-062-2051	16764	1948519
70	6	9390-00-839-1864	16764	801077
70	7	5310-00-822-2236	16764	1948520
70	8	5360-00-812-0196	16764	1948521
70	9	5310-00-822-2241	16764	1948526
70	10	5365-00-715-1152	16764	9415235
70	11	5310-00-965-6000	16764	9412305
70	12	6110-00-757-7187	16764	1945484
70	13		16764	1948529
70	14	5330-01-053-2907	16764	1894643
70	15	5330-01-053-7021	16764	1894642
70	16	5330-00-869-3369	16764	1933111
70	17		16764	1945356
70	18	5306-00-550-9129	16764	1914869

CROSS-REFERENCE INDEXES

FIGURE AND ITEM NUMBER INDEX

FIG.	ITEM	STOCK NUMBER	CAGEC	PART NUMBER
70	19		16764	9121427
70	20	2920-01-207-9671	16764	1979870
70	21	5330-01-024-9686	16764	1945860
70	22	2920-00-999-2527	16764	1936466
70	23	2920-00-993-4233	16764	1945853
70	24		16764	1914873
70	25		16764	1869747
70	26	5305-00-758-8117	16764	1964294
70	27	5940-00-999-2534	16764	1950561
70	28	5970-00-657-8133	16764	1965472
70	29	5310-00-719-5470	16764	1922457
70	30	5310-00-167-0839	88044	AN960-816L
70	31	5310-00-584-5272	02978	ERNA245
70	32	5935-00-401-7527	16764	1953238
70	33	5310-01-118-2476	16764	1979451
70	34		16764	1955989
70	35	2590-01-140-9058	16764	1979600
70	36	5330-00-914-0703	16764	1964857
70	37	2920-00-838-9344	16764	1945840
70	38	5310-00-297-7319	16764	1911644
70	39	5330-00-976-4695	16764	1945476
70	40	2920-01-138-7194	16764	1976884
70	41	2920-01-138-7045	16764	1957846
70	42	5306-00-783-5183	16764	1948536
70	43	5306-00-783-5188	16764	1948537
70	44	5977-01-138-7043	16764	1985066
70	45	5310-00-827-2821	16764	1953237
70	46	5310-00-292-2188	16764	1861791
70	47	2920-01-138-7046	16764	1945848
70	48	2920-00-100-3403	16764	1851632
70	49	5310-00-167-0839	88044	AN960-816L
70	50	5310-00-584-5272	02978	ERNA245
70	51	5310-01-178-0069	16764	9441934
70	52	5306-00-550-9129	16764	1914869
71	1	2920-01-107-7533	81983	W-1060-2
71	2	5330-00-116-0429	11083	8L3873
71	3	5360-01-102-3521	11083	7N9845
71	4	5310-00-975-2075	96906	MS35691-21
71	5	5306-01-297-1055	11083	6N4241
71	6		11083	5P4278
71	7		11083	6K1828
71	8	6145-01-229-2077	11083	6A3626
71	9		11083	5P6725
71	10	6145-01-229-2077	11083	6A3626
71	11		11083	6K1827
71	12	5940-00-143-4780	96906	MS25036-108
72	1	5365-00-763-0120	11083	9S4185
72	2	5330-00-167-5173	81349	M83248-2-908
73	1	6620-01-098-9865	70040	6464584
73	2	5340-00-426-4793	11083	8M2770
73	3	5305-00-115-9526	96906	MS18154-58

CROSS-REFERENCE INDEXES

FIGURE AND ITEM NUMBER INDEX

FIG.	ITEM	STOCK NUMBER	CAGEC	PART NUMBER
73	4	5310-00-117-4788	11083	5M2894
73	5	5340-00-426-4803	11083	8M2772
73	6	5340-01-098-6683	11083	3S8665
73	7	6620-01-098-9866	70040	6464585
73	8		11083	3B747
73	9		17335	5404-6-4
73	10	6685-01-102-1652	70040	8992917
73	11		11083	5R4562
73	12	6145-00-600-6052	81349	M22759/11-16-0
73	13	5940-01-303-4978	11083	5P1475
73	14	6685-01-107-7540	11083	7D8936
73	15	5930-01-151-4767	11083	4N4696
73	16	3120-01-127-5376	11083	4M5317
73	17	4730-00-595-0385	79470	C3409X4
73	18	4730-01-059-9493	11083	3P764
73	19	5330-00-167-5174	81349	M83248/2-910
73	20	5930-01-101-7845	11083	6N5899
73	21	4730-00-193-0871	11083	3B7255
74	1		11083	5R4570
74	2	5940-01-087-0285	00779	53245-1
74	3	5940-01-303-4978	11083	5P1475
74	4	5940-01-097-3578	11083	6N9587
74	5	5940-00-291-0085	79550	2863
74	6	5940-00-113-9826	96906	MS25036-114
74	7	5935-01-118-8884	11083	5P3160
74	8	5940-00-118-8836	11083	2L8054
74	9	5940-00-688-7204	00779	32975
74	10	5935-01-119-1467	11083	5P3175
74	11	5365-01-107-3893	79550	15784
74	12		77060	8900186
74	13	5940-01-293-7470	11083	9D2828
74	14	5940-00-143-4793	96906	MS25036-110
75	1		11083	1V4865
75	2	6210-01-172-5974	72619	81-5710-01-403
75	3		11083	5P5902
75	4	6240-00-155-8707	11083	7N9967
75	5	2590-01-301-0256	11083	1V8111
75	6	6210-00-941-5863	72619	52-3192-003
75	7	5310-00-187-7070	78189	1206-00
75	8	5945-00-853-2063	94988	625
75	9		11083	1V7383
75	10	5305-01-102-7326	11083	2S6218
75	11		37086	34-7396
75	12	5925-00-890-5035	11083	9M9085
75	13		11083	2V7571
75	14	5310-00-010-3092	24617	103092
75	15	5310-00-559-0070	11083	9B7233
75	16	5305-01-102-7325	11083	4B1222
75	17		11083	9S4968
75	18	5305-00-005-0896	11083	5M6668
75	19	5315-01-103-1897	11083	3D9779

CROSS-REFERENCE INDEXES

FIGURE AND ITEM NUMBER INDEX

FIG.	ITEM	STOCK NUMBER	CAGEC	PART NUMBER
75	20		11083	4B4274
75	21	5310-00-596-7691	96906	MS35335-32
75	22		11083	6H5430
75	23	5930-01-118-6366	11083	1V7362
75	24		11083	7N4033
75	25	6645-01-149-9176	11083	9W1491
75	26	5940-01-058-9133	11083	4S1988
75	27	5940-01-058-9112	11083	5P4571
75	28	6210-00-941-5863	72619	52-3192-003
75	29	5920-00-118-8195	71400	HKP-LW-HH
75	30	5920-00-012-0151	81349	F02A32V15A
75	31		71607	9784-112
75	32	5930-00-683-1628	96906	MS24523-22
75	33	5930-01-153-2396	11083	7N8000
75	34		14726	H116
75	35		11083	2V6767
75	36	6210-01-200-0788	72619	52-3191-003
75	37	5305-01-097-9388	11083	4S4465
75	38		11083	1H3244
76	1	5940-01-303-4978	11083	5P1475
76	2	5940-01-285-5146	79550	412026
76	3	5935-01-118-8884	79550	19189C
76	4	5940-01-058-9112	11083	5P4571
76	5	5940-01-103-6808	11083	5P5694
76	6		44655	995-5B-180
76	7	5999-01-119-5999	00779	583362-3
76	8		00779	583301-1
76	9	5940-01-058-9112	11083	4L3916
76	10	5940-00-432-2660	97403	13216E6191-3
77	1		11083	5R4558
77	2	6210-00-941-5863	58854	30122-0
77	3	6240-00-155-8707	11083	7N9967
77	4		11083	5P5902
77	5		11083	5V3768
77	6	6240-00-155-7866	96906	MS15573-3
77	7	6210-01-172-5974	72619	81-5710-01-403
77	8		11083	2V7571
77	9	5310-00-187-7070	78189	1206-00
77	10	5310-00-852-5199	11083	4B2040
77	11		11083	330369
77	12		11083	335786
77	13	5940-00-143-4794	96906	MS25036-112
77	14		11083	6H5430
77	15	5310-00-596-7691	96906	MS35335-32
77	16	5310-00-251-0088	15564	1377A
77	17	5310-01-094-8810	11083	5P1075
77	18	5310-00-413-5060	11083	3K925
77	19	6685-01-097-2058	70040	8992440
77	20		16476	07350-61
77	21	6210-01-097-1973	72619	52-3193-003
77	22	5930-01-097-4307	11083	7N8009

CROSS-REFERENCE INDEXES

FIGURE AND ITEM NUMBER INDEX

FIG.	ITEM	STOCK NUMBER	CAGEC	PART NUMBER
77	23	5920-00-118-8195	71400	HKP-LW-HH
77	24	5920-00-879-6285	81349	F02A125V10AS
77	25	5930-00-132-8283	11083	3F2371
77	26	2920-01-096-9247	13445	956-9105
77	27	5340-01-161-0594	74842	8349(LLII)
77	28	6620-01-100-0431	70040	6464421
77	29		11083	6N0676
77	30		70040	8992445
77	31	5305-01-097-9388	11083	4S4465
77	32		11083	1H3244
77	33		11083	3D9718
78	1	5940-01-043-6687	59730	RB-2207
78	2		11083	6S7116
78	3	5940-01-087-0285	98410	B-2195-10X
78	4	6250-01-213-6163	77060	2965683
78	5		24617	1860439
78	6	5999-01-119-4109	77060	5297062
78	7	3120-01-160-7617	77060	1869794
78	8		79550	412171
78	9	5940-01-058-9112	11083	5P4571
78	10	5940-01-303-4978	11083	5P1475
78	11	5940-01-285-5146	79550	412026
78	12	5940-01-101-2456	11083	5P1477
78	13	5975-00-133-8687	96906	MS3367-5-0
78	14	5940-00-204-8990	96906	MS25036-111
79	1	5340-01-071-2047	75272	COV-0709
79	2	5961-01-156-7247	11083	2V9473
79	3		11083	S0163
79	4		11083	1H3244
79	5		11083	4K0670
79	6	5305-01-102-7327	11083	7H1246
79	7	5310-00-637-9575	11083	7F9223
79	8	5325-01-105-1968	11083	8D482
79	9		11083	5P7086
79	10	5305-00-115-9526	96906	MS18154-58
79	11	5310-00-407-9566	96906	MS35338-45
79	12	5340-00-404-4100	75272	COV-2113
79	13		11083	1V9607
80	1		11083	5R4552
80	2	5940-00-143-4793	96906	MS25036-110
80	3		11083	8K8009
80	4	5940-01-121-0365	11083	7K4474
80	5	5935-01-119-1467	11083	5P3175
80	6	5940-01-097-3578	11083	6N9587
80	7	5935-01-097-7247	79550	16274
81	1		11083	5R4520
81	2		73782	671885
81	3		98933	GCH36
81	4	6210-01-101-2795	72619	820-2701-0433-50 2
81	5	6210-01-101-2794	72619	820-2701-0431-50 2

CROSS-REFERENCE INDEXES

FIGURE AND ITEM NUMBER INDEX

FIG.	ITEM	STOCK NUMBER	CAGEC	PART NUMBER
81	6		72619	820-2701-0432-50 2
81	7	6240-00-143-7513	08805	6S6-24V
81	8	5325-00-359-5448	70485	2866
81	9		73782	671894
81	10	5310-01-094-8810	11083	5P1075
81	11	5306-00-261-1150	11083	L472
81	12	5306-00-715-7758	11083	2H3738
81	13	5305-00-071-2506	96906	MS90728-3
81	14		11083	5R4550
81	15	5940-00-351-8077	11083	2L8074
81	16	6145-00-600-6052	81349	M22759/11-16-0
81	17	5940-00-204-8990	96906	MS25036-111
81	18		11083	5R4549
81	19	5940-00-204-8990	96906	MS25036-111
81	20	6145-00-600-6052	81349	M22759/11-16-0
81	21	5940-01-059-0873	11083	2L8071
81	22	5940-00-351-8077	11083	2L8074
81	23	5305-00-068-7837	96906	MS90728-5
81	24	5310-01-098-0634	78189	WD23875
81	25		11083	5R4503
81	26		11083	5R4551
81	27	5935-01-120-3853	79550	19188A
81	28	5940-00-351-8077	11083	2L8074
82	1	5365-01-059-0914	11083	6D2256
82	2	5310-00-757-6194	11083	5D3184
82	3	2530-00-439-9264	11083	5D3183
82	4	5306-00-263-7301	11083	0L1351
82	5	5310-00-407-9566	96906	MS35338-45
82	6	5310-01-266-2481	11083	4B4278
82	7	5340-01-286-6227	11083	2V2999
82	8		11083	2V3000
82	8		11083	2V3001
82	9	5310-00-251-0088	15564	1377A
82	10	5310-00-118-3035	11083	4B4279
82	11	5340-00-426-4803	11083	8M2772
82	12	5325-01-098-6305	11083	5P6629
82	13	5325-01-098-6306	11083	5P8939
82	14	5310-00-117-4788	11083	5M2894
82	15		11083	2V3020
82	16	5935-01-097-7240	79550	11722
82	17	5940-01-303-4978	11083	5P1475
82	18	2590-01-098-9330	11083	7K4475
82	19	5940-00-143-4793	96906	MS25036-110
82	20	5310-01-102-2478	11083	9N1650
82	21	5306-00-423-8194	11083	1A2029
82	22		73331	9D1824
82	23	5365-01-069-1441	11083	1V1494
83	1	6220-00-953-4652	74400	M2875
83	2	6240-00-643-0687	11083	1M5898
83	3		73331	5937085

CROSS-REFERENCE INDEXES

FIGURE AND ITEM NUMBER INDEX

FIG.	ITEM	STOCK NUMBER	CAGEC	PART NUMBER
83	4	6220-00-832-8774	73331	921472
83	5	6220-00-756-8787	73331	5949719
83	6	5305-00-005-0896	11083	5M6668
83	7	5310-00-251-0088	15564	1377A
83	8	5310-01-094-8810	11083	5P1075
83	9	5305-01-015-6841	11083	0S1591
83	10		11083	3F1688
83	11	5310-01-102-9865	11083	3V3308
83	12	5305-00-115-9526	96906	MS18154-58
83	13		11083	5R4490
83	14	5940-00-143-4774	96906	MS25036-153
83	15	5940-00-291-0085	79550	2863
83	16	5340-00-448-1795	75272	COV-0413
83	17		11083	5R4492
83	18	5306-00-423-8194	11083	1A2029
83	19	2530-00-439-9264	11083	5D3183
83	20	5310-00-757-6194	11083	5D3184
83	21	5310-00-507-5727	11083	2B8352
83	22	2510-01-196-1284	11083	1S1888
84	1		11083	7M7147
84	2	6220-00-731-6084	11083	8M1241
84	3	5310-00-045-3299	96906	MS35338-42
84	4	5310-00-660-2649	96906	MS35690-424
84	5	5310-01-062-9899	11083	1H3338
84	6	5310-00-660-2649	96906	MS35690-424
84	7	5305-00-984-6192	96906	MS35206-244
84	8	6240-00-044-6914	11083	7H2976
84	9	6240-00-019-3093	11083	2D1559
84	10	5305-00-005-0896	11083	5M6668
84	11		11083	5M8032
85	1		11083	5V8964
85	2	5940-01-101-2456	11083	5P1477
85	3	5940-01-303-4978	11083	5P1475
85	4	5935-01-097-7239	79550	17510
85	5	5935-01-120-3853	79550	19188A
85	6		96906	MS35489-106
85	7	5340-00-426-4646	11083	4D8123
85	8	5310-00-407-9566	96906	MS35338-45
85	9	5305-00-115-9526	96906	MS18154-58
86	1	6220-00-295-2860	12662	5854-016
86	2	6240-00-519-3399	08108	2232
86	3	6220-01-150-4033	81834	01-6103-85
86	4	5305-00-984-6192	96906	MS35206-244
87	1	6220-01-097-4321	73331	910825
87	2	6220-01-148-7953	73331	5937086
87	3	6220-00-832-8774	73331	921472
87	4	5305-00-005-0896	11083	5M6668
87	5	6220-00-756-8787	73331	5949719
87	6	6240-00-727-8573	11083	1M5928
87	7	6220-01-097-1881	73331	910826
87	8	6220-01-148-7953	73331	5937086

CROSS-REFERENCE INDEXES

FIGURE AND ITEM NUMBER INDEX

FIG.	ITEM	STOCK NUMBER	CAGEC	PART NUMBER
87	9	6220-00-832-8774	73331	921472
87	10	5305-00-005-0896	11083	5M6668
87	11	6220-00-756-8787	73331	5949719
87	12	6240-00-727-8573	11083	1M5928
87	13	6220-01-097-4320	73331	910824
87	14	6220-01-337-5622	73331	5937085
87	15	6220-00-832-8774	73331	921472
87	16	5305-00-005-0896	11083	5M6668
87	17	6220-00-756-8787	73331	5949719
87	18	6240-00-643-0687	11083	1M5898
87	19	6220-00-953-4652	74400	M2875
87	20		73331	5937085
87	21	6220-00-832-8774	73331	921472
87	22	5305-00-005-0896	11083	5M6668
87	23	6220-00-756-8787	73331	5949719
87	24	6240-00-643-0687	11083	1M5898
87	25	5365-01-063-2978	11083	3D7854
87	26	5365-01-059-0914	11083	6D2256
87	27	5310-00-045-5001	96906	MS35340G50
87	28	5310-00-763-8905	96906	MS51968-20
88	1	5306-00-226-4827	96906	MS90728-34
88	2		11083	8P3497
88	3		11083	6K1827
88	4	5940-00-283-5281	96906	MS25036-109
88	5	5930-01-013-3785	91929	BZ-2R55-A2-S
88	6		11083	2V6077
88	7	2590-01-222-5493	11083	2V7616
88	8	5935-01-255-8020	79550	19191
88	9	5940-00-143-4774	96906	MS25036-153
88	10	5930-00-578-3570	91929	MD3211-Q
88	11	5330-01-107-5188	11083	5V965
88	12	5310-00-804-4806	23040	33797S36
88	13	5310-00-407-9566	96906	MS35338-45
88	14		11083	3V2738
88	15	5310-00-407-9566	96906	MS35338-45
88	16	5305-00-115-9526	96906	MS18154-58
89	1		11083	2V7050
89	2	5310-01-094-8810	11083	5P1075
89	3	5306-00-263-7301	11083	0L1351
89	4	5310-00-251-0088	15564	1377A
89	5	6350-01-312-6331	11083	7N1138
89	6	5306-00-260-4508	11083	0S1594
89	7	5305-00-071-2069	96906	MS90728-113
89	8	5310-01-097-6720	11083	5P1076
89	9	5310-00-768-0318	96906	MS51967-14
90	1	5310-00-438-8604	11083	1M6120
90	2		11083	8A2071
90	3	5306-00-438-8600	11083	1M6119
90	4		11083	2V7397
90	5	4730-01-068-6077	11083	6K0806
90	6		11083	3V8325

CROSS-REFERENCE INDEXES

FIGURE AND ITEM NUMBER INDEX

FIG.	ITEM	STOCK NUMBER	CAGEC	PART NUMBER
90	7	5340-01-103-3664	11083	6K8178
90	8	5310-00-251-0088	15564	1377A
90	9	5310-00-117-4788	11083	5M2894
90	10		11083	2V7396
90	11	5310-00-768-0318	96906	MS51967-14
90	12	5310-00-930-7013	11083	4B4280
90	13	6150-01-298-1505	11083	2V9043
90	14	6150-01-207-8050	11083	5R4524
90	15	6150-01-214-5751	11083	5R4525
90	16	2920-01-066-7642	11083	9D2449
90	17	5930-00-775-7691	11083	7N718
90	18	5310-01-059-0992	11083	7F7259
90	19	5310-00-833-9298	11083	6F7045
90	20	5310-00-550-3714	11083	2H3922
90	21	5310-01-063-7852	11083	8H5303
90	22	5930-00-715-1939	13445	8398
90	23	5935-01-097-9974	28275	11674728B
90	24	5305-01-102-9822	11083	4B1247
90	25		11083	5R4468
90	26	5310-01-097-6612	11083	3B4503
90	27	5310-01-097-6607	11083	4B2051
90	28		11083	2V7394
90	29	5305-00-115-9526	96906	MS18154-58
90	30	5340-01-064-3819	11083	9M8406
90	31	5340-01-113-0897	11083	2Y1834
90	32	6140-01-222-5548	11083	5R4299
90	33	5305-00-068-7837	96906	MS90728-5
90	34	6140-01-222-5548	11083	5R4299
90	35		11083	9M3903
90	36	5310-00-038-9417	75418	3058-00843-06
90	37	5310-00-843-4593	11083	1B4430
90	38	6140-00-190-9828	11083	4S9219
90	39		11083	2V5455
90	40	5310-00-999-8285	11083	8M7145
90	41	5306-00-426-2983	11083	T768
90	42	5306-01-108-2510	11083	5V625
90	43	5310-01-105-1863	11083	8M2337
90	44	5310-00-660-1938	72962	21NU040
90	45		11083	4D1936
91	1	2590-01-222-5496	11083	5R4543
91	2	5935-01-097-7239	79550	17510
91	3	5940-01-188-0009	79550	11856
91	4	5935-01-118-8884	79550	19189C
91	5	5935-01-255-8020	79550	19191
91	6	5935-01-256-0170	79550	19189D
91	7	5340-00-426-4656	11083	4D7794
91	8	5305-00-115-9526	96906	MS18154-58
91	9	5310-00-407-9566	96906	MS35338-45
91	10		11083	5R4544
91	11	5935-01-097-7239	79550	17510
91	12	5935-01-118-8884	79550	19189C

CROSS-REFERENCE INDEXES

FIGURE AND ITEM NUMBER INDEX

FIG.	ITEM	STOCK NUMBER	CAGEC	PART NUMBER
91	13	5935-01-130-5359	96906	MS3451W24-10S
91	14		11083	9K0700
91	15	2920-01-058-9099	11083	3S2093
91	16	5310-00-251-0088	15564	1377A
92	1	5930-01-097-4299	11083	7N4351
92	2	5340-00-426-4803	11083	8M2772
92	3		11083	5V3994
92	4	5940-01-303-4978	11083	5P1475
92	5	5935-01-097-7239	11083	6K1828
92	6	5935-01-120-3853	79550	19188A
92	7	5940-01-188-0009	79550	11856
92	8		11083	6P5443
92	9	5330-01-124-2451	99517	A180-119MILP2573 2
92	10	5340-00-426-4656	11083	4D7794
92	11	5340-00-426-4819	11083	1S1015
92	12	5305-00-721-5492	11083	0T0102
92	13	5310-00-251-C088	15564	1377A
92	14	5310-01-063-5822	11083	9F5644
92	15	5930-01-013-3785	91929	BZ-2R55-A2-S
92	16		11083	2V6077
92	17	2590-01-243-3614	11083	7K0447
92	18	5306-00-226-4825	96906	MS90728-32
92	19	2590-01-222-5495	11083	5V4041
92	20	5935-01-255-8020	79550	19191
92	21	5940-00-143-4793	96906	MS25036-110
92	22	5940-01-043-6687	59730	RB-2207
92	23	5935-01-118-8884	79550	19189C
92	24	5940-01-188-0009	79550	11856
92	25	5340-00-426-4793	11083	8M2770
92	26	5340-00-426-4646	11083	4D8123
92	27		11083	4V4042
92	28	5940-00-351-8077	11083	2L8074
92	29	6150-01-299-4514	79550	19192
92	30		79550	413472
92	31	5940-01-303-4978	11083	5P1475
92	32	6620-01-110-4620	11083	7N5380
92	33	5330-00-167-5174	81349	M83248/2-910
92	34	5330-00-855-8054	11083	4D2297
92	35		78553	C40699-017
92	36		11083	2V5116
92	37		11083	5V3832
92	38	5306-00-260-4508	11083	0S1594
92	39	5925-01-157-4604	11083	3R8920
92	40	5310-00-559-0070	11083	9B7233
92	41	5305-01-102-9823	11083	3D9799
92	42	5310-00-432-8001	11083	4B4863
92	43		11083	2V7993
92	44		11083	2V2380
92	45	5945-00-843-1778	16764	001481
92	46	5310-00-853-9335	96906	MS35691-13

CROSS-REFERENCE INDEXES

FIGURE AND ITEM NUMBER INDEX

FIG.	ITEM	STOCK NUMBER	CAGEC	PART NUMBER
92	47	5310-00-264-0128	11083	4M62
92	48	5310-00-235-2428	11083	8F0908
92	49	5310-00-010-3092	24617	103092
92	50	5310-00-045-3299	96906	MS35338-42
92	51	5925-00-890-5035	11083	9M9085
92	52	5310-00-010-3092	24617	103092
92	53	5310-00-576-5752	11083	8F1434
92	54	5945-01-182-2460	11083	7N5933
92	55	5340-00-404-4100	75272	COV-2113
92	56		11083	3V6176
92	57	5961-01-156-7247	11083	2V9473
92	58	5945-01-243-8215	11083	8N2390
92	59	5945-01-184-4079	20308	PH-23
92	60		11083	3S8536
92	61	5310-01-061-8633	11083	9L9132
92	62	5306-00-260-4508	11083	0S1594
92	63	5305-00-068-7837	96906	MS90728-5
92	64		11083	1H3244
92	65	5310-00-042-6376	24617	426376
92	66	2920-01-066-5207	11083	9D8661
92	67	5310-00-167-0721	11083	3F9556
92	68	5305-01-102-7341	11083	2S9556
92	69		11083	4B2049
92	70	5310-01-266-2481	11083	4B4278
92	71		70611	3000M362B-3
92	72	5305-01-103-8797	11083	9G2399
92	73	5310-01-097-8230	11083	3F3711
92	74	5310-00-877-5797	96906	MS21044N3
93	1	2590-01-222-5494	11083	5R4569
93	2	5940-00-114-1306	96906	MS25036-117
93	3		11083	2L8051
93	4	5940-00-143-4780	96906	MS25036-108
93	5	5940-00-114-1311	96906	MS25036-124
93	6	5940-00-113-8183	96906	MS25036-113
93	7	5940-00-143-4774	96906	MS25036-153
93	8	5940-00-143-4775	96906	MS25036-156
93	9	5940-01-303-4978	11083	5P1475
93	10	5940-00-557-4344	96906	MS25036-120
93	11	5940-01-101-2456	11083	5P1477
93	12	5940-01-188-0009	79550	11856
93	13	5940-01-053-4521	11083	2L8077
93	14	5935-01-256-0170	79550	19189D
93	15	5940-00-283-5281	96906	MS25036-109
93	16	5935-01-119-1467	79550	19188B
93	17	5940-00-230-0515	96906	MS25036-154
93	18	5935-01-118-8885	79550	19193
93	19	5935-01-118-8884	11083	5P3160
93	20	5940-01-121-0365	79550	11851
93	21	5935-01-255-8020	79550	19191
93	22	5935-01-097-7247	79550	16274
93	23		11083	5V6834

CROSS-REFERENCE INDEXES

FIGURE AND ITEM NUMBER INDEX

FIG.	ITEM	STOCK NUMBER	CAGEC	PART NUMBER
93	24	6150-01-299-4514	11083	6K6383
93	25	5940-00-143-4774	96906	MS25036-153
94	1	5310-00-209-5116	96906	MS35335-37
94	2	2590-01-184-4151	11083	5R4690
94	3	5310-00-627-6128	45152	EE45626
94	4	5310-00-251-0088	15564	1377A
94	5	5310-01-062-9899	11083	1H3338
94	6	2590-01-184-4150	11083	5R4691
94	7	5910-01-176-8877	11083	5R4610
94	8	5305-01-256-8504	53711	5979393-1
94	9	5310-01-098-0634	78189	WD23875
94	10	5310-00-042-6376	24617	426376
94	11		11083	5R4688
94	12	2590-01-160-3599	11083	5R4686
94	13	5306-00-497-7419	80020	87750-25
94	14		11083	5R4689
94	15	5306-00-261-1153	11083	S1615
94	16	5310-01-051-2360	11083	5P0537
94	17		11083	3M2452
94	18	5310-00-514-6674	96906	MS35335-34
94	19		11083	5R4687
95	1		11083	2V2258
95	2		11083	2V2541
95	3		11083	3V0729
95	4	5330-00-999-5503	11083	8M4443
95	5	5330-00-999-5505	11083	8M8157
95	6		11083	8P1471
95	7	5306-00-426-2974	11083	T65
95	8	5330-01-060-0308	11083	1P3705
95	9		11083	1P5762
95	10	5306-00-273-6357	11083	1A1460
95	11	5310-01-098-0624	11083	5P8245
95	12	5330-00-613-6519	11083	4J0522
95	13		11083	1P44578
95	14	5305-00-071-2055	96906	MS90728-89
95	15	5310-01-097-8955	11083	5P8244
95	16		11083	2V5040
95	17	5330-01-026-9557	11083	4J0524
95	18	5340-01-060-0309	11083	1P4579
95	19	5306-00-263-8978	11083	S1587
95	20	5340-01-113-3419	11083	2V2792
95	21	5306-00-263-7301	11083	0L1351
95	22	5310-00-117-4788	11083	5M2894
95	23	5330-01-069-0760	11083	4J0527
95	24	5306-00-424-0086	11083	7B3235
95	25	5310-00-584-5272	96906	MS35338-48
96	1	5330-00-930-5736	11083	8M4986
96	2	5305-00-708-3823	11083	7B3028
96	3		11083	7G8964
96	4		11083	8P1455
96	5	5365-00-411-4584	11083	9S4191

CROSS-REFERENCE INDEXES

FIGURE AND ITEM NUMBER INDEX

FIG.	ITEM	STOCK NUMBER	CAGEC	PART NUMBER
96	6	5330-00-801-3354	25184	906-737-70
96	7		11083	2P4538
96	8		80756	RR75
96	9		11083	8M2537
96	10	5360-00-932-0761	11083	5M9548
96	11		11083	9M4313
96	12		11083	2P4539
96	13	2520-00-949-1439	11083	5M9624
96	14	5310-00-948-3280	11083	5M9623
96	15	5365-00-762-6106	11083	5M9622
96	16	5360-00-950-2471	11083	8M8627
96	17		11083	4M8239
96	18	5310-00-407-9566	96906	MS35338-45
96	19	5306-00-260-4508	11083	0S1594
97	1		11083	5R4358
97	2		11083	2P5806
97	3	2520-00-455-9263	11083	8S5820
97	4	5330-01-097-6628	11083	4D8621
97	5		11083	5D6535
97	6	5310-00-407-9566	96906	MS35338-45
97	7	5306-00-423-8194	11083	1A2029
97	8		11083	1P7521
97	9		11083	4S5838
97	10	5306-00-426-2870	11083	L1558
97	11	3110-00-554-2974	12603	214596
97	12	5330-00-929-5507	11083	4S5898
97	13	5330-01-112-7956	11083	5P713
97	14		11083	8P2934
97	15	5330-01-026-2850	11083	8M8282
97	16		11083	5S0928
97	17	5330-00-948-6632	11083	1M3937
97	18	4320-00-932-0782	11083	5S927
97	19		11083	7G2608
97	20	5306-00-424-0086	11083	7B3235
97	21	5310-00-584-5272	96906	MS35338-48
97	22	5305-00-071-2069	96906	MS90728-113
97	23	5330-00-881-1402	11083	4H6730
97	24	5306-00-263-7301	11083	0L1351
97	25	5340-01-104-8659	11083	6P8339
97	26	5330-01-107-5182	11083	8M4433
97	27		11083	6P8340
97	28	5330-01-102-5599	11083	8L3017
98	1		61208	217506
98	2	5305-00-071-2069	96906	MS90728-113
98	3	5310-00-431-7239	11083	2M849
98	4		11083	2P5861
98	5	3120-00-973-8651	75174	LSB25
98	6		11083	2P4394
98	7		11083	1T0806
98	8		61208	M-2086-AC
98	9		11083	1T0786

CROSS-REFERENCE INDEXES

FIGURE AND ITEM NUMBER INDEX

FIG.	ITEM	STOCK NUMBER	CAGEC	PART NUMBER
98	10	5306-00-423-8117	11083	0S1595
98	11		11083	2P4470
98	12		11083	2P0768
98	13		61208	211444-A
98	14		61208	A-2669-DS
98	15		61208	204151-B
98	16		11083	3P7230
98	17		11083	2P4389
98	18	3120-00-973-8651	11083	1T0766
98	19		11083	7G2318
98	20	5306-00-226-4826	96906	MS90728-33
98	21	5310-00-432-4064	11083	9M1974
98	22		11083	2P9336
98	23		11083	2P9187
98	24		11083	2P5698
98	25		11083	8P6836
98	26		11083	2P9334
98	27	5315-01-066-9168	11083	2K9062
98	28		11083	9G1904
98	29		11083	8P6839
98	30	5315-01-098-6458	11083	1M3151
98	31		11083	8P6838
98	32		11083	2P5697
98	33		11083	6P0384
98	34	5306-00-455-0467	11083	1T414
98	35		11083	2P4448
98	36		11083	6P6241
98	37		11083	8P8952
98	38	5340-00-737-3635	19207	7373635
98	39	5315-00-893-7264	11083	2H2255
98	40		11083	5P9506
98	41		11083	3P3673
98	42	5305-00-253-5615	96906	MS21318-21
98	43		11083	3P8963
98	44	5306-01-110-1886	11083	310228
98	45	5310-00-629-9613	19207	6299613
98	46	5306-00-423-8194	11083	1A2029
98	47	5310-00-117-4788	11083	5M2894
98	48	2520-01-059-7193	11083	3S1284
98	49	2520-01-059-0901	11083	3S1282
98	50		11083	2P9193
99	1	2520-01-105-0078	11083	3P9094
100	1	5310-00-251-0088	15564	1377A
100	2	5310-00-407-9566	96906	MS35338-45
100	3		11083	3S1372
100	4	5330-01-119-7210	11083	3S1373
100	5		11083	3P3596
100	6	2520-00-113-5509	55355	1577AL
100	7	5306-00-260-4508	11083	0S1594
100	8	5330-01-097-6632	11083	3P3461
100	9		11083	7G7135

CROSS-REFERENCE INDEXES

FIGURE AND ITEM NUMBER INDEX

FIG.	ITEM	STOCK NUMBER	CAGEC	PART NUMBER
100	10		11083	7G7134
100	11	5315-00-252-2961	11083	1A2225
100	12	5330-01-097-6621	11083	5P2587
100	13	5365-00-478-2920	11083	9S4183
100	14	5330-01-124-2451	99517	A180-119MILP2573 2
100	15		11083	3P9922
100	16	5330-00-801-3354	25184	906-737-70
100	17	5365-00-411-4584	11083	9S4191
100	18		11083	2M3403
100	19	5330-00-930-5736	11083	8M4986
100	20	5306-00-263-8978	11083	S1587
100	21	5310-00-584-5272	96906	MS35338-48
101	1		11083	6P5139
101	2	5330-00-913-8878	11083	8M4432
101	3	5365-01-099-8160	11083	6P4977
101	4	5306-00-281-5130	11083	6B1557
101	5	5310-00-117-4788	11083	5M2894
101	6	5330-00-367-5650	11083	3P647
101	7		11083	6P4979
101	8	5360-00-249-3500	11083	4B8710
101	9	5330-01-124-2451	99517	A180-119MILP2573 2
101	10	4730-01-097-4727	11083	6P4975
101	11	5310-00-573-5639	18876	8519718
101	12	5306-01-102-7332	11083	8L5922
101	13	5330-00-952-8008	11083	3J7354
102	1		11083	5L1761
102	2	5310-00-432-4064	11083	9M1974
102	3		11083	6P5141
102	4	5330-01-097-9428	11083	6P4973
102	5	5330-00-710-9591	11083	5H8853
102	6		11083	6P4969
102	7	5360-01-156-8042	11083	8P1556
102	8		11083	6P4501
102	9	5306-00-409-3684	11083	1K6978
102	10		11083	6P4499
102	11		11083	6P4498
102	12	4730-00-924-7886	11083	5M6214
103	1		11083	7G9570
103	2	5315-01-098-3928	11083	1J5353
103	3	5315-01-098-3929	11083	8P6321
103	4	2520-01-059-9414	11083	2S696
103	5		11083	7G9565
103	6	5340-01-098-3997	11083	7G9562
103	7		11083	7G9564
103	8	5330-01-066-0673	11083	1P8116
103	9	2590-01-066-1455	11083	7S4607
103	10	5305-01-097-9881	11083	2H2995
103	11	5330-00-865-0404	11083	6F6673
103	12	5340-01-155-4484	11083	6P4938

CROSS-REFERENCE INDEXES

FIGURE AND ITEM NUMBER INDEX

FIG.	ITEM	STOCK NUMBER	CAGEC	PART NUMBER
103	13	5306-00-226-4826	96906	MS90728-33
103	14	5330-00-710-9591	11083	5H8853
103	15		11083	9P5476
103	16		11083	6P4935
103	17	5365-01-160-4614	11083	6P4940
103	18	4730-01-068-7106	11083	2M7041
103	19	4820-01-097-0515	11083	7G4291
103	20	5365-00-687-3379	96906	MS16625-1062
103	21	5340-01-069-0788	11083	8M1013
103	22	5360-00-950-8041	11083	4M2381
103	23	3110-00-949-1438	11083	4B9880
103	24		11083	7G4030
103	25	5360-01-098-1870	11083	7G4842
103	26	5360-01-098-0283	11083	9P3041
103	27	5365-00-762-6106	11083	5M9622
103	28	5310-00-948-3280	11083	5M9623
103	29	2520-00-949-1439	11083	5M9624
103	30		11083	6P4939
103	31	2520-01-102-1583	11083	6P4943
103	32	2520-01-059-9409	11083	5S7816
103	33	5360-01-098-1867	11083	6P4978
103	34	2520-01-059-9356	11083	2S4872
103	35	2520-01-098-3947	11083	7G9563
103	36	5360-01-098-1871	11083	6P9784
103	37	5360-01-097-9194	11083	6P9783
103	38	1650-01-153-1633	11083	6P9786
103	39	5360-01-098-0284	11083	6P9785
103	40	5365-01-155-5308	72800	NAN68
103	41	4810-01-103-9066	11083	7G2546
103	42	5340-00-737-3635	19207	7373635
103	43	4820-01-152-5578	11083	6P4971
104	1	3020-01-098-7412	11083	3P3418
104	2		11083	3P3737
104	3	5315-00-193-0904	11083	7M8479
104	4		11083	2J8466
104	5		11083	3P3097
104	6	5305-01-107-5161	11083	L2315
104	7		11083	7G2928
104	8		11083	3P4051
104	9		11083	3P2983
104	10		11083	9F3788
104	11		11083	3P3708
104	12		11083	7G0897
104	13	3110-00-971-4765	11083	5M7925
104	14		11083	7G3457
104	15		11083	3P3321
104	16		11083	3P2684
104	17		11083	3P3245
104	18		11083	3P3739
104	19	2520-01-069-0806	11083	4S8537
104	20		11083	3P2683

CROSS-REFERENCE INDEXES

FIGURE AND ITEM NUMBER INDEX

FIG.	ITEM	STOCK NUMBER	CAGEC	PART NUMBER
104	21		11083	8P4617
104	22	2520-01-097-6326	11083	9G5287
104	23		11083	3P7447
104	24		11083	3P2810
104	25	3120-01-107-7339	11083	7G899
104	26	3020-01-097-4784	11083	7G3458
104	27	3110-01-097-9505	11083	1P3958
104	28	5315-01-059-7198	11083	3S2708
104	29	3040-01-102-5746	11083	3P3246
104	30	5365-01-160-2426	72800	7948
104	31	5365-00-200-7367	96906	MS16624-1450
104	32	3110-00-248-5973	11083	4S8546
104	33		11083	6P7392
104	34	5340-00-422-2573	11083	9S1343
104	35		11083	3P2760
104	36	5365-00-374-1400	11083	6F0156
104	37	5330-01-102-3255	11083	3P2795
104	38	5330-01-102-3256	11083	3P2793
104	39		11083	3P9367
105	1		11083	3P3096
105	2		11083	3P2759
105	3		11083	3P3707
105	4	5365-00-200-7367	96906	MS16624-1450
105	5	3110-00-248-5973	11083	4S8546
105	6		11083	6P5554
105	7		11083	6P3153
105	8	2520-01-069-0806	11083	4S8537
105	9	5365-01-025-4970	96906	MS16624-1362
105	10	3120-01-095-5804	11083	7G0894
105	11	3020-01-254-0088	11083	7G2476
105	12	3110-00-239-7702	11083	5M6126
105	13	5315-01-059-7198	11083	3S2708
105	14		11083	3S8038
105	15		11083	3P3098
105	16	2520-01-097-6326	11083	9G5287
105	17		11083	3P7447
105	18		11083	3P2685
105	19	5330-01-102-3256	11083	3P2793
105	20		11083	3P2794
105	21	5315-01-067-1727	11083	9H5546
105	22	5365-01-032-7272	11083	9M4355
105	23		11083	3P3738
105	24		11083	3P2413
105	25	5315-00-193-0925	11083	7M8480
105	26	5360-01-097-9195	11083	2P5755
105	27	2520-01-097-6326	11083	9G5287
105	28		11083	3P3180
105	29		11083	3P9366
105	30	5305-00-964-0503	96906	MS90728-78
105	31		11083	3P2414
105	32	5315-01-103-0060	11083	9M1990

CROSS-REFERENCE INDEXES

FIGURE AND ITEM NUMBER INDEX

FIG.	ITEM	STOCK NUMBER	CAGEC	PART NUMBER
105	33		11083	5P0546
105	34	5365-01-095-8663	80756	RRT393
105	35		11083	3P3059
105	36		11083	8P1419
105	37	5365-00-663-2215	96906	MS16624-1255
105	38	5330-00-948-8440	11083	5M6187
105	39		11083	3P4054
105	40	5330-01-135-7503	11083	9M1503
105	41		11083	6P1543
105	42	5315-00-760-7424	11083	9M2001
105	43		11083	3P3821
106	1		11083	3P2761
106	2	5310-00-117-4788	11083	5M2894
106	3	5305-01-102-7342	11083	6J6721
106	4	3110-00-248-5973	11083	4S8546
106	5	5365-01-160-2426	72800	7948
106	6		11083	3P3060
106	7	5365-00-205-5118	96906	MS16624-1425
106	8		11083	1P0014
106	9		11083	6P5725
106	10		11083	3P3180
106	11		11083	3P2415
106	12		11083	3P4050
106	13	5365-00-252-4689	79136	5100-287MD
106	14		11083	3P3242
106	15	5315-01-059-7198	11083	3S2708
106	16	3120-01-186-1302	11083	6T7799
106	17	3110-00-945-8401	11083	5M2054
106	18		11083	7G2486
106	19	5340-01-102-7660	11083	6P5724
106	20	5306-01-102-7321	11083	3H6591
106	21	5315-00-431-8915	11083	1S9989
106	22	5330-01-097-6620	11083	2D8363
106	23		11083	7G7139
106	24	5315-00-193-0925	11083	7M8480
106	25	4730-01-148-3865	11083	4K8603
106	26		11083	7G7138
106	27	5315-01-151-1102	11083	3F3442
106	28	5365-00-411-4584	11083	9S4191
106	29	5330-00-801-3354	25184	906-737-70
106	30	2520-01-097-6326	11083	9G5287
106	31		11083	3P7447
106	32		11083	3P2685
106	33	5330-01-102-3256	11083	3P2793
106	34		11083	3P2794
106	35	5360-00-894-7275	11083	9H5537
106	36	5330-00-931-2219	11083	7F2122
106	37	5305-00-465-5947	11083	5J5794
106	38		11083	3P5431
106	39		11083	3P7489
106	40		11083	6P7379

CROSS-REFERENCE INDEXES

FIGURE AND ITEM NUMBER INDEX

FIG.	ITEM	STOCK NUMBER	CAGEC	PART NUMBER
106	41	5315-00-245-9995	11083	8B1312
106	42		11083	6P5752
106	43		11083	3P2768
106	44	5330-01-108-3780	11083	3P2792
106	45	2520-01-067-5621	11083	1P9261
106	46		80756	RST400
106	47		11083	3P3304
106	48		11083	3P3635
106	49		11083	3P3735
106	50	5310-00-431-7239	11083	2M849
106	51	5305-01-103-5728	11083	8S6212
106	52		11083	3P3673
106	53		11083	2M3403
106	54		11083	6P5751
106	55	2520-01-097-6326	11083	9G5287
106	56	5315-00-193-0925	11083	7M8480
106	57		11083	3P2791
107	1		11083	3P3473
107	2		11083	1P7522
107	3	5330-00-931-4533	11083	4K7463
107	4		11083	3P3349
107	5	5365-01-097-9217	11083	3P3495
107	6	5330-00-855-8044	11083	2K8257
107	7	3110-00-100-0305	11083	6B3224
107	8	3110-00-100-0233	11083	4B7255
107	9	3020-01-097-9607	11083	3P6037
107	10	3110-00-727-6901	11083	3N6412
107	11	3110-00-678-1862	11083	3N6411
107	12	5305-00-071-2069	96906	MS90728-113
107	13	5310-00-584-5272	96906	MS35338-48
107	14		11083	3P2408
107	15	2520-01-064-6625	11083	9S7949
107	16	3010-01-064-7524	11083	9S7950
107	17	3020-01-098-6868	11083	3P6038
107	18	5365-01-105-2285	11083	3P9658
107	19	3110-01-102-1995	11083	3P9600
107	20	5306-00-260-4508	11083	0S1594
107	21		11083	3P3475
107	22		11083	3P3499
107	23		11083	3P3501
107	24		11083	3P3567
107	25	5305-00-724-7221	96906	MS90728-163
107	26	5310-00-045-5001	96906	MS35340&50
107	27		11083	3P3515
107	28		11083	3P3566
107	29		11083	3P3498
107	30	5310-00-407-9566	96906	MS35338-45
107	31	5306-00-698-2150	11083	L2070
107	32	5340-01-172-5535	11083	2N0822
107	33	5330-01-021-9052	11083	3P6061
108	1	5306-00-423-8194	11083	1A2029

CROSS-REFERENCE INDEXES

FIGURE AND ITEM NUMBER INDEX

FIG.	ITEM	STOCK NUMBER	CAGEC	PART NUMBER
108	2	5340-01-098-6669	11083	1A7458
108	3	3110-01-097-9632	11083	3P3429
108	4	5365-01-097-6833	11083	3P2922
108	5	5306-00-809-7134	11083	2B947
108	6	5310-00-584-5272	96906	MS35338-48
108	7	5330-01-119-8947	11083	3P2893
108	8	3110-00-101-1796	11083	4F2041
108	9	3110-00-948-9790	11083	2D9457
108	10	3020-01-097-8473	11083	3P3355
108	11	5310-01-095-4631	11083	5P8247
108	12	5306-00-423-8292	11083	1A8651
108	13	5330-01-097-6621	11083	5P2587
108	14	5306-00-426-3209	11083	1B4367
108	15	5330-00-506-1475	11083	2K4472
108	16	5310-00-407-9566	96906	MS35338-45
108	17	3010-01-105-5743	11083	8P514
108	18	5330-00-946-2871	11083	2D8540
108	19	2520-01-102-3718	11083	1P4082
108	20		11083	3P8186
108	21	5306-00-426-3397	11083	1D4566
108	22	5310-00-584-5272	96906	MS35338-48
108	23	5365-00-182-3868	11083	5F0149
108	24		11083	6P4903
108	25	5305-00-708-3823	11083	7B3028
108	26	5310-01-059-9502	11083	7S2962
108	27		11083	6P4904
108	28	5310-00-407-9566	96906	MS35338-45
108	29	5306-00-260-4508	11083	0S1594
108	30	2940-01-028-8459	11083	4S8598
108	31	2910-01-053-8157	11083	4S8603
108	32	2530-00-949-0666	11083	8M7160
108	33		11083	4S8602
108	34	5330-00-999-5501	11083	2H2665
108	35	5365-00-423-9251	11083	4B2363
108	36	5330-00-297-6548	11083	6F4868
108	37	3020-01-097-8472	11083	3P3357
108	38		11083	1P4078
108	39	5306-00-263-4038	11083	2A4639
108	40	5310-00-117-4788	11083	5M2894
108	41		11083	6P4947
108	42	3110-01-065-7169	11083	1P7834
108	43	3110-01-066-5287	11083	1P7835
108	44	5330-01-097-6622	11083	5J1086
108	45	3110-01-099-0108	11083	1P4079
108	46	5306-00-424-0086	11083	7B3235
108	47	5306-00-268-5798	11083	L1329
108	48	3010-01-096-9250	11083	6P2923
108	49	5340-01-102-3540	11083	3S9880
108	50		11083	3P3504
108	51	5330-00-931-2219	11083	7F2122
108	52		11083	7K1695

CROSS-REFERENCE INDEXES

FIGURE AND ITEM NUMBER INDEX

FIG.	ITEM	STOCK NUMBER	CAGEC	PART NUMBER
108	53	5306-00-423-8119	11083	S1607
108	54		11083	3P3566
108	55		11083	3P3567
108	56		11083	3P3513
108	57		11083	3P3514
108	58	5306-00-423-8069	11083	0L1178
108	59	5310-00-584-7888	96906	MS35338-51
108	60		11083	3P3515
108	61		11083	3P3506
108	62	5315-00-252-2961	11083	1A2223
108	63		11083	3P3507
108	64		11083	3P3511
108	65	5306-00-698-2150	11083	L2070
108	66	3110-01-099-0021	11083	2H6490
108	67	3110-01-099-0023	11083	2H6489
108	68	3040-01-097-9577	11083	3P3560
108	69	3110-00-618-0249	11083	6D7690
108	70	3110-01-161-4027	60038	HM218248-4-468
108	71	3020-01-098-3976	11083	3P3356
108	72	5330-01-102-5600	11083	7L2181
108	73	5365-01-097-9218	11083	3P3503
108	74		11083	9P1269
108	75	5310-00-768-0318	96906	MS51967-14
108	76	5330-00-234-4870	11083	3F5792
108	77		11083	3P3556
108	78	5307-00-411-4502	11083	3D490
108	79	3130-01-304-2479	11083	3P3428
108	80		11083	7G7140
109	1		11083	7G7137
109	2		11083	7G7136
109	3	5315-00-193-1069	11083	8M8659
109	4		11083	3P2411
109	5		11083	8P8837
109	6	5310-00-143-6382	11083	2S6160
109	7	5306-00-260-4508	11083	0S1594
109	8	5315-00-252-2959	11083	2A3798
110	1	5305-01-097-8927	11083	3K1644
110	2	5355-01-028-1354	11083	6K5177
110	3		11083	1V6346
110	4	5305-00-726-3087	96906	MS51965-40
110	5	5305-01-104-1051	11083	102571
110	6	5305-01-122-5468	11083	102570
110	7	5365-00-256-2846	96906	MS16632-1050
110	8		11083	1V6348
110	9	3020-01-151-3963	11083	1V6342
110	10	3120-01-159-1169	11083	1V5326
110	11		11083	1V5324
110	12	5365-01-157-6895	11083	9K6605
110	13		11083	1V6347
110	14	5340-01-097-9615	11083	1V9809
110	15	5365-00-935-5995	80756	RR112CD

CROSS-REFERENCE INDEXES

FIGURE AND ITEM NUMBER INDEX

FIG.	ITEM	STOCK NUMBER	CAGEC	PART NUMBER
110	16		11083	2V3713
110	17	5310-01-094-8810	11083	5P1075
110	18	5306-00-260-4508	11083	0S1594
110	19	5310-00-297-8836	24617	120613
110	20		83355	1-4INNVYLKWASH
110	21		11083	4V3059
110	22		11083	4V3058
110	23	3040-00-119-0612	11083	9L2685
110	24		03039	56-3331-2096
110	25		11083	4V0031
110	26	5310-01-051-2360	11083	5P0537
110	27	5306-00-497-7419	80020	87750-25
110	28	5306-00-261-1153	11083	S1615
110	29	5340-01-071-2047	75272	COV-0709
110	30	5310-01-062-9899	11083	1H3338
110	31	5310-00-042-6376	24617	426376
110	32	2920-00-423-8362	11083	1B7904
110	33	5330-01-102-7375	11083	2V3215
110	34	5340-01-107-4475	11083	2V3222
110	35	5305-00-115-9526	96906	MS18154-58
110	36	5310-00-407-9566	96906	MS35338-45
110	37	5340-00-426-4656	11083	4D7794
110	38	5310-00-139-7030	11083	4D3704
110	39	5330-01-039-3874	83259	7500-5/8
110	40	5365-01-053-0180	11083	9S4190
110	41		11083	2V6078
110	42	5330-00-527-7748	11083	4F7952
110	43	5315-01-065-9087	11083	8D5295
110	44	5365-00-721-7680	96906	MS16633-1025
110	45	5340-00-363-9858	11083	8B3768
110	46	5306-00-263-7301	11083	0L1351
110	47		11083	4V0074
110	48		11083	2V6076
110	49		03039	56-3331-2111
110	50	5306-00-423-8194	11083	1A2029
110	51	5306-01-097-7874	11083	1T0765
110	52	5330-00-580-1226	11083	1H9696
110	53		11083	2V9009
110	54		11083	1V6343
110	55		11083	4V0212
110	56	5330-00-104-6561	11083	2M2489
110	57	3120-01-159-1169	11083	1V5326
111	1	5365-00-472-5300	11083	9S6130
111	2	5330-00-429-3542	11083	2S4078
111	3	5365-00-330-5530	79136	N5000-77
111	4		11083	2V7364
111	5		11083	2V7247
111	6		11083	2V7225
111	7		11083	3V8513
111	8		11083	2V7246
111	9	3040-01-242-4728	11083	2V7469

CROSS-REFERENCE INDEXES

FIGURE AND ITEM NUMBER INDEX

FIG.	ITEM	STOCK NUMBER	CAGEC	PART NUMBER
111	10		11083	2V7249
111	11		11083	2V7248
111	12		11083	2V7254
111	13	2590-00-930-9407	11083	7M8485
111	14		11083	2V7367
111	15		11083	2V7366
111	16	5330-00-801-3354	25184	906-737-70
111	17	4730-00-491-9576	96906	MS51525A6
111	18		11083	5P4482
111	19	4730-00-834-5035	11083	3J7352
111	20	5330-00-952-8008	11083	3J7354
111	21		31408	ASP-18V
111	22		11083	2V7253
111	23	5365-01-249-7697	11083	2V7252
111	24		11083	5V1698
111	25		11083	2V7237
111	26	5330-00-859-0397	11083	8F3469
111	27		11083	4V2677
111	28		11083	4V2678
111	29	2530-01-065-9086	11083	8D5294
111	30	5330-01-104-1091	09257	S32573-123
111	31	5330-00-494-2763	11083	6J2419
111	32		30780	5HP5N
111	33	5330-00-165-1980	81349	M83248/2-905
111	34	5330-00-470-5727	11083	2S4663
111	35	5330-01-104-1091	09257	S32573-123
111	36		11083	8J4645
112	1	2520-01-047-6754	11083	7W0205
112	2	4730-00-924-7886	11083	5M6214
112	3		11083	7S5428
112	4		11083	7N2110
112	5	5310-00-362-7988	11083	6F7062
112	6	5365-00-938-5568	11083	8M9307
112	7	5330-00-936-2162	11083	2S795
112	8	5306-00-268-5798	11083	L1329
112	9	5306-00-423-8117	11083	0S1595
112	10	5305-00-071-2076	96906	MS90728-120
113	1		11083	3P0381
113	2	4320-01-104-5113	11083	3P380
113	3		11083	3P0377
113	4		11083	2P0268
113	5	5315-00-760-7425	11083	8M8489
113	6	5306-00-423-8194	11083	1A2029
113	7	5310-00-407-9566	96906	MS35338-45
113	8		11083	2P1014
113	9	3120-00-948-9964	11083	5M3320
113	10	5330-00-929-5514	11083	5S6622
113	11	5330-00-939-0871	11083	8M5252
113	12		11083	6P1272
113	13	5315-00-828-9781	11083	1H974
113	14		11083	2P9277

CROSS-REFERENCE INDEXES

FIGURE AND ITEM NUMBER INDEX

FIG.	ITEM	STOCK NUMBER	CAGEC	PART NUMBER
113	15	5330-00-931-4522	11083	2S4080
113	16	5310-01-108-7537	11083	7S9203
113	17	5306-00-253-7627	11083	4K5175
113	18	5306-01-051-0004	11083	5J5793
113	19	5330-00-982-9312	11083	2D8009
113	20		11083	4M0503
113	21		11083	6P4354
113	22		11083	5M1995
113	23	5310-00-413-5144	11083	3S4
113	24	5306-00-470-5543	11083	8S9191
113	25	5306-00-637-4927	11083	1A5183
113	26	5306-00-426-2932	11083	0S1619
114	1		11083	5V1884
114	2	5306-00-423-8194	11083	1A2029
114	3		11083	5V3837
114	4	5306-01-094-9106	11083	0S1590
114	5	5310-00-117-4788	11083	5M2894
114	6		11083	8S9575
114	7	5310-01-266-2481	11083	4B4278
114	8	5310-00-251-0088	15564	1377A
114	9	5306-00-637-4956	11083	0S1588
114	10		11083	7D1533
114	11		11083	5V1303
114	12	5310-00-999-8288	11083	9M6527
114	13	5305-01-015-6841	11083	0S1591
114	14		11083	1V9123
114	15	5310-01-098-0625	11083	6N8863
114	16	5306-00-260-4508	11083	0S1594
114	17	5306-00-263-7301	11083	0L1351
115	1		11083	6P4603
115	2	5330-01-124-2451	99517	A180-119MILP2573 2
115	3	5330-01-059-7141	11083	1P9600
115	4	5360-01-095-1834	11083	9M1986
115	5	5365-00-411-4584	11083	9S4191
115	6	5330-00-801-3354	25184	906-737-70
115	7	2940-01-150-3865	11083	3P0887
115	8	2910-00-740-3593	11083	9M9740
115	9	5330-00-498-2907	11083	7S6745
115	10	5360-00-455-7191	11083	3S8652
115	11	5365-00-803-7303	79136	5100-75MD
115	12		11083	6P4227
115	13	5330-01-021-9880	11083	2S8439
116	1	5305-00-115-9526	96906	MS18154-58
116	2	5340-01-067-8042	11083	4B0418
116	3	5310-00-117-4788	11083	5M2894
116	4	5310-00-251-0088	15564	1377A
116	5	5310-01-102-9865	11083	3V3308
116	6		11083	4V5382
116	7		11083	1V7287
116	8	5306-00-424-0086	11083	7B3235

CROSS-REFERENCE INDEXES

FIGURE AND ITEM NUMBER INDEX

FIG.	ITEM	STOCK NUMBER	CAGEC	PART NUMBER
116	9	5306-00-637-4956	11083	0S1588
116	10		11083	2V9054
116	11	5310-00-629-9613	19207	6299613
116	12		96906	MS5196714
116	12	5310-00-768-0318	96906	MS51967-14
116	13		11083	6K3317
116	14	2815-01-049-8552	11083	7S1801
116	15	2590-00-490-5442	11083	7S1803
116	16		11083	4V6797
116	17	5330-00-760-7344	11083	2J1799
116	18		11083	2V2167
116	19	5340-00-423-8320	11083	1B3057
116	20	5330-00-122-4090	11083	4K5537
116	21	5305-01-015-6841	11083	0S1591
116	22		11083	2V9053
116	23	5306-00-260-4508	11083	0S1594
116	24		11083	2V2169
117	1	4730-01-051-5257	11083	1P4578
117	2	5330-00-613-6519	11083	4J0522
117	3	5305-00-071-2055	96906	MS90728-89
117	4	5310-01-097-8955	11083	5P8244
117	5		11083	2V2934
117	6	3120-00-236-1319	11083	3S7252
117	7	4730-01-062-7184	11083	7S0570
117	8		11083	7S0575
117	9	4730-01-051-5257	11083	1P4578
117	10	4720-01-163-7180	11083	2V5043
117	11	5330-00-997-7230	96906	MS9068-214
117	12	5330-00-985-2219	11083	8M4447
117	13	4730-00-143-3941	96906	MS51527A6
117	14	5310-00-251-0088	15564	1377A
117	15	5340-01-098-4008	11083	2V2793
117	16	5306-00-263-7301	11083	0L1351
117	17	5305-00-071-2069	96906	MS90728-113
117	18		11083	5R4349
117	19		11083	2V2965
117	20	5330-00-801-3354	25184	906-737-70
117	21		11083	3V0730
117	22	4730-01-094-7469	11083	8S6417
117	23	4730-01-095-0075	11083	4S5414
117	24	4730-00-491-9576	96906	MS51525A6
117	25	5330-01-097-6623	11083	1P3709
117	26	5306-00-272-4229	11083	1D4569
117	27	5310-01-098-0624	11083	5P8245
117	28		11083	2V2990
117	29	5330-01-088-6871	81349	M83248/2-932
117	30	5365-01-102-8027	11083	9S7583
117	31		11083	5P9513
117	32		11083	2V2962
117	33	4730-01-062-5932	11083	5S3779
117	34		11083	2V5036

CROSS-REFERENCE INDEXES

FIGURE AND ITEM NUMBER INDEX

FIG.	ITEM	STOCK NUMBER	CAGEC	PART NUMBER
117	35	5306-00-273-6357	11083	1A1460
117	36	5310-01-097-6720	11083	5P1076
117	37		11083	2V5038
117	38	4730-01-062-5932	11083	5S3779
117	39	5365-01-067-1426	11083	3S7116
117	40	4730-01-097-4728	11083	3S8570
117	41	5306-00-263-8978	11083	S1587
117	42	5340-01-060-0309	11083	1P4579
117	43	5330-01-026-9557	11083	4J0524
117	44		11083	2V2931
117	45	4730-01-063-5692	11083	3S8568
117	46	4730-01-066-4773	11083	5S3777
117	47	4720-01-097-0392	11083	2V2963
117	48		81343	J536S50
117	49	5340-00-282-7505	96906	MS21333-57
117	50	4710-01-242-4896	11083	2V9667
117	51		11083	5P0078
117	52	4730-00-202-8099	10001	12Z6126-6
117	53	4730-00-816-8558	11083	3R4463
117	54		11083	2V2991
118	1		11083	5R4349
118	1		11083	5R4349
118	2	5330-00-123-2727	11083	8M8515
118	3	5306-01-099-1624	11083	5R4384
118	4	5330-00-801-3354	25184	906-737-70
118	5	5305-00-708-3823	11083	7B3028
118	6		11083	5R4386
118	7		11083	2P5755
118	8	5365-01-064-6701	11083	8S6214
118	9	5365-01-064-6702	11083	8S6215
118	10		11083	6P8528
118	11	5330-00-948-6062	11083	8M5249
118	12		11083	5R4356
118	13	5306-00-423-8194	11083	1A2029
118	14	5310-00-407-9566	96906	MS35338-45
118	15		11083	2P5746
118	16		11083	2P5747
118	17	2520-01-059-9381	11083	2M1168
118	18	5306-00-263-7301	11083	0L1351
118	19		11083	2P5764
118	20		11083	5R4385
118	21	5365-00-411-4584	11083	9S4191
119	1	2520-00-929-5607	11083	3K9608
119	2		11083	3K9617
119	3		70960	960-13-43585
119	3		76260	2S-22373-1
119	4	4730-00-050-4208	96906	MS15003-1
119	5	2520-00-738-8662	11083	7H3958
119	5	3040-01-102-4166	11083	6K0885
119	6	5330-01-097-8235	11083	6K0884
119	7	5305-00-719-5239	96906	MS90727-116

CROSS-REFERENCE INDEXES

FIGURE AND ITEM NUMBER INDEX

FIG.	ITEM	STOCK NUMBER	CAGEC	PART NUMBER
119	8		95879	1641-B
119	9	5310-00-943-2141	96906	MS51968-15
119	10	5310-00-629-9613	19207	6299613
119	11		11083	L1732
119	12	4730-00-172-0022	96906	MS15003-2
119	13	5330-00-946-2871	11083	2D8540
119	14	5310-00-768-0318	96906	MS51967-14
119	15	5310-00-431-7239	11083	2M849
119	16		11083	3K9604
119	17	5306-00-426-3397	11083	1D4566
119	18	3110-00-190-9310	11083	3K9616
119	19	5330-00-714-2330	11083	9F1399
119	20	5365-01-108-8866	11083	3S328
119	21	5365-01-108-8867	11083	3S329
119	22		11083	7K6432
119	23	5305-00-071-2069	96906	MS90728-113
119	24		11083	3K9917
119	25	2520-00-929-5607	11083	3K9608
119	26	5330-00-999-5501	11083	2H2665
119	27	5365-00-981-8545	11083	2S1378
119	28	2520-00-495-6199	11083	2S0672
119	29		70960	960-04-43583
119	29		76260	2A-22371-1
119	30	5305-00-719-5239	96906	MS90727-116
119	31	2520-00-738-8662	11083	7H3958
119	31	3040-01-102-4166	11083	6K0885
119	32	5330-01-097-8235	11083	6K0884
119	33	5310-00-629-9613	19207	6299613
119	34	5305-00-719-5241	96906	MS90727-118
119	35		95879	1641-B
119	36	4730-00-050-4208	96906	MS15003-1
119	37	5306-00-426-2870	11083	L1558
119	38		70960	960-03-43582
119	38		76260	2A-21797-1
119	39	5305-00-719-5239	96906	MS90727-116
119	39	5306-00-263-7303	11083	S1603
119	40	2520-00-738-8662	11083	7H3958
119	40	3040-01-102-4166	78500	CP92N53
119	41	5330-01-097-8235	78500	SE-RUR21-1
119	42		95879	1641-B
119	42	4730-00-172-0049	96906	MS15006-1
119	43		11083	4V2753
120	1		70960	954-03-43581
120	2	2520-01-198-7408	81221	287126
120	3	4730-00-172-0049	11083	3H122
120	4		70960	954-60-43581
120	5	5310-01-102-9866	11083	5P7213
120	6	5305-00-719-5235	96906	MS90727-114
120	7	5310-00-629-9613	19207	6299613
120	8	5305-00-719-5239	96906	MS90727-116
121	1	4730-00-595-0385	79470	C3409X4

CROSS-REFERENCE INDEXES

FIGURE AND ITEM NUMBER INDEX

FIG.	ITEM	STOCK NUMBER	CAGEC	PART NUMBER
121	2	3120-01-127-5376	11083	4M5317
121	3	4820-00-637-2576	57733	47200
121	4	5305-01-131-2921	11083	1J2989
121	5		11083	1V6336
121	6		11083	6M1622
121	7		11083	1V5807
121	8	5315-01-066-9168	11083	2K9062
121	9	5310-00-470-9833	11083	3K5234
121	10	5310-00-490-9859	11083	2J3507
121	11	5365-01-100-8868	36540	7674021
121	12	2590-00-930-9407	11083	7M8485
121	13	5365-01-100-8867	36540	845621
121	14		11083	1V0383
122	1	2520-01-118-7506	11083	5K3559
122	2	3110-00-100-3638	11083	4B9373
122	3	3110-00-100-0605	11083	4B9374
122	4	5305-01-102-7344	11083	9S1362
122	5	5310-00-419-1363	11083	2S0115
122	6		11083	2V4734
122	7	3110-00-100-0612	11083	5P2526
122	8	3110-00-100-3651	11083	2K5065
122	9	5330-00-930-2476	11083	3D8422
122	10	5340-01-060-2023	11083	3P1389
122	11	5306-00-426-2947	11083	S214
122	12		11083	5K3661
122	13		11083	2V4462
122	14		11083	2V4371
122	15		11083	9K2805
122	16	5305-01-102-7345	11083	5K3628
122	17		11083	9K2549
122	18		11083	2V4461
122	19		11083	5P2523
122	20		11083	5P2525
122	21	5330-01-060-0737	11083	2D6533
122	22		11083	2V4897
122	23	5306-00-426-3605	11083	2A1538
122	24		11083	1P2694
122	25		11083	1P2695
122	26		11083	1V7885
122	27	5315-01-066-9168	11083	2K9062
122	28	5305-01-102-7343	11083	1D3419
122	29		11083	7K1695
122	30	5330-00-999-5501	11083	2H2665
122	31		11083	1V8574
122	32		11083	2V7170
122	33	2520-00-929-5607	11083	3K9608
122	34	5330-00-946-2871	11083	2D8540
122	35	5306-00-423-8194	11083	1A2029
122	36	5310-00-117-4788	11083	5M2894
122	37		11083	2V4440
122	38	5330-01-060-0745	11083	5S3676

CROSS-REFERENCE INDEXES

FIGURE AND ITEM NUMBER INDEX

FIG.	ITEM	STOCK NUMBER	CAGEC	PART NUMBER
122	39	5310-01-066-9165	11083	7J5367
122	40	5310-00-933-5940	60038	TW115
122	41	5306-00-426-3404	11083	1D4610
123	1		11083	4V8796
123	2		11083	4V8735
123	3	3120-01-105-1948	11083	3V4033
123	4		11083	4V8733
123	5		11083	9K2804
123	6	5306-00-862-8901	11083	L1169
123	7	5310-00-139-7030	11083	4D3704
123	8		11083	9K2803
123	9	5315-01-060-3748	11083	3D6509
123	10	3120-01-105-1935	11083	9K2514
123	11		11083	4V8795
123	12		11083	9K2515
124	1	5330-01-102-7978	11083	9M6097
124	2	5305-01-105-1804	11083	1D4646
124	3		11083	9M6098
124	4		11083	6M1601
124	5	5310-00-117-4788	11083	5M2894
124	6	5305-01-026-9518	11083	0S1571
124	7	4820-00-542-5683	04043	A-5679
124	8		11083	6M1606
124	9		11083	6M1592
124	10		11083	5P191
124	10		11083	7K4343
124	11	5310-00-009-7704	11083	9M2828
124	12	5310-00-490-9859	11083	2J3507
124	13		11083	1V6337
124	14	5315-01-066-9168	11083	2K9062
124	15	2590-00-930-9407	11083	7M8485
124	16	5365-01-100-8868	36540	7674021
124	17	5365-01-100-8867	36540	845621
124	18	5330-01-060-0737	11083	2D6533
124	19		11083	2V6129
124	20	5306-00-426-3605	11083	2A1538
124	21	5310-00-262-4789	11083	IF9233
124	22	4820-00-637-2576	57733	47200
124	23		11083	4M5317
124	24	5305-00-724-7222	96906	MS90728-164
124	25	5310-00-139-7030	11083	4D3704
124	26		11083	2V6143
124	27	5305-00-724-7236	96906	MS90728-169
124	28	5340-00-200-5218	11083	4B4098
124	29	5310-00-808-6600	11083	9H1024
124	30		11083	4V7193
124	31		11083	5S0085
124	32		11083	6M1605
124	33		11083	6M1592
124	34		11083	6M1622
124	35		11083	6M1560

CROSS-REFERENCE INDEXES

FIGURE AND ITEM NUMBER INDEX

FIG.	ITEM	STOCK NUMBER	CAGEC	PART NUMBER
124	36		11083	1V0383
125	1		11083	8K1691
125	2		11083	4V9553
125	3		11083	3V0848
125	4		11083	3V0849
125	5	4730-01-095-0075	11083	4S5414
125	6	4730-01-095-0833	11083	8S6393
125	7	4730-01-095-0834	11083	1P9919
125	8	4730-01-155-5055	11083	4S3652
125	9	5340-01-155-5280	11083	5M1198
125	10		11083	3V0851
125	10		11083	5P191
125	11	4730-00-143-3941	96906	MS51527A6
125	12	5330-00-801-3354	25184	906-737-70
125	13	4730-01-062-5214	11083	7J4026
126	1	5310-00-431-7239	11083	2M849
126	2	5306-00-272-4229	11083	1D4569
126	3	5305-00-253-5615	96906	MS21318-21
126	4		11083	7S4002
126	5	5306-00-426-2934	11083	0S1621
126	6		11083	7S3996
126	7	5306-00-426-2870	11083	L1558
126	8	5340-01-068-7154	11083	3S1262
126	9	5330-00-999-5501	11083	2H2665
126	10		11083	7S3998
126	11	5360-01-097-6811	11083	7S3997
126	12		11083	9M5590
126	13		11083	9M5615
126	14		11083	9M5614
126	15		11083	7S3994
126	16	3010-01-097-0513	11083	3V4046
126	17	3010-01-102-6721	11083	7S3992
126	18	2520-00-932-0762	11083	1S57
126	19		11083	1P4085
126	20		11083	3P3430
126	21	5330-00-893-9220	11083	8H8257
126	22		11083	3P3505
126	23	5330-00-641-2164	11083	3B9378
126	24	3110-00-144-8577	11083	3K2518
126	25	5365-00-923-4413	80756	RRT-450
126	26	5306-00-874-4001	11083	6H1717
126	27	5306-00-426-3080	11083	1A5822
126	28	5306-00-008-5943	11083	9H8260
126	29	5365-00-411-4584	11083	9S4191
126	30	5330-00-801-3354	25184	906-737-70
126	31		11083	7S3999
126	32		11083	7S4000
126	33	5330-01-098-6232	11083	7S4001
127	1	5315-01-099-0059	11083	4J5325
127	2	5315-00-839-2326	11083	3B4607
127	3	5340-01-180-8836	11083	2M4036

CROSS-REFERENCE INDEXES

FIGURE AND ITEM NUMBER INDEX

FIG.	ITEM	STOCK NUMBER	CAGEC	PART NUMBER
127	4	5310-00-297-8836	72915	120613
127	5	5355-01-097-8255	80813	250-702
127	6		11083	1V5774
127	7	5306-00-263-7301	11083	0L1351
127	8	5310-00-407-9566	96906	MS35338-45
127	9	5310-00-042-6376	24617	426376
127	10	5310-01-062-9899	11083	1H3338
127	11		11083	2V2538
127	12	2920-00-423-8362	11083	1B7904
127	13	3040-01-126-7461	06970	773-357-100-25
128	1		11083	1V5669
128	2		11083	1V4575
128	3		11083	5V5856
128	4	3110-01-060-3730	11083	1P9593
128	5	3110-01-060-3731	11083	1P9594
128	6	5330-01-105-6722	11083	9G5323
128	7		11083	5P4858
128	8		11083	4D4471
128	9		11083	8K0068
128	10		11083	9K0101
128	11		11083	8K0079
128	12	5310-00-978-5406	11083	2J3506
128	13	5310-00-419-1363	11083	2S0115
128	14	5330-01-097-6625	11083	8S6251
128	15		11083	1V5804
128	16		11083	2P1303
128	17		11083	1V4976
128	18		11083	9K7807
128	19		11083	3V7866
128	20	5330-00-801-3354	25184	906-737-70
128	21		11083	5K7696
128	22	3110-00-529-9205	11083	2D6511
128	23	3110-01-097-9999	11083	2P8353
128	24	5365-01-060-4700	11083	4D3173
128	25	5340-00-675-1297	11083	4F7356
128	26	5306-00-426-2934	11083	0S1621
128	27	5365-01-107-4480	11083	8K66
128	28		11083	8K0003
128	29	5306-00-426-3150	11083	1A8537
128	30		11083	9K0100
128	31		11083	3V5953
128	32	2590-00-930-9407	11083	7M8485
128	33	5365-01-026-9555	11083	9S4181
128	34	5310-00-584-5272	96906	MS35338-48
128	35	5306-00-424-0086	11083	7B3235
128	36	5330-01-097-9429	11083	7S8561
128	37	3040-01-179-6557	11083	2G4553
128	38	5306-01-060-4404	11083	8D3883
128	39		11083	7H0308
128	40		11083	2V4148
128	41		11083	2V4149

CROSS-REFERENCE INDEXES

FIGURE AND ITEM NUMBER INDEX

FIG.	ITEM	STOCK NUMBER	CAGEC	PART NUMBER
128	42	5310-01-103-1781	11083	8D3901
128	43	3110-01-097-9616	11083	5D3632
128	44		11083	8K0067
128	45		11083	8K0004
129	1		11083	4V7725
129	2		11083	5D6295
129	3		11083	5D6294
129	4		11083	1V6683
129	5	5306-01-051-0004	11083	5J5793
129	6	5330-00-081-3139	11083	4D1577
129	7		11083	4V7726
129	8		11083	6M8252
129	9		11083	6M9155
129	10		11083	1V7403
129	11	5330-01-124-2451	99517	A180-119MILP2573 2
129	12		30780	12HP5N
129	13	5306-00-637-4956	11083	0S1588
129	14	5330-00-367-5819	11083	9M5892
129	15		11083	1V5439
129	16	5310-00-431-7239	11083	2M849
129	17		11083	2A1531
129	18		11083	5D6329
129	19		11083	7D7504
129	20	5315-00-891-5955	11083	4H8380
130	1	5306-00-637-4956	11083	0S1588
130	2	5310-00-117-4788	11083	5M2894
130	3	4730-01-051-5256	11083	1P4577
130	4	5330-00-613-6516	11083	4J0520
130	5		11083	4V8370
130	6		11083	7S1712
130	7	5340-01-051-6767	11083	3S7166
130	8	4730-01-062-5203	11083	3S8360
130	9	4730-01-051-3134	11083	1P4576
130	10		11083	4J5267
130	11	5306-00-263-7301	11083	0L1351
130	12		11083	4S9191
130	13		11083	4V5260
130	14	5305-00-115-9526	96906	MS18154-58
130	15	5340-00-423-8320	11083	1B3057
130	16	5310-00-251-0088	15564	1377A
130	17	5340-01-099-0109	11083	5D4204
130	18	5340-01-099-0110	11083	3S3911
130	19	5310-00-407-9566	96906	MS35338-45
130	20	5340-01-067-8042	11083	4B0418
130	21	4710-01-242-4897	11083	2V2200
130	22	4730-00-314-7754	96906	MS51533B8
130	23		30780	8BTXS
130	24		11083	1V8074
130	25		11083	2V7964
130	26	4710-01-242-4898	11083	2V2199

CROSS-REFERENCE INDEXES

FIGURE AND ITEM NUMBER INDEX

FIG.	ITEM	STOCK NUMBER	CAGEC	PART NUMBER
130	27		30780	8BTXS
130	28	4730-00-314-7754	96906	MS51533B8
130	29	5306-00-698-2150	11083	L2070
130	30		11083	2V2198
130	31	4730-00-314-7754	96906	MS51533B8
130	32		30780	8BTXS
130	33	5330-00-167-5173	81349	M83248-2-908
130	34	5306-00-285-1368	11083	L1143
130	35	4730-01-066-4586	11083	8M0505
130	36		11083	2V2197
130	37		30780	8BTXS
130	38	4730-00-314-7754	96906	MS51533B8
130	39		11083	3V7899
130	40	5340-01-051-6767	11083	3S7166
130	41	4730-01-053-2694	11083	3S8363
130	42	5306-00-426-2974	11083	T65
130	43		11083	2V2175
130	44	5330-00-613-6519	11083	4J0522
130	45	4730-01-051-5257	11083	1P4578
130	46		11083	2V2182
130	47	5306-00-263-7301	11083	0L1351
130	48	5340-00-413-4384	11083	6L3351
130	49	5305-01-026-9518	11083	0S1571
130	50	2520-01-052-3917	11083	1P3704
130	51		11083	2V7967
130	52	4730-01-094-7469	11083	8S6417
130	53	4730-01-095-0075	11083	4S5414
130	54	4730-01-095-0833	11083	8S6393
130	55	4730-01-062-9928	22031	6400-6-4
130	56	5330-00-952-8008	11083	3J7354
130	57	5310-01-097-8955	11083	5P8244
130	58	5306-00-260-4513	11083	T320
130	59	5330-00-801-3354	25184	906-737-70
130	60	4730-01-051-2312	11083	3D7942
130	61		11083	2V4719
130	62		11083	2V2180
130	63	4730-01-062-7184	11083	7S0570
130	64	3120-00-236-1319	11083	3S7252
130	65	4730-01-095-8459	11083	7S0574
130	66		11083	2V2184
130	67	5330-01-043-5565	11083	1P3703
130	68		11083	2V2176
130	69	4730-01-062-5203	11083	3S8360
130	70	5340-01-051-6767	11083	3S7166
130	71		11083	8S4591
130	72		11083	2V2179
130	73	4730-01-053-2694	11083	3S8363
130	74	5340-01-051-6767	11083	3S7166
130	75	4730-01-062-5203	11083	3S8360
130	76		11083	1V9747
130	77	5305-00-688-2111	96906	MS90728-63

CROSS-REFERENCE INDEXES

FIGURE AND ITEM NUMBER INDEX

FIG.	ITEM	STOCK NUMBER	CAGEC	PART NUMBER
130	78		11083	2V2178
130	79	4730-01-053-2694	11083	3S8363
130	80	5340-01-051-6767	11083	3S7166
130	81		11083	5P7533
130	82		11083	7S1712
130	83		11083	2V7963
130	84	5305-01-015-6841	11083	0S1591
130	85	5340-00-404-4100	75272	COV-2113
130	86	5305-00-115-9526	96906	MS18154-58
130	87		11083	2V7966
130	88	5340-01-051-6767	11083	3S7166
130	89		11083	5S5287
130	90		11083	5S3049
131	1	5310-00-117-4788	11083	5M2894
131	2		11083	2M6835
131	3		11083	2V3767
131	4	5306-00-637-4956	11083	0S1588
131	5	5306-00-814-6565	11083	S1608
131	6	5930-00-363-6599	11083	7B4448
131	7	5305-01-026-9518	11083	0S1571
131	8	5330-01-043-5565	11083	1P3703
131	9		11083	1V2830
131	10	5365-00-478-2920	11083	9S4183
131	11	5330-01-124-2451	99517	A180-119MILP25732
131	12	5306-00-698-2150	11083	L2070
131	13	5306-00-426-2922	11083	S1573
131	14	5306-00-423-8316	11083	1B2886
131	15		11083	9J4080
131	16		11083	2V4399
131	17	5930-01-111-7673	11083	9W-2653
131	18	5330-00-952-8008	11083	3J7354
131	19		11083	2V3173
131	20	5330-00-801-3354	25184	906-737-70
131	21	4730-00-143-3941	96906	MS51527A6
131	22		11083	2V5707
131	23	5306-01-102-7319	11083	1N7284
131	24	4730-00-710-5571	56161	6945407
131	25	5330-01-124-2451	99517	A180-119MILP25732
131	26		11083	2V5706
131	27	5330-01-124-2451	99517	A180-119MILP25732
131	28		11083	2R6276
131	29		11083	8S6389
131	30	5340-01-051-6767	11083	3S7166
131	31	4730-01-062-5933	11083	5S5283
131	32	5330-00-613-6516	11083	4J0520
131	33	5305-00-688-2111	96906	MS90728-63
131	34	4730-01-051-5256	11083	1P4577
131	35	5365-01-035-4900	11083	9S8005

CROSS-REFERENCE INDEXES

FIGURE AND ITEM NUMBER INDEX

FIG.	ITEM	STOCK NUMBER	CAGEC	PART NUMBER
131	36	5330-00-167-5173	81349	M83248-2-908
131	37	2520-01-052-3917	11083	1P3704
131	38		11083	2V6778
131	39	5306-00-698-2177	11083	1D4556
131	40		11083	4S9191
131	41	5305-00-071-2055	96906	MS90728-89
131	42	5310-00-413-6522	11083	2S7593
131	43	5305-00-426-2936	11083	S1625
131	44	4730-01-062-5206	11083	3D7946
131	45		11083	2V5704
131	46	4730-00-491-9576	96906	MS51525A6
131	47	5330-01-088-6106	81349	M83248/2-914
131	48	4710-01-053-2705	11083	9S4188
131	49		11083	1V2832
131	50		11083	2V4400
131	51	5306-00-426-2932	11083	0S1619
132	1	5315-00-272-6760	11083	1B0676
132	2	5315-00-839-5822	96906	MS24665-353
132	3		11083	2V7226
132	4		11083	2V3764
132	5	5310-00-975-2075	96906	MS35691-21
132	6	5360-01-066-1431	11083	2P5677
132	7	5306-00-260-4508	11083	0S1594
132	10		11083	2V0003
132	11	5315-01-099-8048	11083	9F8910
132	12	5310-00-221-4696	11083	1B4442
132	13	5305-00-068-7837	96906	MS90728-5
132	14		83355	1-4INVVYLKWASH
132	15	5310-00-809-4058	96906	MS27183-10
132	16		11083	5J5437
132	17		11083	9S6465
132	18		11083	2V3761
132	19	5315-00-616-5524	96906	MS35756-10
132	20		11083	2V3717
132	21	5305-01-015-6841	11083	0S1591
132	22	5315-00-498-4657	11083	0S0175
132	23		11083	2D9860
132	24		11083	2V0014
132	25		11083	2P9858
132	26	5310-00-843-4593	11083	1B4430
132	27		11083	2V0016
132	28	3110-01-168-1053	11083	6D3787
132	29		11083	2V0015
132	30	5305-01-102-1825	11083	2A1396
132	31	5310-00-851-2682	96906	MS35691-17
132	32		11083	2V3769
132	33	4730-01-062-5206	11083	3D7946
132	33	5306-00-263-7301	11083	0L1351
132	35		11083	2V5705
132	39		11083	4K3777
132	40	5310-00-445-4633	11083	9M1311

CROSS-REFERENCE INDEXES

FIGURE AND ITEM NUMBER INDEX

FIG.	ITEM	STOCK NUMBER	CAGEC	PART NUMBER
132	41		11083	2V3763
132	42	5310-00-251-0088	15564	1377A
132	43		11083	3G2228
132	44		11083	2V3172
132	46		11083	7K4994
132	46	4730-01-051-8745	11083	6K9194
132	47		11083	2V5702
132	48	4730-01-155-5059	11083	6M6853
132	49		11083	2V5703
132	50	5306-01-094-9106	11083	0S1590
132	51		11083	7K4994
132	52	5330-00-894-7299	11083	9H6761
132	53		11083	9J4693
132	54	5305-00-008-5971	11083	8S9089
132	55		11083	2P8447
132	56	5340-01-062-5196	11083	2M8340
132	58	5340-01-053-3843	11083	1M1341
133	1		11083	9J8675
133	2	2520-01-063-0771	11083	5J9443
133	3	5310-00-407-9566	96906	MS35338-45
133	4	5306-01-094-9106	11083	0S1590
133	5	5310-00-739-9977	11083	5M6708
133	6	2520-01-063-0781	11083	6J366
133	7		53477	S-3268
133	8		53744	5934
133	9	2520-01-063-0814	11083	7J5311
133	10	2520-01-063-0815	11083	7J5352
133	11		11083	9J9318
133	12	5330-00-034-2335	11083	6J9354
133	13	5306-00-732-7714	11083	1D4627
133	14	2520-01-063-0813	11083	7J4704
133	15	5330-00-298-5837	11083	5F3144
133	16	5330-00-561-8286	11083	2K4096
133	17	5305-01-026-9518	11083	0S1571
133	18	2520-01-063-0812	11083	7J4699
133	19	5330-01-097-6624	11083	1P3700
133	20	5306-00-637-4956	11083	0S1588
133	21		11083	8J1543
134	1	4320-01-242-3022	11083	9J4695
134	2	5306-00-637-4956	11083	0S1588
134	3	5310-00-407-9566	96906	MS35338-45
134	4		11083	5J1191
134	5	5330-00-593-1193	11083	3H1461
134	6		11083	7M8538
134	7	5365-01-066-7039	11083	5J9100
134	8		11083	5J1188
134	9		11083	4J8971
134	10		11083	4J3297
134	11		11083	9J4696
134	12	5310-01-266-2481	11083	4B4278
134	13	5330-00-741-0674	11083	5F1678

CROSS-REFERENCE INDEXES

FIGURE AND ITEM NUMBER INDEX

FIG.	ITEM	STOCK NUMBER	CAGEC	PART NUMBER
134	14	4730-00-924-7129	11083	1J9693
134	15	5330-00-605-1009	73680	23548-4754
134	16	5365-01-035-4900	11083	9S8005
134	17		81349	M832482908
134	18		11083	4J3953
134	19	5310-01-059-7159	11083	2H3788
134	20		11083	4J3832
135	1	5306-00-426-2974	11083	T65
135	2	5310-00-407-9566	96906	MS35338-45
135	3		11083	3S7446
135	4	5330-00-436-3369	11083	4J2506
135	5	5330-00-937-5155	11083	2K8199
135	6		11083	8J8327
135	7	5330-01-097-6634	11083	3S7450
135	8	5330-00-310-6575	11083	6F6672
135	9		11083	3S7445
135	10		11083	8J8328
135	11	5365-00-194-4472	11083	4J7533
135	12	5330-01-148-5891	59556	K-500-EN-0431
135	13		11083	3G0730
135	14	5365-00-804-9739	96906	MS16625-1087
135	15	5330-01-098-3167	11083	8S6959
135	16	5330-00-580-1227	11083	5H6005
135	17		11083	7K6116
135	18	5330-00-952-8008	11083	3J7354
135	19		30780	4HP5NS
136	1	5306-00-637-4956	11083	0S1588
136	2	5310-00-407-9566	96906	MS35338-45
136	3		11083	5J9260
136	4	5330-00-948-6924	11083	4J8996
136	5	5340-00-949-0311	11083	3J7470
136	6	5365-00-944-0863	11083	3J7473
136	7	5360-00-597-8351	11083	4F7115
136	8	5315-00-246-0998	11083	6J1311
136	9	4820-00-923-7042	11083	1J8497
136	10	5365-01-102-8028	11083	9S4189
136	11	5330-00-167-5174	81349	M83248/2-910
136	12	5305-00-725-2317	96906	MS90728-64
136	13	5330-00-952-8008	11083	3J7354
136	14	5365-00-175-5051	11083	9S4182
136	15		11083	6J7363
136	16		30780	4HP5NS
136	17	5360-00-664-4194	11083	9F6705
136	18	4810-01-066-5266	11083	1H0337
136	19	5305-00-115-9526	96906	MS18154-58
136	20		11083	9J4694
136	21	5330-00-801-3354	25184	906-737-70
136	22	5365-01-036-0010	11083	9S8004
136	23		11083	4J6485
136	24	5306-00-260-4508	11083	0S1594
136	25	4730-01-051-3134	11083	1P4576

CROSS-REFERENCE INDEXES

FIGURE AND ITEM NUMBER INDEX

FIG.	ITEM	STOCK NUMBER	CAGEC	PART NUMBER
136	26	5305-00-688-2111	96906	MS90728-63
136	27	5330-00-166-1110	81349	M83248/2-216
136	28	5340-01-161-2783	11083	4J6806
136	29		11083	4J6809
136	30		11083	4J6808
136	31	5330-00-167-5173	81349	M83248-2-908
136	32	5365-01-035-4900	11083	9S8005
136	33	4730-01-051-5256	11083	1P4577
136	34		11083	8J4508
136	35		11083	4J6750
136	36	5330-00-557-8425	11083	4J0519
136	37	5330-00-922-6275	11083	4J525
136	38		11083	4J6748
136	39	5365-01-246-4101	11083	5J0835
136	40		11083	0S1850
136	41		11083	6J9684
136	42	3110-00-731-1593	11083	7B6368
136	43	5310-01-102-2479	11083	4J6583
136	44	5330-00-166-1098	81349	M83248/2-110
137	1	5305-01-026-9518	11083	0S1571
137	2	5310-00-407-9566	96906	MS35338-45
137	3		11083	9S4686
137	4	5330-00-801-3354	25184	906-737-70
137	5		11083	9J4077
137	6		11083	3K2478
137	7		11083	4J6803
137	8	5330-00-580-1227	11083	5H6005
137	9	5330-00-929-5533	11083	2J1826
137	10		11083	9J4076
137	11		11083	4J6802
137	12		11083	4J3295
137	13	5306-00-637-4956	11083	0S1588
137	14	5310-00-407-9566	96906	MS35338-45
137	15		11083	5J0570
137	16		11083	4J3303
137	17		11083	4J3302
137	18	5330-00-945-0564	11083	4K4114
137	19		11083	9J4079
137	20	5330-00-999-5502	11083	8M4390
137	21		11083	9J4074
137	22		11083	9J4078
137	23	5310-01-059-7159	11083	2H3788
137	24	5365-01-247-9062	11083	9J5624
137	25	5305-00-115-9526	96906	MS18154-58
137	26	4730-01-051-5256	11083	1P4577
137	27	5306-00-423-8194	11083	1A2029
137	28	5310-01-266-2481	11083	4B4278
137	29		11083	9J4075
137	30	5330-00-580-1215	11083	6F5559
137	31	5365-00-924-7128	11083	2J2864
137	32	5330-00-167-5173	81349	M83248-2-908

CROSS-REFERENCE INDEXES

FIGURE AND ITEM NUMBER INDEX

FIG.	ITEM	STOCK NUMBER	CAGEC	PART NUMBER
137	33	5365-01-035-4900	30780	8HP5N
138	1		11083	1V9645
138	2		11083	9K4934
138	3	5310-00-220-6552	11083	9S1328
138	4	5330-00-854-1603	11083	8F5340
138	5	3110-00-902-4269	60380	B168XPSOH
138	6	5310-01-105-1849	11083	2V2043
138	7	5310-01-102-9867	11083	5D2653
138	8		11083	1V9813
138	9		11083	2V2044
138	10	5306-01-103-7039	11083	1T720
138	11		11083	2V6570
138	12		70485	P60
138	13	5306-00-423-8194	11083	1A2029
138	14	5310-00-407-9566	96906	MS35338-45
138	15	5310-01-266-2481	11083	4B4278
138	16		11083	9K4929
138	17		11083	4H1477
138	18		11083	2V2046
138	19	2590-01-101-9630	06970	774-M-TT-2-80
138	20	5340-01-059-9645	11083	4J2701
138	21	5315-00-431-7315	11083	3B4615
138	22	5306-00-263-8978	11083	S1587
138	23		11083	9K3837
138	24	5310-00-999-8288	11083	9M6527
138	25	5306-00-260-4508	11083	0S1594
138	26		11083	4H7993
138	27	5315-00-619-2962	11083	1J4384
139	1	5306-00-260-4508	11083	0S1594
139	2	5310-01-094-8810	11083	5P1075
139	3	2530-00-274-4510	11083	9F2167
139	4		11083	1V7443
139	5		11083	1V7444
139	6	5310-00-167-0822	88044	AN960-716
139	7	5310-00-880-7745	96906	MS51968-11
139	8	4710-01-243-0092	11083	1V7439
139	9	4730-00-834-5035	11083	3J7352
139	10	5330-00-952-8008	11083	3J7354
139	11		11083	9K3186
139	12		11083	8K0099
139	13		61208	M201213D
139	14	5330-00-167-5173	81349	M83248-2-908
139	15	4730-01-066-4586	11083	8M0505
139	16	5330-00-599-2183	11083	1H8278
139	17		11083	7D4512
139	18	5310-00-470-9833	11083	3K5234
139	19	5310-00-490-9859	11083	2J3507
139	20	5310-00-407-9566	96906	MS35338-45
139	21	5306-00-226-4827	96906	MS90728-34
139	22		11083	1V7440
139	23	5310-00-812-4283	98441	8WLNS

CROSS-REFERENCE INDEXES

FIGURE AND ITEM NUMBER INDEX

FIG.	ITEM	STOCK NUMBER	CAGEC	PART NUMBER
139	24		11083	4V8886
139	25	2530-00-891-4411	11083	4H1394
139	26	4730-01-208-2036	11083	2P1325
139	27	5310-01-143-0560	11083	5D1753
139	28		11083	4V8884
140	1	2530-01-245-6904	11083	9V1292
140	2	5330-01-124-2451	99517	A180-119MILP2573 2
140	3	2640-01-144-1573	11083	5V8927
140	4	2640-00-995-3138	27783	670A-198
140	5		79934	TRJ670-S
140	6	2640-00-537-2251	27783	1449-T
140	7	2640-00-678-8616	53477	4659
140	8		08129	0S3533
140	9	5330-01-128-4134	12195	07118800
140	10		08129	8B33HT31
140	11		08129	523560950
140	12		08129	GY31C
140	13	5330-01-124-2451	99517	A180-119MILP2573 2
140	14		30780	12HP5N
140	15	5310-00-978-5406	11083	2J3506
140	16	5310-01-102-2477	11083	5P8248
141	1	2610-01-114-3732	12195	35/65-R33XRDN-1A
142			11083	2V9302
142	1		11083	2V9346
142	2		11083	5P0190
142	3	4730-00-816-8558	11083	3R4463
142	4	4730-00-202-8099	10001	12Z6126-6
142	5	4730-00-143-3941	96906	MS51527A6
142	6	5330-00-801-3354	25184	906-737-70
142	7		11083	2V9298
142	8	4730-01-095-0833	11083	8S6393
142	9	4730-01-095-0075	11083	4S5414
142	10	4730-01-094-7469	11083	8S6417
142	11		11083	8J2318
142	12	9905-01-104-6446	11083	1V6275
142	13		11083	7D0874
142	14	5306-00-874-4001	11083	6H1717
142	15	5310-00-930-7013	11083	4B4280
142	16	5310-00-584-5272	96906	MS35338-48
142	17	9905-01-105-4111	11083	1V6276
142	18	5305-01-062-6007	11083	2H6488
142	19	5310-00-768-0318	96906	MS51967-14
142	20	5306-00-814-8957	11083	8F8804
142	21		11083	1V8976
142	22	9905-01-109-4261	11083	1V6274
143	1		11083	2V9347
143	2	4730-01-023-8534	11083	8707
143	3	5310-01-024-3112	11083	17014
143	4	5330-00-165-1980	81349	M83248/2-905

CROSS-REFERENCE INDEXES

FIGURE AND ITEM NUMBER INDEX

FIG.	ITEM	STOCK NUMBER	CAGEC	PART NUMBER
143	5	4730-00-906-1527	79470	C5515X5
143	6		11083	2V9348
143	7	4730-01-023-8534	11083	8707
143	8	4730-00-287-0276	18876	8168376
143	9	5306-00-426-5062	11083	4F4879
143	10	5310-00-117-4788	11083	5M2894
143	11		11083	2R6806
143	12	4820-01-161-9628	11083	8J1553
143	13	5306-00-685-2384	14351	13XX3958
143	14	5310-00-407-9566	96906	MS35338-45
143	15		11083	9K8025
143	16	5310-00-208-9476	11083	1D5117
143	17	4720-01-181-8496	11083	2V9301
143	18	4730-01-095-0833	11083	8S6393
143	19	4730-01-094-7469	11083	8S6417
143	20	4730-01-095-0075	11083	4S5414
143	21		11083	2V9302
143	22	4730-01-094-7469	11083	8S6417
143	23	4730-01-095-0075	11083	4S5414
143	24	4730-01-095-0833	11083	8S6393
143	25	4730-01-094-7469	11083	8S6417
143	26	4730-01-094-7469	11083	8S6417
143	27	4730-01-095-0075	11083	4S5414
143	28		96906	MMS90728-8
143	29		11083	1V7944
143	30	4730-01-162-6354	11083	316281
143	31	5340-00-426-4819	11083	1S1015
143	32	5310-00-251-0088	15564	1377A
143	33	5305-00-115-9526	96906	MS18154-58
143	34		11083	3V0778
143	35		11083	5P5303
143	36	5306-00-263-7301	11083	0L1351
143	37	9905-01-104-6445	11083	1V6277
143	38	4730-01-106-6789	11083	5P419
143	39		11083	2V7777
143	40	5306-01-094-9106	11083	0S1590
143	41	5365-00-411-4584	11083	9S4191
143	42	4730-01-051-2313	11083	4K6297
143	43		11083	2V9345
143	44		30780	8BTXS
143	45	4730-00-314-7754	96906	MS51533B8
143	46	4730-01-074-0907	96906	MS51525A8-10
143	47	5330-00-167-5174	81349	M83248/2-910
143	48	5340-00-426-4673	11083	9S1310
144	1		96151	212-1024-001
144	2	3120-01-087-7063	96151	8329
144	3	3110-01-031-9372	11083	5L1100
144	4	5330-00-527-7939	96906	MS9021-225
144	5	5365-01-085-3125	11671	14317
144	6	5330-00-797-8389	96151	20599
144	7	3120-01-068-3473	96151	7443

CROSS-REFERENCE INDEXES

FIGURE AND ITEM NUMBER INDEX

FIG.	ITEM	STOCK NUMBER	CAGEC	PART NUMBER
144	8	5330-00-854-1603	11083	8F5340
144	9		96151	8344
144	10	2530-00-716-7950	96151	370
144	11	5315-00-129-6499	96151	15
144	12	5330-01-095-1255	11083	9J5686
144	13	5977-01-095-5206	96151	7970
144	14	3040-00-124-0880	96151	5126
144	15	5310-01-097-5847	96151	6901-3
144	16		96151	8436-4
144	17		96151	5389-10
144	18	2530-01-081-2752	96151	8438
144	19	5340-00-598-9577	17875	6862
144	20	3110-01-100-9048	96151	18001
144	21	5330-00-591-3112	11083	5F9144
144	22	4820-01-079-1486	96151	8318
144	23	5330-00-920-6924	11083	1H1023
144	24	5305-01-097-8184	96151	14380
145	1		11083	2V7849
145	2		11083	1V5775
145	3	3110-00-930-6289	60380	JTT1211
145	4		11083	8K7872
145	5	5306-01-102-7320	11083	5L4041
145	6	5310-00-407-9566	96906	MS35338-45
145	7	5305-01-015-6841	11083	0S1591
145	8	5315-00-839-5820	96906	MS24665-134
145	9		11083	4B4274
145	10		11083	1V7323
145	11		11083	1V4709
145	12		11083	3N2818
145	13	5315-01-098-6463	11083	9K6768
145	14	5310-01-101-6056	11083	2V9166
145	15	5360-00-249-3502	11083	4B4229
145	16	5365-00-715-1152	57931	5100-37
145	17	5315-01-099-0060	11083	1P3321
145	18		11083	9K6769
145	19		11083	1V5776
145	20		11083	1V5770
145	21	5315-01-098-6453	11083	2V9167
145	22		11083	1V5655
145	23		60380	EA38688
145	24	5310-00-005-0699	11083	1D5121
145	25	5310-01-062-7144	11083	4B4284
145	26	5315-01-099-7351	11083	1V5772
145	27		11083	2V5903
145	28		92250	KR8
145	29	5315-01-103-0061	11083	9K6762
145	30	5355-01-226-8782	80813	250-007
145	31		11083	9K6666
145	32	5305-01-097-9388	11083	4S4465
145	33		11083	2V7607
146	1	5310-00-045-1079	24617	145036

CROSS-REFERENCE INDEXES

FIGURE AND ITEM NUMBER INDEX

FIG.	ITEM	STOCK NUMBER	CAGEC	PART NUMBER
146	2	5310-01-066-0499	11083	6F0253
146	3	5310-00-109-7638	15434	S658
146	4		11083	1V9385
146	5		79136	77-01
146	6	5365-00-252-7746	79136	5102-100MD
146	7	3110-00-100-2367	43334	93L05
146	8	5365-00-285-6726	80756	RRT-187
146	9	5330-00-801-3354	25184	906-737-70
146	10	4730-00-143-3941	96906	MS51527A6
146	11		11083	2V3219
146	12		11083	4V6133
146	13		11083	4S5413
146	14	9905-01-104-6445	11083	1V6277
146	15		11083	3V5648
146	16	4730-01-094-7469	11083	8S6417
146	17		11083	8S3879
146	18	4730-01-095-0834	11083	1P9919
146	19		11083	5P0035
146	20		11083	8S6721
146	21	4730-01-095-0075	11083	4S5414
146	22	9905-01-104-6446	11083	1V6275
146	23	9905-01-109-4261	11083	1V6274
146	24	4730-01-094-7469	11083	8S6417
146	25	9905-01-105-4111	11083	1V6276
146	26	4730-00-491-9576	96906	MS51525A6
146	27	5330-01-155-4283	11083	1W3900
146	28	4730-01-286-0225	11083	2P1278
146	29	5310-00-407-9566	96906	MS35338-45
146	30	5306-00-637-4956	11083	0S1588
146	31		11083	1V6349
146	32		11083	9K5636
146	33		11083	1V5606
146	34		20568	WS-13
146	35	5305-00-432-7954	96906	MS51861-39
147	1	5310-00-431-7239	11083	2M849
147	2	5306-00-455-0459	11083	9S1366
147	3	5306-00-263-8978	11083	S1587
147	4		11083	2V6371
147	5	5315-01-109-7651	11083	9K723
147	6		11083	9K0724
147	7	4730-00-050-4208	96906	MS15003-1
147	8		11083	9K0726
147	9		60038	HM218200-4-468
147	10	3110-00-618-0249	11083	6D7690
147	11	5330-01-098-3169	11083	7K9212
147	12		11083	9K0725
147	13	5365-01-107-4914	11083	9K721
147	14	4820-00-637-2576	57733	47200
147	15	5305-01-062-6007	11083	2H6488
147	16		11083	1A7669
147	17	5315-01-134-8857	11083	9K804

CROSS-REFERENCE INDEXES

FIGURE AND ITEM NUMBER INDEX

FIG.	ITEM	STOCK NUMBER	CAGEC	PART NUMBER
147	18		11083	9K0803
147	19		11083	9K0805
147	20		11083	5P9769
147	21		11083	5P2525
147	22	5330-01-098-3168	11083	3K6455
147	23		11083	9K0806
147	24		11083	9K0802
147	25	5365-01-099-2941	11083	3K6412
147	26		11083	4V4483
147	27	5310-00-419-1363	11083	2S0115
147	28	5306-00-423-8069	11083	0L1178
147	29	5306-00-273-6357	11083	1A1460
147	30	5365-01-124-6834	11083	3K6401
148	1	5330-00-663-5709	11083	5F3106
148	2		11671	14145
148	3		11671	11089
148	4	5310-00-139-7030	11083	4D3704
148	5	5305-00-724-7221	96906	MS90728-163
148	6		11671	48150
148	7	5310-01-128-5136	92595	HR10
148	8	5310-01-068-2238	11671	11147
148	9	5307-01-114-1318	11671	11688-4
148	10		29337	74-250
148	11		11671	47642
148	12		11671	12717
148	13		11671	11650
148	14		11671	15587
148	15		11671	20-16KH3390
148	16		86579	55-157-19009
148	17		11671	21534
148	18		11671	25768
148	19		11671	22578
148	20		11671	25873
148	21		11671	25082
148	22		79136	58-A5000-112
148	23		11671	23324
148	24		11671	25335
148	25		11671	21677
148	26		11671	13048
148	27		11671	47476
148	28		11671	12717
148	29		11671	22449
148	30		11671	25777
148	31		11671	22693
148	32		11671	25862
148	33		11671	25082
148	34	3020-00-300-6843	11671	24066
148	35	3805-00-320-4991	11671	22527
148	36		11671	21678
148	37		86579	55-252-17007
148	38		11671	44916

CROSS-REFERENCE INDEXES

FIGURE AND ITEM NUMBER INDEX

FIG.	ITEM	STOCK NUMBER	CAGEC	PART NUMBER
148	39	3120-00-338-5897	11671	11669
148	40		11671	62D-8-50HG8
148	41	5310-00-332-5036	11671	11146
148	42		11671	46031
148	43	3120-00-338-5897	11671	11669
148	44	3805-00-320-5007	11671	22528
149	1		11671	47445
149	2		11671	13415
149	3		86579	55-156-19009
149	4		11671	14021
149	5		11671	14023
149	6		11671	14022
149	7	5340-01-288-7013	11671	22091
149	8		11671	22088
149	9	5340-01-288-1632	11671	22792
149	10		11671	25023
149	11		11671	24978
149	12		86579	55-028-19009
149	13		29337	74-500
149	14	5310-00-332-5036	11671	11146
149	15	5305-00-071-2083	96906	MS90728-127
149	16	5340-01-288-7014	11671	22090
149	17		11671	20-16KH3390
149	18	5330-00-242-7403	25184	906-6-8309
149	19		11671	65-6BP
149	20		11671	47005
149	21		11671	13415
150	1		11083	3G0839
150	2		11083	8J5994
150	3	5310-00-629-9613	19207	6299613
150	4	5306-00-455-0459	11083	9S1366
150	5	5330-00-429-3542	11083	2S4078
150	6	5365-00-476-4985	11083	9S8010
150	7	5330-00-741-2096	11083	6H3977
150	8	5330-00-953-1624	11083	1S668
150	9		11083	3G4106
150	10	5330-00-801-3354	25184	906-737-70
150	11		30780	6HP5N
150	12		11083	7J2656
150	13	5330-01-102-1814	11083	3G3281
151	1	3805-01-053-2692	11083	1P4582
151	2	5310-01-098-0624	11083	5P8245
151	3	5330-01-069-0760	11083	4J0527
151	4	5306-00-263-8978	11083	S1587
151	5		11083	2V2986
151	6		11083	7S8439
151	7	3830-01-051-7599	11083	3S8330
151	8	4730-01-053-8079	11083	7S9370
151	9	5305-00-071-2069	96906	MS90728-113
151	10	5930-01-200-7882	43249	F-75443-AL
151	11	5330-00-167-5173	81349	M83248-2-908

CROSS-REFERENCE INDEXES

FIGURE AND ITEM NUMBER INDEX

FIG.	ITEM	STOCK NUMBER	CAGEC	PART NUMBER
151	12		11083	4V7056
151	13	5365-01-113-0709	50948	1N5998
151	14	5330-01-097-6618	11083	1N6002
151	15		11083	3P0969
151	16		11083	4V6954
151	17		11083	1V8113
151	18	2590-00-930-9407	11083	7M8485
151	19	5365-01-026-9555	11083	9S4181
151	20	5306-00-253-7864	11083	8M2530
151	21	5330-01-026-9557	11083	4J0524
151	22	5306-00-273-6357	11083	1A1460
151	23		11083	1A7669
151	24		11083	2A1531
151	25	5310-00-629-9613	19207	6299613
151	26	5310-00-768-0318	96906	MS51967-14
151	27	5306-00-423-8117	11083	0S1595
151	28	5310-01-097-6720	11083	5P1076
151	29		11083	4V7024
151	30	5340-01-060-0309	11083	1P4579
151	31		11083	1V9414
151	32	5330-01-060-0308	11083	1P3705
151	33		11083	1P5762
151	34	5306-00-260-4508	11083	0S1594
151	35	5310-01-266-2481	11083	4B4278
151	36		11083	2V2423
151	37		11083	1V9415
151	38	5330-01-053-2691	11083	1P3707
151	39		11083	3V2660
151	40	4730-01-107-2346	11083	3S9329
151	41	3830-01-051-7599	11083	3S8330
151	42		11083	3S9331
151	43		11083	2V7709
151	44	5310-00-584-5272	96906	MS35338-48
151	45	5306-00-268-5798	11083	L1329
151	46	5310-01-097-6720	11083	5P1076
151	47		11083	9K2522
151	48		11083	2V7708
151	49		11083	3V2661
151	50		11083	3S9330
151	51	3830-01-051-7599	11083	3S8330
151	52		11083	3S9331
151	53	5330-00-663-5709	11083	5F3106
151	54		11083	3V0839
151	55	5306-00-426-3397	11083	1D4566
151	56		11083	2V2421
151	57	5305-00-115-9526	96906	MS18154-58
151	58		11083	2V2979
151	59		11083	3S9327
151	60	3830-01-051-7599	11083	3S8330
151	61		11083	5P3229
151	62		11083	2V2988

CROSS-REFERENCE INDEXES

FIGURE AND ITEM NUMBER INDEX

FIG.	ITEM	STOCK NUMBER	CAGEC	PART NUMBER
151	63		11083	7S1074
151	64	5365-01-067-1426	11083	3S7116
151	65		11083	8S8957
151	66	5330-00-613-6519	11083	4J0522
151	67	5305-01-026-9518	11083	0S1571
151	68		11083	4V7055
152	1		11083	5V5734
152	2	5310-00-117-4788	11083	5M2894
152	3	5306-00-637-4956	11083	0S1588
152	4		11083	2V6761
152	5	4730-01-064-7391	11083	3S8499
152	6	3120-00-236-1319	11083	3S7252
152	7		11083	7S0572
152	8	5306-00-426-2932	11083	0S1619
152	9		11083	2V6746
152	10	5330-00-613-6516	11083	4J0520
152	11	4730-01-051-5256	11083	1P4577
152	12	5305-00-688-2111	96906	MS90728-63
152	13	5330-00-613-6516	11083	4J0520
152	14		11083	2V6758
152	15	4730-01-051-7600	11083	3S8496
152	16	3120-00-236-1319	11083	3S7252
152	17	4730-01-062-7184	11083	7S0570
152	18	5330-01-026-9557	11083	4J0524
152	19	5310-00-251-0088	15564	1377A
152	20	5330-01-069-0760	11083	4J0527
152	21	3805-01-053-2692	11083	1P4582
152	22	5306-00-263-8978	11083	S1587
152	23		11083	4V7991
152	24		11083	8S3649
152	25	3830-01-051-7599	11083	3S8330
152	26	4730-01-053-8079	11083	7S9370
152	27	4730-01-051-5257	11083	1P4578
152	28	5330-00-613-6519	11083	4J0522
152	29	5310-01-097-8955	11083	5P8244
152	30	5306-00-916-1943	11083	3H5368
152	31		11083	2V2108
152	32		11083	7S1707
152	33	5365-01-067-1426	11083	3S7116
152	34	4730-01-066-4773	11083	5S3777
153	1	5306-00-273-6357	11083	1A1460
153	2	5330-01-053-2691	11083	1P3707
153	3		11083	4V6148
153	4	5365-01-113-0709	50948	1N5998
153	5	5330-01-097-6618	11083	1N6002
153	6	5330-01-097-6623	11083	1P3709
153	7	5306-00-423-8316	11083	1B2886
153	8	5310-01-098-0624	11083	5P8245
153	9		11083	4V7992
153	10	5365-01-113-0709	50948	1N5998
153	11	5330-01-097-6618	11083	1N6002

CROSS-REFERENCE INDEXES

FIGURE AND ITEM NUMBER INDEX

FIG.	ITEM	STOCK NUMBER	CAGEC	PART NUMBER
153	12	5305-01-062-6007	11083	2H6488
153	13	5310-00-930-7013	11083	4B4280
153	14		11083	1V9259
153	15	5310-01-098-0624	11083	5P8245
153	16		11083	5V1019
153	17		11083	2V2109
153	18	4730-01-066-4773	11083	5S3777
153	19	5365-01-067-1426	11083	3S7116
153	20		11083	7S1707
153	21		11083	5V5802
153	22	5340-01-105-2272	11083	1P8016
153	23	5306-00-424-0086	11083	7B3235
153	24	5310-00-768-0318	96906	MS51967-14
153	25		11083	2V6760
153	26	4730-01-062-7184	11083	7S0570
153	27	3120-00-236-1319	11083	3S7252
153	28		11083	3S8498
154	1		11083	9J8165
154	2	5330-01-098-9988	11083	5J3616
154	3	5330-01-113-1318	73680	17159-1109
154	4	5330-00-935-9127	11083	4J3515
154	5		11083	9J8171
154	6		11083	9J8172
154	7		11083	9J5875
154	8		11083	3G9886
154	9	5330-00-561-8286	11083	2K4096
154	10	5330-00-298-5837	11083	5F3144
154	11		11083	9J8166
154	12		11083	9J5875
154	13	5310-00-460-8239	11083	5J5731
154	14	3830-00-929-3501	11083	4J3420
154	15	3830-00-929-8149	11083	5J5020
154	16	2530-01-053-2698	11083	7J5525
154	17	5310-01-102-2477	11083	5P8248
154	18	5306-00-426-3139	11083	1A8063
154	19	5330-00-008-5957	11083	7K9204
154	20		11083	2V4700
154	21		95879	1610-BL
154	22	5310-01-098-0626	11083	9M2421
154	23	5310-00-419-1363	11083	2S0115
154	24	5306-00-426-3402	11083	1D4608
154	25	5306-00-423-8069	11083	0L1178
155	1		11083	8J6099
155	2		11083	8J6790
155	3	4820-01-090-2178	11083	1J8945
155	4	5360-00-851-6804	11083	1J9533
155	5	5330-00-922-6275	11083	4J525
155	6		11083	8J6784
155	7	5306-00-263-8978	11083	S1587
155	8	5310-00-584-5272	96906	MS35338-48
155	9	5306-00-423-8316	11083	1B2886

CROSS-REFERENCE INDEXES

FIGURE AND ITEM NUMBER INDEX

FIG.	ITEM	STOCK NUMBER	CAGEC	PART NUMBER
155	10	5330-00-921-0054	11083	4J528
155	11	5330-00-166-1110	81349	M83248/2-216
155	12		11083	8J6785
155	13	3120-01-029-2580	11083	3S3433
155	14		11083	8J6788
155	15	5340-01-060-0309	11083	1P4579
155	16	5305-00-071-2069	96906	MS90728-113
155	17	5310-00-930-7013	11083	4B4280
155	18	5330-01-026-9557	11083	4J0524
155	19		11083	8J6782
155	20	5305-01-113-9768	11083	6B2121
155	21	5365-00-194-4472	11083	4J7533
155	22	5365-00-194-4472	11083	4J7533
155	23	5365-00-476-4985	11083	9S8010
155	24	5330-00-429-3542	11083	2S4078
155	25	5365-01-138-4783	11083	5J9101
155	26		11083	5J3419
155	27		11083	8J6783
155	28	5305-00-708-3823	11083	7B3028
156	1	5305-01-164-2318	11083	9S6155
156	2	5330-00-165-1980	81349	M83248/2-905
156	3	5360-00-249-3471	11083	1A8096
156	4	3110-00-011-9935	11083	4B9782
156	5	5365-01-108-7881	11083	9J477
156	6	5330-01-088-6106	81349	M83248/2-914
156	7	5360-00-597-4697	11083	7B8194
156	8	4820-01-162-4342	11083	8J1552
156	9	5305-01-097-9884	11083	6J4608
156	10	5310-00-407-9566	96906	MS35338-45
156	11	5310-00-595-6318	71791	128930-1
156	12		11083	8J2010
156	13	5330-00-605-1009	73680	23548-4754
156	14		11083	8J1559
156	15	2530-01-105-2649	11083	6J463
157	1	4730-01-064-3790	11083	9S8008
157	2	5330-01-124-2451	99517	A180-119MILP2573 2
157	3		11083	8J3813
157	4	5305-00-708-3823	11083	7B3028
157	5		11083	9J8225
157	6		11083	6J0428
157	7	4820-00-923-7042	11083	1J8497
157	8	5330-01-026-9557	11083	4J0524
157	9	5365-00-194-4472	11083	4J7533
157	10	5365-00-194-4472	11083	4J7533
157	11		11083	8J3665
157	12	5360-00-597-8351	11083	4F7115
157	13	5365-00-944-0863	11083	3J7473
157	14	5330-00-167-5173	81349	M83248-2-908
157	15	2530-01-062-5317	11083	9S4187
157	16	5340-00-405-7400	11083	3H2549

CROSS-REFERENCE INDEXES

FIGURE AND ITEM NUMBER INDEX

FIG.	ITEM	STOCK NUMBER	CAGEC	PART NUMBER
157	17		11081	B2886
157	18	5310-00-584-5272	96906	MS35338-48
157	19	5360-01-020-4457	11083	8J2635
157	20		11083	8J2634
157	21	5330-00-166-1098	81349	M83248/2-110
157	22	5330-00-921-0054	11083	4J528
157	23		11083	1P4579
157	24	5310-00-930-7013	11083	4B4280
157	25	5305-00-071-2069	96906	MS90728-113
157	26		11083	8J3664
157	27	5306-00-809-7134	11083	2B947
157	28		11083	8J3659
157	29	5330-00-429-3542	11083	2S4078
157	30	5330-01-106-0940	81349	M83248/2-227
157	31	3110-00-011-9935	11083	4B9782
157	32	5360-00-455-7142	11083	9H2367
157	33	5330-00-801-3354	25184	906-737-70
157	34		11083	9S6154
158	1		11083	8J3667
158	2		11083	9J9821
158	3		11083	8J3666
158	4	5365-00-194-4472	11083	4J7533
158	5	5365-00-194-4472	11083	4J7533
158	6	3110-00-011-9935	11083	4B9782
158	7	5330-00-801-3354	25184	906-737-70
158	8	5365-00-763-0120	11083	9S4185
158	9	5330-00-167-5173	81349	M83248-2-908
158	10	2540-01-069-0855	11083	8J0507
158	11		11083	7J8066
158	12	5330-00-165-1980	81349	M83248/2-905
158	13		11083	8J2636
158	14		11083	7M8538
158	15		11083	8M8211
158	16		11083	8J2388
158	17	5365-01-109-7081	11083	8B3115
158	18		11083	8J3660
158	19		11083	8J3662
158	20		11083	5S2389
158	21	5310-00-584-5272	96906	MS35338-48
158	22	5310-00-930-7013	11083	4B4280
158	23		11083	8J3661
158	24	5360-01-102-3253	11083	9J4071
159	1	5306-00-862-8901	11083	L1169
159	2	5310-00-007-9861	27315	2045V007
159	3	5310-00-045-5001	96906	MS35340&50
159	4		11083	5R3731
159	5		11083	1V7943
159	6		11083	1V7940
159	7	5306-00-424-0086	11083	7B3235
159	8	5310-00-431-7239	11083	2M849
159	9	5315-01-098-3925	11083	9K5639

CROSS-REFERENCE INDEXES

FIGURE AND ITEM NUMBER INDEX

FIG.	ITEM	STOCK NUMBER	CAGEC	PART NUMBER
159	10	5315-00-846-4297	96906	MS24665-752
159	11	5306-01-051-7598	20680	6028
159	12		11083	2V3145
159	13	5307-01-102-7426	11083	5P1778
159	14	5307-01-115-2619	84483	007-863
159	15	5307-01-135-7339	10180	101-015-502
160	1		85105	101-015-231
160	2		11083	5R4424
160	3	5365-01-122-2107	11083	4V4002
160	4	5310-00-999-8288	11083	9M6527
160	5	5306-01-105-1790	11083	3S3557
160	6	5340-01-120-9453	11083	4V3234
160	7	5305-01-108-0653	11083	4V301
160	8	5310-01-097-6720	11083	5P1076
160	9	5306-00-424-0086	11083	7B3235
160	10	5307-01-097-9521	11083	5P3479
161	1	5306-00-263-8978	11083	S1587
161	2	5310-01-097-6720	11083	5P1076
161	3		11083	4V4546
161	4	5306-01-053-8047	11083	6K1330
161	5	5310-01-070-6979	11083	9L8339
161	6	5365-01-097-6827	11083	3V7867
161	7		11083	4V4071
161	8	5310-01-058-8071	11083	2K4973
161	9	5315-01-102-8570	11083	3V1078
161	10	5306-00-285-1368	11083	L1143
161	11		96906	MS51117-1
161	12	4730-00-050-4203	96906	MS15001-1
161	13	5310-00-776-4909	19207	7764909
161	14	5310-00-050-3520	24617	2018582
161	15		96906	MS24665628
161	16		11083	5R4406
161	17		11083	5R4586
161	18		11083	5R4587
161	19		11083	2M5795
161	20	5315-00-839-2326	11083	3B4607
161	21	2590-00-410-1903	11083	9M3835
161	22		11083	9M3838
161	23	5310-00-432-4064	11083	9M1974
161	24	5306-00-226-4825	96906	MS90728-32
161	25		11083	7V1558
161	26	5310-00-768-0318	96906	MS51967-14
161	27	5310-01-095-1249	11083	7D1649
161	28		11083	7V1559
161	29	5306-00-874-4001	11083	6H1717
161	30	5365-01-102-8151	11083	5V6103
161	31	5306-00-874-4001	11083	6H1717
161	32	5305-00-068-7837	96906	MS90728-5
161	33		96906	MS-24665-628
162	1	5310-00-042-6376	24617	426376
162	2		83355	1-4INNVYLKWASH

CROSS-REFERENCE INDEXES

FIGURE AND ITEM NUMBER INDEX

FIG.	ITEM	STOCK NUMBER	CAGEC	PART NUMBER
162	3		11083	2V2734
162	4		11083	4V4665
162	5	5305-00-068-7837	96906	MS90728-5
162	6	5310-01-051-2360	11083	5P0537
162	7		11083	1V5257
162	8		11083	1V7205
162	9		11083	4V5172
162	10		11083	4V6574
162	11		11083	1V5251
162	12	5340-01-097-8125	78553	C33795-3816-4
162	13	5310-00-999-8288	11083	9M6527
162	14	5310-01-097-6720	11083	5P1076
162	15	5306-00-809-7134	11083	2B947
162	16		11083	2V7417
162	17	5306-00-260-4508	11083	0S1594
162	18		11083	1V9750
162	19	5365-01-097-6828	11083	9S9238
162	20	5305-00-071-2069	96906	MS90728-113
162	21		11083	1V5250
162	22	5310-01-098-0624	11083	5P8245
162	23	5306-00-263-8978	11083	S1587
162	24	5340-00-664-6881	70485	711
163	1		11083	5R4439
163	2		11083	5R4407
163	3	5306-00-261-1153	11083	S1615
163	4	5310-01-098-0634	78189	WD23875
163	5		11083	4V5144
163	6		11083	2V3716
163	7	5305-00-450-0419	11083	7M0320
163	8		11083	2V3639
163	9		11083	2V3715
163	10		11083	5P6120
163	11	5305-01-097-9388	11083	4S4465
163	12	5310-00-637-9575	11083	7F9223
163	13		11083	2V3804
163	14	5306-00-260-4508	11083	0S1594
163	15	5310-01-094-8810	11083	5P1075
163	16	5305-01-102-7341	11083	2S9556
163	17	5310-00-852-8266	11083	3B4502
163	18		11083	4B4274
163	19		11083	2V3799
163	20		11083	2V3822
163	21	5305-01-102-8453	11083	8L6521
163	22		11083	2V3801
163	23		11083	2V3709
163	24	5310-01-104-4874	11083	2V3708
163	25		11083	2V3714
163	26		23540	359-14
163	27		11083	5R4446
163	28	5305-01-102-7337	11083	3K6168
163	29	5340-00-291-0372	61864	SS51142

CROSS-REFERENCE INDEXES

FIGURE AND ITEM NUMBER INDEX

FIG.	ITEM	STOCK NUMBER	CAGEC	PART NUMBER
163	30		11083	2V3627
163	31	5340-00-188-0471	82402	6147822
163	32		11083	5R4475
163	33		23540	412-2
163	34	5340-00-900-3300	78553	C7956-1420-24
163	35	5310-01-058-8071	11083	2K4973
163	36	5305-00-068-7837	96906	MS90728-5
163	37		11083	1A3382
163	38	5330-01-097-9435	11083	2V9383
163	39		11083	3V2047
163	40	5305-00-071-2505	96906	MS90728-7
163	41	5330-01-097-9434	11083	2V9381
163	42	5330-01-097-9438	11083	2V9384
163	43	5330-01-098-9992	11083	2V9382
163	44	5340-00-229-9287	11083	0L1026
163	45		11083	5R4454
163	46		11083	5R4436
164	1	5305-00-068-7837	96906	MS90728-5
164	2		11083	4V4666
164	3	5310-00-809-4058	96906	MS27183-10
164	4		11083	1V6754
164	5	5340-01-164-6470	11083	1V7205
164	6	5306-00-426-5062	11083	4F4879
164	7	5310-00-407-9566	96906	MS35338-45
164	8	5340-00-426-4803	11083	8M2772
164	9	5325-00-400-8682	11083	2D2751
164	10		11083	4V6293
164	11	3120-01-112-9254	11083	3R8530
164	12	5305-00-426-2936	11083	S1625
164	13		11083	1V9494
164	14		11083	4S9191
164	15	5306-00-426-2966	11083	T318
164	16	5310-00-042-6376	24617	426376
164	17		83355	1-4INNVYLKWASH
164	18		11083	1V6755
164	19	5340-00-664-6881	70485	711
165	1	5310-01-097-6720	11083	5P1076
165	2	5306-00-263-8978	11083	S1587
165	3		11083	2V2734
165	4		11083	2V2739
165	5		11083	2V2746
165	6		11083	2V2743
165	7		11083	2V7973
165	8		11083	4V4086
165	9	5310-00-269-6340	11083	1K6870
165	10	5306-00-426-4171	11083	3B2968
165	11		11083	4V4047
165	12	5310-01-097-6720	11083	5P1076
165	13	5306-00-423-8117	11083	0S1595
166	1		11083	4V3672
166	2		11083	1K6932

CROSS-REFERENCE INDEXES

FIGURE AND ITEM NUMBER INDEX

FIG.	ITEM	STOCK NUMBER	CAGEC	PART NUMBER
166	3	5310-01-102-7963	11083	1D6306
166	4		11083	5R4415
166	5		11083	5R3711
166	6	5305-01-102-7951	11083	6J4081
166	7		11083	3V3261
166	8	5310-00-930-7454	11083	1B4333
166	9		11083	1K7627
166	10	5310-01-105-1865	11083	8M4664
166	11	5305-01-105-1805	11083	6M2001
166	12		11083	4V7302
166	13		11083	5R4416
167	1	5310-01-097-6720	11083	5P1076
167	2	5306-00-268-5798	11083	L1329
167	3	5306-00-426-3397	11083	1D4566
167	4		11083	4V8801
167	5		11083	4V3710
167	6	5306-00-172-6356	11083	5D353
167	7	5310-00-999-8288	11083	9M6527
167	8		11083	4V3713
167	9		11083	1V9770
167	10	5306-01-105-1790	11083	3S3557
167	11	5340-01-164-6470	11083	1V7205
167	12	5340-01-159-1023	11083	4V6604
167	13	5310-01-051-2360	11083	5P0537
167	14	5305-00-068-7837	96906	MS90728-5
167	15		11083	1V9773
167	16	5340-01-162-9915	11083	4V6605
167	17		11083	2V9292
167	18	5310-00-251-0088	15564	1377A
167	19	5310-00-209-1869	41226	4347
167	20	5310-01-102-9868	11083	7H1642
167	21	5340-01-097-8125	78553	C33795-3816-4
167	22		70485	711
167	23	5306-00-423-8117	11083	0S1595
167	24		11083	1V9772
167	25	5310-01-096-6395	78553	C33746-1213-4
167	26		11083	1V9771
167	27		11083	4V4084
167	28		11083	5V3845
167	29		11083	5V3839
167	30		11083	3V8092
167	31		11083	3V8091
167	32		11083	3V8142
167	33	5310-00-117-4788	11083	5M2894
167	34	5365-00-423-9981	11083	6B933
167	35		11083	3V0581
167	36		11083	5R4472
167	37		11083	2M5795
167	38	2590-00-410-1903	11083	9M3835
167	39	5315-00-839-2326	11083	3B4607
167	40	5340-00-527-1594	70485	IR6S3

CROSS-REFERENCE INDEXES

FIGURE AND ITEM NUMBER INDEX

FIG.	ITEM	STOCK NUMBER	CAGEC	PART NUMBER
167	41	5306-01-097-8930	11083	308538
167	42	5310-01-095-1249	11083	7D1649
167	43		11083	5V6447
167	44	5310-01-098-0625	11083	6N8863
167	45		11083	2V7511
167	46		11083	4V4085
167	47		11083	5V6446
167	48		11083	2V7512
167	49		11083	4V4459
167	50	5340-01-160-6907	11083	4V6608
167	51		11083	1V9465
167	52	5340-01-203-2587	11083	1V6755
167	53	5310-00-042-6376	24617	426376
167	54	5340-01-173-3861	11083	4V6607
167	55	5306-00-263-4038	11083	2A4639
167	56	5365-01-099-2939	11083	4V7208
167	57	5340-00-490-9869	11083	2S2109
167	58	5306-01-110-1130	11083	5K9107
167	59		11083	4V3714
167	60	5306-00-423-8194	11083	1A2029
167	61		11083	2V7730
167	62	5305-01-015-6841	11083	0S1591
167	63		11083	2V9675
168	1	5306-01-097-8931	11083	319253
168	2	5310-01-094-9906	11083	5P6652
168	3		11083	3V2197
168	4	5365-01-102-8152	11083	5B9175
168	5	5310-01-102-2477	11083	5P8248
168	6	5306-00-426-3402	11083	1D4608
168	7	4730-00-809-8818	11083	6B0689
168	8		02280	805287
168	9		11083	3K8660
168	10	5310-01-097-6720	11083	5P1076
168	11	5306-01-097-8930	11083	308538
168	12		11083	2V9268
168	13	5306-00-423-8117	11083	0S1595
168	14		11083	2V7152
168	15		11083	2V7534
168	16		11083	5P0765
168	17	4730-01-072-1366	10988	214-256
168	18	4730-00-318-7288	30327	KF12-08PS
168	19		11083	3B7271
168	20	4730-00-249-3917	11083	3B6496
168	21		11083	2V6708
168	22		11083	2V7729
168	23	5306-00-260-4508	11083	0S1594
168	24	5310-00-999-8288	11083	9M6527
168	25		11083	2V7595
168	26		11083	5V6019
168	27	5310-00-251-0088	15564	1377A
168	28	5305-01-015-6841	11083	0S1591

CROSS-REFERENCE INDEXES

FIGURE AND ITEM NUMBER INDEX

FIG.	ITEM	STOCK NUMBER	CAGEC	PART NUMBER
168	29		11083	7V0657
168	30		11083	2V7371
168	31		11083	2V7372
168	32	5306-00-426-3605	11083	2A1538
168	33	5310-00-584-7888	96906	MS35338-51
168	34		11083	2V6709
168	35	5305-01-026-9518	11083	0S1571
168	36	5365-01-063-0778	11083	6B7469
168	37	5306-00-263-8978	11083	S1587
168	38		11083	3V3787
168	39	5340-01-097-8125	78553	C33795-3816-4
169	1	5310-01-053-7312	11083	2H3786
169	2		11083	4V9796
169	3		11083	2V6715
169	4	5310-00-584-7889	96906	MS35338-53
169	5	5305-01-104-4845	11083	7B8364
169	6		11083	4V9795
169	7		11083	2A1531
169	8	2920-00-130-3783	11083	3R2371
169	9	5310-01-098-0624	11083	5P8245
169	10		11083	8B7101
169	11	5310-01-095-4631	11083	5P8247
169	12	5306-00-426-3209	11083	1B4367
169	13	5340-00-818-0498	76005	J-6210-4
169	14		11083	1V9093
169	15	2930-01-053-4539	11083	2P3696
169	16	5305-00-419-3410	11083	1D4588
169	17	5310-00-007-9861	27315	2045V007
169	18		11083	3V5851
169	19	5365-01-097-9642	11083	6K9800
169	20	5310-00-139-7030	11083	4D3704
169	21	5306-00-426-3150	11083	1A8537
169	22	5365-01-097-6829	11083	9F8885
169	23	5310-00-629-9613	19207	6299613
169	24	5306-00-455-0459	11083	9S1366
169	25		11083	3V5850
169	26		11083	2V9874
169	27	5310-00-117-4788	11083	5M2894
169	28	5306-00-263-7301	11083	0L1351
170	1		11083	1V4901
170	2		11083	1V7206
170	3		11083	1V7746
170	4	5306-00-263-7301	11083	0L1351
170	5	5310-01-094-8810	11083	5P1075
170	6		11083	2V2014
170	7	5306-00-261-1153	11083	S1615
170	8	5310-01-098-0634	78189	WD23875
170	9	5305-01-121-1667	11083	6J1551
170	10	5365-01-098-1173	11083	1V7749
170	11	5306-00-874-4001	11083	6H1717
170	12	5310-00-193-1076	11083	2S1654

CROSS-REFERENCE INDEXES

FIGURE AND ITEM NUMBER INDEX

FIG.	ITEM	STOCK NUMBER	CAGEC	PART NUMBER
170	13	5310-01-098-0624	11083	5P8245
170	14		11083	1V9491
170	15	5305-00-494-1906	11083	1D4642
170	16	5365-01-098-1174	11083	1V7750
170	17		11083	2V9350
170	18	5306-00-698-2150	11083	L2070
170	19		11083	1V9492
171	1	5310-00-407-9566	96906	MS35338-45
171	2	5306-00-260-4508	11083	S1594
171	3	5310-00-584-5272	96906	MS35338-48
171	4	5306-00-268-5798	11083	L1329
171	5	5365-01-129-0960	11083	1V7753
171	6		11083	2V3849
171	7	5310-00-768-0318	12603	61D8
171	8		11083	2V4044
171	9		11083	5P5902
171	10		11083	2V4043
171	11	5305-00-225-3843	96906	MS90728-8
171	12	5310-01-098-0634	78189	WD23875
171	13		11083	2V3850
171	14	5306-00-261-1153	11083	S1615
171	15	5305-01-026-9518	11083	0S1571
171	16	5306-00-424-0086	11083	7B3235
171	17	5340-00-900-3300	78553	C7956-1420-24
171	18	5365-01-128-4302	11083	1V7801
171	19		11083	2V3758
171	20		11083	5H4744
171	21		11083	2V5095
171	22		11083	4V3317
171	23		11083	4V3318
171	24		11083	2V3851
172	1		11083	3V4163
172	2	5940-01-188-0009	79550	11856
172	3	5935-01-097-7239	79550	17510
172	4	5940-01-101-2456	11083	5P1477
172	5	5940-00-143-4780	96906	MS25036-108
172	6		11083	8K8836
172	7		70281	1016468
172	8		70281	1016489
172	9	5305-01-098-3779	11083	2N3478
172	10	5310-00-596-7691	96906	MS35335-32
172	11		11083	360594
172	12	5940-00-143-4780	96906	MS25036-108
172	13	5940-00-481-9090	59730	B251G
172	14		11083	335786
172	15		79497	C-636
172	16		70281	1016469
172	17		70281	1016488
172	18		70281	1016460
172	19		70281	1016487
172	20		21340	590030

CROSS-REFERENCE INDEXES

FIGURE AND ITEM NUMBER INDEX

FIG.	ITEM	STOCK NUMBER	CAGEC	PART NUMBER
172	21		70281	1016462
172	22		70281	1017643
172	23	5306-00-260-4508	11083	0S1594
172	24		70281	1017559
172	25		70281	1016491
172	26	5310-00-251-0088	15564	1377A
172	27		11083	3V3083
172	28		11083	3V3078
172	29		11083	3V4164
172	30	5935-01-097-7239	79550	17510
172	31	6145-00-600-6052	81349	M22759/11-16-0
172	32	5940-00-143-4780	96906	MS25036-108
172	33	5305-01-109-0590	11083	4B1239
172	34		11083	4V4164
172	35	5310-01-047-0423	13499	310-0742-010
172	36	5310-00-934-9766	11083	4B2048
172	37		11083	5P7111
172	38		70281	1016747
172	39	5310-00-431-7237	11083	1D4718
172	40		70523	AVM31670
172	41		70281	1015819
172	42		70281	1015821
172	43		70281	1015807
172	44		11083	4V9640
172	45	5305-00-071-2069	96906	MS90728-113
172	46		70281	1015822
172	47		77551	294143
172	48		70281	1005L008
172	49		70281	1016507
172	50		70281	1026L003
172	51		70281	1016785
172	52		70281	1016463
172	53		70281	1016464
172	54		70281	1015823
172	55	5330-01-128-8991	11083	5P5768
172	56		70281	1000L066
172	57	5310-00-804-4806	23040	33797S36
172	58	5310-00-362-8168	11083	4B4277
172	59		11083	4V6570
172	60	5310-00-362-8168	11083	4B4277
172	61	5306-00-226-4825	96906	MS90728-32
172	62	5310-01-058-8071	11083	2K4973
172	63		11083	6P6566
172	64		11083	4V6569
172	65		11083	5V5294
172	66		76871	FH3320
172	67	5310-00-117-4788	11083	5M2894
172	68	5310-00-557-9414	11083	4J8265
172	69		11083	6P6567
172	70		11083	5V8962
172	71		70281	1016646

CROSS-REFERENCE INDEXES

FIGURE AND ITEM NUMBER INDEX

FIG.	ITEM	STOCK NUMBER	CAGEC	PART NUMBER
172	72		11083	4V6571
172	73	5310-00-407-9566	96906	MS35338-45
172	74	5306-00-260-4508	11083	0S1594
172	75		70281	1015817
172	76		70281	1016490
172	77		70281	1017557
172	78	9390-01-118-2586	77969	486
172	79		70281	1016486
172	80		11083	5P7139
173	1		28882	250058
173	2		28882	50201
173	3	2910-00-429-5195	11083	2F7306
173	4	9390-01-118-5082	28882	64203
173	5		28882	280042
173	6		11083	8B4338
173	7		28882	64047
173	8	5305-01-095-1239	11083	7K3434
173	9	5310-01-109-5388	28882	55016
173	10		28882	280065
173	11		11083	5P7849
173	12		28882	95052
173	13	5305-01-214-7569	11083	320683
173	14		28882	95056
173	15	5305-01-097-9389	11083	2N3475
173	16	5305-01-023-9672	74006	2251-205
173	17	5340-00-162-5243	28882	50168
173	18		28882	95051
173	19	2590-00-114-4151	28882	61001
174	1	5306-00-497-7419	80020	87750-25
174	2		70281	1016402
174	3		11083	7V1782
174	4		11083	695688
174	5		11083	5P6096
174	6		70281	1016411
174	7	5310-00-011-0634	11083	4B2047
174	8		70523	AVM29086
174	9	2540-01-302-2564	11083	2V9692
174	10		74842	HS2304B
174	11	5365-00-721-7680	79136	5133-25MD
174	12		70281	1016409
174	13		70281	1015808
174	14	5305-01-097-9391	11083	5P4691
174	15		70523	AVM29088
174	16		11083	5P6095
174	17		70281	1016393
174	18		11083	5P7111
174	19		70281	1015811
174	20		11083	2V6467
175	1		11083	1V4868
175	2		11083	4V6182
175	3	5306-00-809-7134	11083	2B947

CROSS-REFERENCE INDEXES

FIGURE AND ITEM NUMBER INDEX

FIG.	ITEM	STOCK NUMBER	CAGEC	PART NUMBER
175	4	5365-01-102-8153	11083	8B9294
175	5		11083	4V6183
176	1		11083	5V2993
176	1		11083	5V2994
176	2	5310-00-763-8921	96906	MS51967-23
176	3		11083	5B639
176	4	5310-01-102-2477	11083	5P8248
176	5	5305-00-115-9526	96906	MS18154-58
176	6	5310-00-999-8288	11083	9M6527
176	7		11083	2V2996
176	7		11083	2V2997
177	1		11083	2V2680
177	2		56854	EA-2328-000D
177	3	2540-01-163-7365	11083	3V8252
177	4	5306-01-161-5500	11083	5P8945
177	5	5310-01-119-1442	82465	19089
177	6	2540-01-159-2975	56854	SA2450
177	7	5340-01-173-3721	11083	4V7848
177	8	5305-01-115-0716	11083	3S5358
177	9	5310-01-113-1315	11083	3N4731
177	10	5340-01-165-5848	11083	4V7901
177	11		11083	5P7111
177	12		11083	4V8036
177	13	5310-01-113-4047	11083	3K6060
177	14		86809	620059
177	15		29944	1MM-47200
177	16	5315-00-839-5820	96906	MS24665-134
177	17	5310-01-094-8810	11083	5P1075
177	18	5306-01-105-1790	11083	3S3557
177	19	5306-00-496-2234	11083	T642
178	1	5310-01-097-9416	11083	3P9900
178	2	5310-01-058-8071	11083	2K4973
178	3	5305-00-071-2069	96906	MS90728-113
178	4	5310-01-113-0578	11083	4V8586
178	5	5340-01-159-4468	11083	4V8026
178	6	5306-00-158-0697	11083	5M3062
178	6	5306-00-158-0697	11083	5M3062
178	7		11083	4V7904
178	8	5310-01-114-3807	82458	TLNF-3816-S
178	8	5310-01-114-3807	82458	TLNF-3816-S
178	9	2540-01-159-2990	11083	4V8259
178	10	5340-01-114-0214	11083	4V8579
178	11	2540-01-158-7590	11083	4V7902
178	12	5310-01-160-2038	77122	PS250085-PG
178	13		11083	4V8025
178	14		11083	5P3841
178	15		77824	4244-0156-2
178	16		11083	4V7908
178	17	5305-00-900-4614	96906	MS24667-51
178	17	5305-00-900-4614	96906	MS24667-51
178	18	2540-01-160-1607	11083	4V8033

CROSS-REFERENCE INDEXES

FIGURE AND ITEM NUMBER INDEX

FIG.	ITEM	STOCK NUMBER	CAGEC	PART NUMBER
178	19	5310-01-114-0640	82458	LK-1213-S
178	20	5340-01-172-2629	11083	4V8029
178	21		11083	5V1493
178	22	5310-00-930-7013	11083	4B4280
178	23	5310-00-109-7638	15434	S658
178	24	5306-01-114-0960	11083	4V8034
178	25	4010-01-169-7162	11083	4V8032
178	26	5365-01-113-0924	11083	4V8605
178	27	5305-00-717-5460	96906	MS35307-359
178	28		11083	4V8587
178	29	9905-01-157-1024	11083	4V8035
178	30		11083	4V7883
178	31	2540-01-162-6406	11083	4V7865
178	32		11083	4V7878
178	33		11083	4V7879
178	34		11083	4V7880
178	35	2540-01-162-4162	11083	4V7896
178	36		11083	5V5232
178	37	5360-01-163-9446	11083	4V8256
178	38	5315-00-276-5160	11083	3L1473
178	39	5360-01-160-2412	11083	4V8031
178	40		56854	SA2461-000E
179	1		11083	5V4861
179	2	3040-01-159-0918	11083	5V5233
179	3	5360-01-113-0868	11083	4V7895
179	4	5310-01-187-6105	77122	PS500016-PG
179	5	3040-01-159-3593	11083	4V8265
179	6	5340-01-161-7575	11083	4V8555
179	7	5307-01-115-0811	11083	5V4855
179	8	5310-01-113-2283	82465	29NTE1213
179	9	3120-01-113-0639	11083	4V7884
179	10	3120-01-116-9203	11083	4V8577
179	11		11083	4V7886
179	12	3040-01-162-7517	11083	4V8606
179	13		11083	4V8560
179	14	5315-01-219-2487	11083	4V8576
179	15	2540-01-217-8134	11083	4V8591
179	16	5340-01-172-6320	11083	5V4846
179	17	2540-01-218-1868	11083	4V8583
179	18	5306-01-115-0703	11083	4V8556
179	19		76110	765
179	20	5310-01-130-4273	11083	6D47
179	21	2540-01-171-3356	11083	4V7849
179	22	5310-01-187-6105	77122	PS500016-PG
179	23	2540-01-165-8318	11083	4V7860
179	24	2540-01-166-1171	11083	4V7859
179	25	2540-01-165-6001	11083	4V7881
179	26	2540-01-165-6002	11083	4V7857
179	27	5360-01-163-9446	11083	4V8256
179	28	2540-01-165-6000	11083	4V7855
179	29		11083	4V7850

CROSS-REFERENCE INDEXES

FIGURE AND ITEM NUMBER INDEX

FIG.	ITEM	STOCK NUMBER	CAGEC	PART NUMBER
179	30		11083	4V7851
179	31	5305-01-113-2264	11083	4V7864
179	32		11083	4V7861
179	33		11083	4V7862
179	34	3110-00-144-8589	11083	8D4146
179	35		11083	4V8261
179	36		11083	4V8610
179	37		11083	254-160801-00
179	38	5340-01-160-5759	11083	4V8562
179	39	5315-01-113-4175	11083	3K8584
179	40	3040-01-157-4383	11083	4V8566
179	41	5310-01-113-1309	11083	4V8561
179	42	5306-00-702-6344	96906	MS35751-15
179	43	5340-01-161-4023	11083	4V8554
179	44	5310-00-849-7021	80205	NAS1408A4
179	45		11083	4V8557
179	46	2540-01-158-7560	11083	4V8609
179	47		64959	BA98203-116
179	48	2540-01-158-7559	11083	4V8565
179	49		11083	4V8270
179	50	5340-01-176-8124	11083	4V8257
179	51	2540-01-218-1869	11083	4V8580
179	52		11083	4V7885
179	53	5355-01-162-4050	11083	4V7872
179	54	5315-00-276-5160	11083	3L1473
179	55	5360-01-117-7673	11083	4V7890
179	56	2540-01-165-8181	11083	4V7891
179	57		11083	4V7889
179	58	3040-01-159-2981	11083	4V8264
180	1		11083	1V4891
180	2		11083	2V4305
180	3	5940-00-351-8077	11083	2L8074
180	4	5940-01-285-5146	79550	412026
180	5		11083	2V4306
180	6	5935-01-097-7240	79550	11722
180	7		44655	0200R
180	8	5940-01-285-5146	79550	412026
180	9		60703	87900-85
180	10		60703	88841-28
180	11	2540-01-095-0037	60703	87883-4
180	12		60703	89448
180	13	2540-01-112-0525	70412	18782
180	14		70412	13440
180	15		11083	9M5052
180	16		11083	3V8103
180	17	5310-01-102-7961	11083	7D5272
180	18	5310-00-445-4633	11083	9M1311
180	19	5330-00-843-7194	11083	2D6392
180	20		11083	2V2245
180	21		11083	2V2244
180	22	5307-01-097-8995	11083	5S8558

CROSS-REFERENCE INDEXES

FIGURE AND ITEM NUMBER INDEX

FIG.	ITEM	STOCK NUMBER	CAGEC	PART NUMBER
180	23		11083	4V3527
180	24	5365-00-650-7092	11083	28941
180	25	4720-01-146-5898	24161	4040
180	26	5325-01-105-1968	11083	8D482
180	27	5305-01-096-6938	66503	188668
180	28	5310-01-097-6612	11083	3B4503
180	29	5340-01-232-5398	60703	90128
180	30	5310-01-063-0686	11083	4B2041
180	31	5310-00-088-4075	80205	NAS1676-6
180	32	5305-01-021-1508	33525	1726-0608
181	1		99066	11694-20-M027WC
181	2		99066	WWC-24L620-S
181	3	5310-00-637-9575	11083	7F9223
181	4	5310-00-660-2649	96906	MS35690-424
181	5	2540-00-123-7226	24956	LE721125A-1
181	6	5310-01-062-7149	11083	4D7421
181	7	5940-01-188-0009	79550	11856
181	8	5340-01-085-8085	99066	BK721005
181	9	5310-01-062-9899	11083	1H3338
181	10	5305-01-062-7143	11083	4B1264
181	11	2540-00-940-0413	01843	LK721D14A
181	12	5365-01-074-3568	11083	4D7416
181	13	5340-00-119-2065	01843	SP7211
181	14	5305-01-063-5735	11083	8F1315
181	15	2540-01-062-7131	99066	CP721084
181	16	5310-00-255-4371	82484	C-1421-1
181	17	5310-01-063-5822	11083	9F5644
181	18	2540-01-062-7132	99066	NT721017
181	19	2540-01-062-7131	99066	CP721084
181	20	5310-01-043-6821	01843	NT721021
181	21	5310-01-063-2983	11083	4B1550
181	22	5330-00-548-6119	11083	9S8016
182	1		11083	5R4530
182	2	5310-01-098-0634	78189	WD23875
182	3	5306-00-263-8981	11083	6F7027
182	4		11083	5R4527
182	5		60703	87415-506TM
182	6	5310-01-102-7961	11083	7D5272
182	7		90412	18742
182	8	5310-00-445-4633	11083	9M1311
182	9		11083	2V2245
182	10	5330-00-843-7194	11083	2D6392
182	11		11083	2V2244
182	12	5307-01-097-8995	11083	5S8558
182	13		11083	9M5052
182	14		11083	3V8103
183	1		11083	5R4528
183	2		99066	WWC24L804-38
183	3	5310-00-637-9575	11083	7F9223
183	4	5310-00-660-2649	96906	MS35690-424
183	5	5310-01-062-7149	11083	4D7421

CROSS-REFERENCE INDEXES

FIGURE AND ITEM NUMBER INDEX

FIG.	ITEM	STOCK NUMBER	CAGEC	PART NUMBER
183	6		11083	6K5499
183	7	2590-01-098-9330	11083	7K4475
183	8		11083	5R4483
183	9	5310-01-062-9899	11083	1H3338
183	10	5306-00-983-0142	77445	414419
183	11	2540-00-940-0413	01843	LK721014A
183	12	5365-01-074-3568	11083	4D7416
183	13	2540-01-062-9902	11083	4D7411
183	14	5305-01-063-5735	11083	8F1315
183	15		99066	SH721203A
183	16	5310-00-445-4633	11083	9M1311
183	17		11083	1H3244
183	18	5306-01-062-7129	70412	50957
183	19	5330-00-548-6119	11083	9S8016
183	20	5310-01-063-2983	11083	4B1550
183	21	2540-01-062-7131	99066	CP721084
183	22	5310-01-043-6821	01843	NT721021
183	23	2540-01-062-7132	99066	NT721017
183	24	5310-01-063-5822	11083	9F5644
183	25	5310-00-255-4371	82484	C-1421-1
184	1	5306-00-260-4508	11083	0S1594
184	2		70082	7623
184	3	5310-00-117-4788	11083	5M2894
184	4	5310-00-851-2682	96906	MS35691-17
184	5		70082	5259
184	5		70082	5260
184	6	5306-00-423-8393	11083	1C2251
184	7		70082	5257
184	7		70082	5258
184	8	5305-01-015-6841	11083	0S1591
184	9		70082	5261
184	9		70082	5262
184	10	2540-01-184-2289	70082	2296
185	1	5306-00-426-5062	11083	4F4879
185	2	5310-01-266-2481	11083	4B4278
185	3	5999-00-363-6240	11083	2B2404
185	4	5340-01-103-0273	11083	3P9200
185	5	4730-00-900-3296	79470	48X4
185	6	4730-00-172-0028	96906	MS15003-4
185	7	4710-01-302-7741	11083	2V6240
185	8	4730-00-011-8537	11083	3B9391
185	9		11083	2V6241
185	10	4730-00-011-8537	11083	3B9391
185	11	5340-01-097-9213	30966	BDT-413
185	12	4730-00-196-2067	11083	3B7733
185	13	4730-00-307-6426	11083	5P3741
185	14	4730-00-050-4208	96906	MS15003-1
185	15		79470	131-01003
185	16	4730-00-277-6988	84147	L10993-2
185	17		11083	5P3422
185	18	4730-00-172-0034	96906	MS15003-6

CROSS-REFERENCE INDEXES

FIGURE AND ITEM NUMBER INDEX

FIG.	ITEM	STOCK NUMBER	CAGEC	PART NUMBER
185	19		11083	2V2637
185	20	4730-00-011-8537	11083	3B9391
185	21		11083	2V6239
185	22	4730-00-011-8537	11083	3B9391
185	23		11083	2V6238
185	24	4730-00-011-8537	11083	3B9391
186	1		11083	5V5926
186	2	5306-00-263-7301	11083	0L1351
186	3		11083	2V3987
186	4		11083	2V3989
186	5		11083	3K7928
186	6		11083	1V1123
186	7	4730-01-062-7150	66295	10H
186	8	4710-01-063-0673	11083	1P3956
186	9		11083	1V1122
186	10		11083	2V3581
186	11		11083	62325
186	12		11083	2V3582
186	13		11083	5J7306
186	14	4730-00-622-5756	30327	KF10-06PS
186	15	4820-00-026-8473	11083	8F8151
186	16	4730-00-277-9141	78640	32143
186	17		11083	2V9826
186	18	5330-01-097-6630	11083	2V7869
186	19	4730-00-958-1475	11083	8L6005
186	20	5340-01-064-7512	11083	6D1641
186	21	5305-00-688-2111	96906	MS90728-63
186	22	5365-00-423-9981	11083	6B933
186	23		30780	3/4X318PTR-S
186	24		11083	3B7289
186	25	4730-00-193-0871	11083	3B7255
186	26	5305-00-115-9526	96906	MS18154-58
187	1		12662	S854-016
187	2		11083	7N5329
187	3	6220-01-059-0911	11083	5D0019
187	4		11083	2V9827
187	5	5940-00-351-8077	11083	2L8074
187	6	6145-00-600-6052	81349	M22759/11-16-0
187	7	5935-01-097-7240	79550	11722
187	8	5310-00-809-4058	96906	MS27183-10
187	9		83355	1-4INNVYLKWASH
187	10	5306-00-261-1153	11083	S1615
187	11		11083	2V3631
187	12		11083	2V3629
187	13	5310-01-120-5540	11083	5M5693
187	14	5310-01-266-2481	11083	4B4278
187	15	5310-01-094-8810	11083	5P1075
187	16	5306-00-260-4508	11083	0S1594
187	17		71741	14-11
187	18	5310-01-066-0499	11083	6F0253
188	1		11083	2V9911

CROSS-REFERENCE INDEXES

FIGURE AND ITEM NUMBER INDEX

FIG.	ITEM	STOCK NUMBER	CAGEC	PART NUMBER
188	2		11083	8F6321
188	3		71741	9-12
188	4	5325-01-103-8016	11083	8F6324
188	5	5310-01-108-7525	11083	9M2307
188	6	5310-00-804-3919	72962	29M-82
188	7		71741	24-30B
188	8		71741	7-40
188	9		11083	7K1742
188	10		71741	5-10
188	11		71741	4-10
188	12	5310-00-804-4806	23040	33797S36
188	13	5310-00-407-9566	96906	MS35338-45
188	14	5310-01-266-2481	11083	4B4278
188	15		71741	15-35
188	16	5305-00-058-1082	96906	MS51861-34
189	1		11083	6P2016
189	2	5310-00-038-9417	75418	3058-00843-06
189	3	5305-00-068-7837	96906	MS90728-5
189	4		94364	100056-8
189	5		94364	2-17958
189	6	5305-01-097-9388	11083	4S4465
189	7	5310-00-809-4058	96906	MS27183-10
189	8	5310-00-042-6376	24617	426376
189	9		94364	2-17954
189	10		94364	2-18665
189	11	5340-00-835-6504	61864	SS-51156
189	12	2540-01-063-0805	11083	6P5285
189	13	5365-01-097-9643	94364	2-18232
189	14	5315-01-062-7137	11083	3H1118
189	15	5930-01-181-0054	11083	6P3236
189	16		11083	1P5304
189	17	5925-01-048-2643	11083	1N9770
189	18	5305-00-005-0896	11083	5M6668
189	19	2540-01-063-0802	11083	6P1316
190	1		94364	2-18053
190	2	5340-01-184-6537	11083	9G0931
190	3		94364	C-1-3589
190	4	5310-00-251-0088	15564	1377A
190	5	5310-00-407-9566	96906	MS35338-45
190	6	5310-00-576-5752	11083	8F1434
190	7	5305-01-121-1646	11083	2L5317
190	8		80254	STD1640
190	9		94364	2-17937
190	10		94364	2-1855
190	11	7690-01-180-0919	11083	5P6670
190	12	5305-00-115-9526	96906	MS18154-58
190	13	5325-01-102-8526	11083	8P5348
190	14	2920-01-059-0864	11083	1S724
190	15	5315-01-062-7137	11083	3H1118
190	16	5365-01-185-0624	94364	2-18231
190	17	5305-00-068-7837	96906	MS90728-5

CROSS-REFERENCE INDEXES

FIGURE AND ITEM NUMBER INDEX

FIG.	ITEM	STOCK NUMBER	CAGEC	PART NUMBER
190	18		94364	2-18233
190	19		11083	3B4504
190	20	5305-00-068-7837	96906	MS90728-5
190	21	2940-01-062-7140	11083	3P7993
191	1		94364	2-18611
191	2		11083	8P7067
191	3		83355	1-4INNVYLKWASH
191	4	5305-00-068-7837	96906	MS90728-5
191	5		11083	8P7401
191	6	5940-00-143-4775	96906	MS25036-156
191	7	5940-00-143-4774	96906	MS25036-153
191	8	5310-00-042-6376	24617	426376
191	9	5310-00-251-0088	15564	1377A
191	10	5310-00-407-9566	96906	MS35338-45
191	11	5330-01-062-7170	11083	6P1296
191	12		94364	2-18557
191	13	5935-01-062-7141	11083	3S8183
191	14	5340-00-702-8534	61864	SS-48165
191	15	5325-01-062-7172	11083	6P1301
191	16		94364	2-17927
191	17		11083	5P0878
191	18	2540-01-062-7171	11083	6P1298
191	19	2520-00-536-9675	11083	2H4499
191	20	5310-01-266-2481	11083	4B4278
191	21	5305-00-115-9526	96906	MS18154-58
192	1		94364	D-2-17928
192	2		94364	D-2-18490
192	3		94364	1-2827
192	4	5305-00-723-9382	96906	MS51963-68
192	5		11083	4B2049
192	6	5310-00-596-7691	96906	MS35335-32
192	7		94364	C-2-15807
192	8		83355	1-4INVVYLKWASH
192	9		11083	S1613
192	10		94364	2-17679
192	11		11083	4B4274
192	12	5305-01-102-8453	11083	8L6521
192	13		94364	D-2-18489
192	14		94364	1-3059
192	15	5305-00-723-9382	96906	MS51963-68
193	1		11083	8P1163
193	2	4130-01-063-C737	11083	2S5016
193	3		77060	2984646
193	4	5940-01-059-0885	77060	2973916
193	5	5935-01-062-7141	11083	3S8183
194	1		11083	8P4732
194	2	5330-01-062-7165	11083	6P1286
194	3	5305-00-115-9526	96906	MS18154-58
194	4	5310-00-407-9566	96906	MS35338-45
194	5	5330-01-062-7167	94364	2-17925
194	6		11083	8P5396

CROSS-REFERENCE INDEXES

FIGURE AND ITEM NUMBER INDEX

FIG.	ITEM	STOCK NUMBER	CAGEC	PART NUMBER
194	7	5360-01-097-9196	11083	1S1790
194	8		94364	2-19479
194	9	5330-01-110-1923	94364	B-2-19480
194	10	5330-01-062-7164	11083	6P1285
194	11		94364	2-17693
194	12	2540-01-063-0804	11083	6P1319
194	13		94364	2-17960
194	14		94364	2-17959
194	15	5305-01-053-4553	11083	310243
194	16	5330-01-062-7128	11083	1P6500
194	17	5310-01-266-2481	11083	4B4278
194	18	5310-00-557-9414	11083	4J8265
195	1		11083	5R4477
195	2		11671	49681
195	3		11671	25562
195	4		11671	24248
195	5	5330-01-112-6666	11671	25792
195	6		11671	25372
195	7		11671	24986
195	8		11671	24985
195	9	5330-01-168-5091	02697	2-256V709-90
195	10		11671	20-16KH3390
195	11		11671	49679
195	12		11671	13807
195	13	5310-01-113-1310	11671	12875
195	14	5310-01-118-1191	84247	HR12
195	15		11083	3G1797
195	16		11671	12989
195	17	4820-01-158-6861	11671	15587
195	18		11671	25297
195	19		11671	32719
195	20		11671	49680
195	21	5310-00-139-7030	11083	4D3704
195	22	5305-00-724-7221	96906	MS90728-163
195	23	5330-00-663-5709	11083	5F3106
195	24	4320-01-101-8685	11083	3G5873
196	1		11083	537664
196	2	3040-01-242-6414	11083	537665
196	3		82156	49NU3212
196	4		11083	688340
196	5	3930-00-964-8770	11083	659454
196	6		11083	670902
196	7	5330-00-122-9656	11083	6L1651
196	8		11083	537663
196	9		81168	7580-20881
196	10		53930	C-657971
196	11	5330-01-120-9944	11083	618146
196	12		11083	665947
196	13	5330-01-121-2763	11083	657978
196	14	5330-01-122-2466	11083	2D1692
196	15		27737	GZ2540

CROSS-REFERENCE INDEXES

FIGURE AND ITEM NUMBER INDEX

FIG.	ITEM	STOCK NUMBER	CAGEC	PART NUMBER
196	16	5365-01-095-8663	80756	RRT-393
196	17		11083	665808
196	18	4730-00-172-0034	95879	16138
196	19	5306-00-260-4508	11083	0S1594
196	20	5310-00-117-4788	11083	5M2894
196	21	5365-01-121-2073	11083	646059
196	22		11083	670407
196	23		11083	657833
196	24		11083	665736
197	1		11083	537765
197	2		11083	690478
197	3		11083	5P2298
197	4		11083	692306
197	5	4730-00-809-8818	11083	680689
197	6	5330-00-167-5174	81349	M83248/2-910
197	7		11083	537495
197	8		07742	4459-02
197	9		11083	691262
197	10		07742	238-06
197	11		11083	694531
197	12		11083	690256
197	13		07742	4459-18
197	14		11083	640109
197	15		11083	537557
197	16	5310-00-432-4064	11083	9M1974
197	17	5306-00-226-4827	96906	MS90728-34
197	18		11083	537494
197	19		07742	4458-18
197	20		11083	690256
197	21		11083	694531
197	22		11083	538397
197	23		11083	691262
197	24		07742	4458-02
197	25		11083	693256
197	26	5975-00-074-2072	96906	MS3367-1-9
198	1		11083	537637
198	2		11083	537636
199	1		11083	695940
199	2		11083	690321
199	3		11083	695939
199	4		11083	646370
199	5		11083	614809
199	6		11083	646371
199	7		30655	59-077-375-3500
199	8	4730-00-050-4208	96906	MS15003-1
199	9		11083	690320
199	10		11083	690644
199	11		11083	695257
199	12		11083	688293
199	13	3110-01-037-7207	11083	1P3935
199	14	3110-01-053-7564	11083	1P3934

CROSS-REFERENCE INDEXES

FIGURE AND ITEM NUMBER INDEX

FIG.	ITEM	STOCK NUMBER	CAGEC	PART NUMBER
199	15	5365-01-053-7324	11083	2P8386
199	16		84290	26028
199	17		84290	26024
199	18		11083	690658
199	19		11083	689478
199	20	5310-01-036-8730	72962	49-NE-242
199	21		99862	CL-10-SW
199	22		11083	664352
199	23		11083	3B4611
199	24		11083	664351
199	25		11083	S184
199	26	5310-01-236-9975	11083	3B4508
199	27	5310-00-251-0088	15564	1377A
199	28	5310-00-117-4788	11083	5M2894
199	29		10180	101-017-182
199	30		11083	695039
199	31		11083	688273
199	32	5365-01-095-8663	51814	WHT-393
199	33		27737	GZ2540
199	34		11083	537755
199	35		11083	537756
199	36	3120-01-084-4832	60380	35SF56
199	37		11083	537754
199	38		11083	537763
199	39	5306-01-119-1758	11083	7B8791
199	40	4730-00-010-9365	11083	3J7283
199	41		11083	696013
199	42		11083	696014
199	43		11083	657804
199	44		11083	663573
199	45	5365-00-634-7467	96906	MS16624-1437
199	46	5306-00-263-7304	11083	S1576
199	47	5310-01-095-4631	11083	5P8247
199	48		11083	646271
199	49		11083	614809
199	50		11083	646266
199	51		11083	646272
199	52		11083	673160
199	53		11083	457012
199	54		11083	673159
199	55		11083	657927
199	56	4730-00-172-0034	96906	MS15003-6
199	57		11083	664354
199	58	5310-01-102-2477	11083	5P8248
199	59	5306-00-426-5835	11083	7B5163
199	60	5306-00-423-8069	11083	0L1178
199	61		11083	657812
199	62		11083	657809
199	63		11083	657955
199	64		11083	657806
199	65		11083	646147

CROSS-REFERENCE INDEXES

FIGURE AND ITEM NUMBER INDEX

FIG.	ITEM	STOCK NUMBER	CAGEC	PART NUMBER
199	66	5365-00-820-5964	79136	5100-354
199	67		11083	617916
199	68		11083	673144
199	69	5305-01-102-1824	11083	531426
199	70	5365-01-247-6875	11083	673145
199	71	5306-00-261-3396	11083	S1897
200	1	3040-01-311-6861	11083	537741
200	2	5330-01-107-6747	11132	904977
200	3		11132	890353B
200	4		11132	261685
200	5	2590-01-105-2013	11132	860090
200	6	2590-01-104-4081	11132	897448
200	7	5330-00-081-9702	11083	1M9015
200	8		11132	240430
200	9	5330-01-107-6747	11132	904977
200	10	2590-01-104-4097	11132	860111
200	11		11132	252154
200	12	3020-01-295-3662	73433	BL-1288
200	13		11083	618820
200	14		11083	616685
200	15		11083	617994
200	16	4720-00-847-1710	01276	1525-4-22
200	17		11083	649918
200	18		11083	649917
200	19		91725	204
201	1		11083	537615
201	2		11083	537790
201	3	5306-00-426-3605	11083	2A1538
201	4	5310-01-102-2477	11083	5P8248
201	5		11083	537698
201	6	4730-00-172-0034	96906	MS15003-6
201	7		11083	537700
201	8	2520-01-066-9170	11083	3K2559
201	9		11083	5J6424
201	10		11083	537699
201	11		11083	537554
201	12		11083	537616
201	13	5306-00-245-0953	11083	1A458
201	14	4730-00-050-4208	96906	MS15003-1
201	15		11083	537564
201	16	5306-00-426-3404	11083	1D4610
201	17		11083	538336
201	18		11083	538337
201	19		11083	538338
201	20		11083	537668
201	21		11083	537703
201	22		11083	538257
201	23		11083	537704
201	24		11083	537606
201	25		11083	537631
201	26		11083	696059

CROSS-REFERENCE INDEXES

FIGURE AND ITEM NUMBER INDEX

FIG.	ITEM	STOCK NUMBER	CAGEC	PART NUMBER
201	27		11083	673146
201	28		11083	673147
201	29		11083	457012
201	30		11083	646272
201	31		11083	646271
201	32		11083	614809
201	33		11083	646266
201	34		11083	673148
201	35	5306-00-260-4502	11083	S1577
201	36	5310-00-045-5001	96906	MS35340650
201	37	4730-00-244-6517	95879	1684B
201	38	4730-00-924-7975	11083	3H0120
201	39		11083	657927
201	40		11083	5H5012
201	41		11083	696013
201	42		11083	696014
201	43		11083	657804
201	44		80756	RRN775
202	1	5306-00-426-3400	11083	104593
202	2		21335	010-11515
202	3		52555	536631
202	4		11083	685107
202	5	5310-01-061-4004	11083	2H3789
202	6	5307-01-011-3163	85105	101-017-186
202	7		11083	537156
202	8	5310-00-804-4806	23040	33797S36
202	9	5310-00-432-4064	11083	9M1974
202	10		11083	696456
202	11	5306-00-930-5643	11083	1A9579
202	12	5305-01-062-9897	11083	104599
202	13		11083	538129
202	14	4720-01-018-6551	81343	SAE100R7-6
202	15	4730-01-106-3973	85757	3903-06546
202	16	4730-01-286-0225	11083	2P1278
202	17		11083	680594
202	18		11083	680595
202	19		11083	680596
202	20		11083	680597
202	21	5310-00-251-0088	15564	1377A
202	22	5310-00-117-4788	11083	5M2894
202	23		11083	688358
202	24	5310-00-186-9550	11083	2P1279
202	25		11083	538128
202	26	4730-01-106-3973	85757	3903-06546
202	27	4720-01-018-6551	81343	SAE100R7-6
202	28		11083	678890
202	29		11083	538151
202	30		11083	674602
202	31		79550	998
202	32	9905-01-174-0961	11083	680592
202	33		11083	680593

CROSS-REFERENCE INDEXES

FIGURE AND ITEM NUMBER INDEX

FIG.	ITEM	STOCK NUMBER	CAGEC	PART NUMBER
202	34		73992	2-H-6
202	35	5330-01-032-3336	58312	7L6385-00
202	36		73992	2-K-6
202	37	4730-00-491-9576	96906	MS51525A6
202	38		11083	538127
202	39	4730-01-106-3973	85757	3903-06546
202	40	4720-01-018-6551	81343	SAE100R7-6
202	41	5306-00-637-4956	11083	0S1588
202	42	5306-00-063-5001	11083	1A2209
202	43	5340-01-102-7941	99953	338248
202	44		11083	538152
202	45	5310-00-725-7382	11083	1B4203
202	46		98343	753
202	47		11083	6S7251
202	48	5315-00-187-9549	96906	MS24665-418
202	49		85683	A-896
202	50		11083	5M3469
202	51	4730-01-062-7150	66295	10H
203	1		11083	5R4516
203	2		11083	8S3759
203	3	4720-01-051-6773	11083	9S247
203	3	4730-01-185-5347	11083	315744
203	4	5340-01-051-6767	11083	3S7166
203	5		11083	8S6389
203	6		11083	6B4174
203	7	5330-00-167-5174	81349	M83248/2-910
203	8		11083	5P9973
203	9		11083	5R4545
203	10		11083	8S3759
203	11	4720-01-051-6773	11083	9S247
203	12	5340-01-051-6767	11083	3S7166
203	13		11083	8S6389
203	14		11083	618827
203	15		53930	660542
203	16		11083	6K8420
203	17	5306-00-260-4508	11083	0S1594
203	18	5310-01-094-8810	11083	5P1075
203	19		11083	5R4515
203	20		11083	5P1836
203	21		11083	8M0744
203	22		11083	0B0145
203	23	5310-00-999-8285	11083	8M7145
203	24	5305-01-026-9518	11083	0S1571
203	25		11083	5R4513
203	26		11083	0B0145
203	27		11083	8M0744
203	28		11083	5P1836
203	29	5340-01-188-7748	11083	5K9660
203	30	3120-01-102-7939	11083	6H7127
203	31	5310-00-486-2505	15434	108330
203	32		30780	12-16F5XS

CROSS-REFERENCE INDEXES

FIGURE AND ITEM NUMBER INDEX

FIG.	ITEM	STOCK NUMBER	CAGEC	PART NUMBER
203	33	4730-00-133-3196	96906	MS51521A12
203	34	2590-00-930-9407	11083	7M8485
203	35		11083	5R4514
203	36		11083	8S3759
203	37	4720-01-051-6773	11083	9S247
203	38	5340-01-051-6767	11083	3S7166
203	39		11083	8S6389
204	1	4730-01-066-7651	11083	307935
204	2	2590-00-930-9407	11083	7M8485
204	3	4730-01-185-5347	11083	315744
204	4		11083	5R4517
204	4	5310-00-117-4788	11083	5M2894
204	5		11083	1P0044
204	6		11083	1P0043
204	7		11083	2P1285
204	8		11083	5R3816
204	9		11083	2P1286
204	10		11083	5R4532
204	11	4730-01-242-6344	11083	8S3918
204	12	3120-00-236-1319	11083	3S7252
204	13	5306-00-226-4838	96906	MS90728-45
204	14	5310-01-094-8810	11083	5P1075
204	15		91561	SM-900 ORB
204	16	4710-01-243-0093	11083	5R4557
204	17		11083	1P0044
204	18		11083	1P0043
204	19		11083	536222
204	20		11083	7J0728
204	21		11083	7J0729
204	22	5306-00-260-4508	11083	0S1594
204	23		75272	COV2515
204	24	531C-00-251-0088	15564	1377A
204	25		11083	5R4508
204	26	4730-01-242-6344	11083	8S3918
204	27	3120-00-236-1319	11083	3S7252
204	28		11083	8K5114
204	29	5340-01-287-6723	11083	7S0530
205	1		11083	5R4511
205	2	4720-01-051-7602	11083	3S8606
205	3	4730-01-051-7605	11083	8S4055
205	4	5330-00-167-5174	81349	M83248/2-910
205	5		11083	6A7454
205	6	4730-00-450-3480	11083	6K3607
205	7		75472	SA-L2
205	8	4720-01-051-6773	11083	9S247
205	9	4730-01-068-9756	11083	8S6391
205	10	4720-01-051-7602	11083	3S8606
205	11	4730-01-063-8263	11083	8M0547
205	12		11083	5R4512
205	13	4730-01-068-9756	11083	8S6391
205	14	4720-01-051-7602	11083	3S8606

CROSS-REFERENCE INDEXES

FIGURE AND ITEM NUMBER INDEX

FIG.	ITEM	STOCK NUMBER	CAGEC	PART NUMBER
205	15	4730-01-051-7605	11083	8S4055
205	16	4730-01-066-4586	11083	8M0505
205	17	5330-00-167-5173	81349	M83248-2-908
205	18		51814	WST-100
205	19		91561	7706-008
205	20	4730-00-080-7040	96906	MS51525A6-8
205	21		11083	5R4555
205	22	5310-01-097-6720	11083	5P1076
205	23	5306-00-426-2934	11083	0S1621
205	24		11083	5R4563
205	25		11083	5R4564
205	26		11083	5R4567
205	27		11083	5R4568
205	28		11083	5R4566
205	29		11083	5R4565
205	30	5306-00-263-8978	11083	S1587
205	31	5340-01-089-9350	75272	CDV-1617
205	32		11083	2V7901
205	33		11083	1K1122
205	34	5310-01-097-6720	11083	5P1076
205	35	5310-00-768-0318	96906	MS51967-14
206	1	5330-00-325-6310	11083	2H6338
206	2		11083	9K5567
206	3	5310-01-110-7920	11083	4J2677
206	4	5305-00-724-7221	96906	MS90728-163
206	5		11083	7D3493
206	5		11083	7D4593
206	6		11083	7D8368
206	7	5340-01-026-9553	11083	5P0598
206	8		11083	5R4486
206	9	5305-00-071-2069	96906	MS90728-113
206	10	5306-00-809-7134	11083	2B947
206	11	5306-00-263-8978	11083	S1587
206	12		11083	1P3707
206	13	5310-00-584-5272	96906	MS35338-48
206	14	5310-00-431-7239	11083	2M849
206	15	2590-00-930-9407	11083	7M8485
206	16	4730-01-066-7651	11083	3D7935
206	17		11083	5R4523
206	18	4730-01-242-6344	11083	8S3918
206	19	3120-00-236-1319	11083	3S7252
206	20		11083	2P1411
206	21		11083	4V5412
206	22	5310-01-102-3536	11083	3V3306
206	23	5306-00-426-2934	11083	0S1621
206	24		11083	3V7868
206	25	5340-01-102-4351	11083	2V6351
206	26	5340-01-102-3519	11083	2V6353
206	27	5310-00-768-0318	96906	MS51967-14
206	28	5330-01-124-2451	99517	A180-119MILP2573 2

CROSS-REFERENCE INDEXES

FIGURE AND ITEM NUMBER INDEX

FIG.	ITEM	STOCK NUMBER	CAGEC	PART NUMBER
206	29	4730-00-710-5571	96906	MS51525A12
206	30		11083	5R4519
206	31	4730-00-812-0924	11083	8M744
206	32		11083	8145
206	33		11083	5P3466
206	34		91561	V120-1214
206	35	5306-00-455-0460	11083	8S9092
206	36		11083	5R4518
206	37	5330-01-107-4646	11083	1P3708
206	38	5306-00-426-2922	11083	S1573
206	39	5306-00-424-0086	11083	7B3235
206	40	5330-00-593-1247	11083	5H8848
206	41		11083	1V9741
206	42	5306-00-874-4001	11083	6H1717
206	43	5310-00-930-7013	11083	4B4280
206	44		11083	1V9692
206	45	5340-01-102-4352	11083	2V6350
206	46	5340-01-102-1791	11083	2V6352
206	47	5306-00-423-8117	11083	0S1595
206	48	5305-00-071-2076	96906	MS90728-120
206	49	4730-01-156-9977	11083	318759
206	50		11083	5R3784
206	51	5330-00-235-5692	11083	4J0523
206	52	5310-01-098-0624	11083	5P8245
206	53		62983	307951
206	54		11083	5R4497
206	55	4730-01-202-9311	11083	2P0988
206	56	5365-01-067-1426	11083	3S7116
206	57		11083	5R4501
206	58	5340-01-051-6767	11083	3S7166
206	59		11083	8S6389
206	60		11083	3P1427
206	61	5330-00-429-3542	11083	2S4078
206	62	4730-00-804-5092	78640	307975
206	63		11083	5R4428
206	64	4730-01-184-4274	11083	5P1717
206	65	4720-00-491-3007	11083	9M5242
206	66		11083	1V3878
206	67		11083	1V3876
206	68		11083	2V6354
206	69	5330-00-141-5069	11083	2H3935
206	70	5365-00-804-2784	96906	MS16625-1200
206	71	5330-01-026-9557	11083	4J0524
206	72	5340-01-060-0309	11083	1P4579
206	73		11083	5R4469
206	74	4730-01-063-5692	11083	3S8568
206	75	5365-01-067-1426	11083	3S7116
206	76		11083	5S3778
207	1		52555	E9137
207	2	5310-00-044-3339	19207	443339
207	3		52555	6915-1

CROSS-REFERENCE INDEXES

FIGURE AND ITEM NUMBER INDEX

FIG.	ITEM	STOCK NUMBER	CAGEC	PART NUMBER
207	4	5306-00-263-8978	11083	S1587
207	5		52555	9412-1
207	6	5310-00-843-4593	11083	184430
207	7	5305-00-719-5238	96906	MS90727-115
207	8	5315-00-839-5822	96906	MS24665-353
207	9	5340-01-306-8616	65508	9413-1
207	10	5310-00-045-1079	24617	145036
207	11		52555	2441-10
207	12		52555	9414-1
207	13	5305-00-071-2506	96906	MS90728-3
207	14	3930-01-198-0862	65508	9305-1
207	15	5315-00-839-5822	96906	MS24665-353
207	16		65508	B2364-1
207	17	3040-01-245-9210	65508	B2365-1
207	18		11083	523380
207	19	5315-00-846-0126	96906	MS24665-628
207	20	5310-01-248-1272	65508	A9313-1
207	21		96906	MS20066-734
207	22	4730-00-050-4208	96906	MS15003-1
207	23	5310-00-079-6474	96906	MS21044-C10
207	24	5930-01-246-2911	65508	B2892-1
207	25	5360-01-248-1226	65508	B42214-1
207	26	5305-00-723-9383	96906	MS51963-67
207	27	3120-01-226-9564	65508	A9304-1
207	28	5340-01-251-1598	65508	B3133-1
207	29	5930-01-246-2481	65508	B3128-1
207	30		52555	B2913-1
207	31	5305-01-210-3844	96906	MS24667-32L
207	32		52555	C46806-1
207	33	5305-00-978-9378	96906	MS16997-58
207	34	5930-01-196-6835	65508	B6984-4
207	35		52555	6904-1
207	36		52555	2364-1
207	37		52555	2438-1
207	38	5306-00-426-3397	11083	104566
207	39		52555	9248-1
207	40		52555	9235-1
207	41	5310-00-655-6151	96906	MS35335-65
207	42	5306-00-273-6357	11083	1A1460
207	43	5340-01-304-5288	65508	9231-1
207	44	4010-01-202-6761	65508	9408-1
207	45		52555	A9410-1
207	46		52555	A9409-1
207	47		52555	A9411-1
207	48		52555	9425-1
207	49		52555	9140-1
207	50		52555	5920-1
207	51	5305-00-225-3843	96906	MS90728-8
207	52	5310-01-160-2034	11083	206235
207	53	5306-00-426-3080	11083	1A5822
207	54		52555	5361-1

CROSS-REFERENCE INDEXES

FIGURE AND ITEM NUMBER INDEX

FIG.	ITEM	STOCK NUMBER	CAGEC	PART NUMBER
207	55	5306-00-426-3397	11083	1D4566
207	56		52555	9123-1
207	57		52555	9126-1
207	58	7690-01-305-4875	65508	9125-1
207	59	7690-01-305-4868	65508	9124-1
207	60		11083	S1620
207	61	5330-01-062-7128	11083	1P6500
207	62		52555	9457-1
207	63		11083	1D4717
207	64	5975-01-198-9915	65508	D9289-1
207	65		52555	A9290-1
207	66		52555	A9291-1
207	67	5306-00-068-0513	96906	MS90727-6
207	68	5310-01-160-2034	11083	2D6235
207	69	5305-00-725-2317	66195	22524R1
207	70	5305-00-983-6655	96906	MS16998-32
207	71	5305-00-983-6652	96906	MS16998-29
207	72	5930-01-204-5836	65508	B6984-1
207	73		52555	2355-1
207	74	5315-00-732-0578	96906	MS20066-304
207	75	5306-00-809-7134	11083	2B947
207	76		52555	A93071-1
207	77	3040-01-243-1024	11083	A9307-2
208	1		65508	E9138
208	2	5975-01-198-9915	65508	D9289-1
208	3		52555	A9290-1
208	4		52555	A9291-1
208	5	5306-00-068-0513	96906	MS90727-6
208	6	5310-01-160-2034	11083	2D6235
208	7	5306-00-261-1153	11083	S1615
208	8	5310-01-160-2034	11083	2D6235
208	9	7690-01-305-4876	65508	A9457-1
208	10		52555	9564-1
208	11		52555	A9563-1
208	12	5306-01-106-8225	11083	1D4533
208	13		52555	A9563-2
208	14		52555	9351-1
208	15		52555	A9412-1
208	16	3040-01-306-6340	65508	C9346-1
208	17	5306-00-423-8117	11083	0S1595
208	18	5310-01-236-9975	11083	3B4508
208	19		65508	3619-1
208	20	9905-01-305-2463	65508	A5920-1
208	21		52555	B9123-1
208	22	7690-01-308-3935	65508	A9126-1
208	23		52555	A9125-1
208	24		52555	A9140-1
208	25		65508	9426-1
208	26	5306-00-404-1417	11083	9F7022
208	27	4010-01-248-7203	65508	B9408
208	28	5305-01-184-7693	96906	MS51964-136

CROSS-REFERENCE INDEXES

FIGURE AND ITEM NUMBER INDEX

FIG.	ITEM	STOCK NUMBER	CAGEC	PART NUMBER
208	29		52555	A9410-1
208	30		65508	A9411-1
208	31	5306-00-930-5643	11083	1A9579
208	32		11083	2R4821
208	33		11083	3B4504
208	34	5306-00-423-8313	11083	1B2713
208	35		52555	C9124-1
208	36		52555	9417-1
208	37	5315-01-167-3655	11083	3B4632
208	38	5315-01-252-0722	65508	B2364-2
208	39	5310-00-842-7616	96906	MS35692-105
208	40		52555	B9341-1
208	41	5315-00-849-9854	96906	MS24665-498
208	42		65508	A9419-1
208	43	4730-00-420-9017	95879	1452
208	44	2990-01-245-6701	65508	C3928-3
208	45	5315-00-732-1005	96906	MS20066-381
208	46		96906	MS90448-242
208	47		52555	B3779-1
208	48	5360-01-249-3611	52555	B3017-1
208	49	5310-01-248-7070	65508	A9419-1
208	50	3120-01-251-3492	65508	A9304-2
208	51	5305-00-809-9385	96906	MS51021-60
208	52	5340-01-251-1596	65508	B3777-3
208	53	5310-01-078-2992	96906	MS35333-135
208	54	5306-00-261-1153	11083	S1615
208	55	5315-00-839-5822	96906	MS24665-353
208	56		52555	A9413-1
208	57	5310-00-045-1079	24617	145036
208	58	3040-01-304-4600	65508	B2356-5
208	59	5340-01-305-2485	65508	C2510-1
208	60		65508	B2364-1
208	61	5310-00-044-3339	19207	443339
208	62	5306-00-426-3397	11083	1D4566
208	63	5930-01-196-6835	65508	B6984-4
208	64		52555	C9231-1
208	65	5306-00-273-6357	11083	1A1460
208	66	5306-00-260-4502	11083	S1577
208	67	5930-01-204-5836	65508	B6984-1
208	68		11083	MS3533-74
208	69	5305-01-023-9064	11083	8H3127
208	70	5305-00-719-5238	96906	MS90727-115
208	71	5310-00-843-4593	11083	1B4430
208	72	5306-00-268-5798	11083	L1329
208	73	5315-00-732-0578	96906	MS20066-304
208	74	5340-01-305-2484	65508	C2571-2
208	75		52555	2355-1
208	76	5306-00-263-8978	11083	S1587
208	77		11083	B7085-1
208	78		11083	A9307-1
209	1		65508	9139

CROSS-REFERENCE INDEXES

FIGURE AND ITEM NUMBER INDEX

FIG.	ITEM	STOCK NUMBER	CAGEC	PART NUMBER
209	1	3040-01-203-8620	16294	WFC-2006
209	2	5306-00-261-1153	11083	S1615
209	3		52555	9322-1
209	4		10083	2K4821
209	5	5306-01-106-8225	11083	104533
209	6		52555	A9564-1
209	7		52555	A9563-1
209	8		52555	A9563-2
209	9	7690-01-305-4876	65508	A9457-1
209	10		52555	A9412-1
209	11	3040-01-304-4508	65508	B2702-1
209	12	5306-00-263-8978	11083	S1587
209	13	5310-00-584-5272	80045	23MS35338-10
209	14		65508	3619-1
209	15	2590-01-199-3102	65508	9305-2
209	15	3930-01-198-0862	65508	9305-1
209	16		11083	3B4617
209	17		65508	B2364-1
209	18	5310-00-842-7616	96906	MS35692-105
209	19		11083	3B5328
209	20	3040-01-245-9210	65508	B2365-1
209	21	5310-01-248-1272	65508	A9313-1
209	22	5315-00-849-7237	96906	MS20066-379
209	23	4730-00-050-4208	96906	MS15003-1
209	24	5310-00-079-6474	96906	MS21044-C10
209	25	5930-01-246-2911	65508	B2892-1
209	26	5360-01-248-1226	65508	B42214-1
209	27	3120-01-226-9564	65508	A9304-1
209	28	5305-01-184-7693	96906	MS51964-136
209	29	5340-01-251-1598	65508	B3133-1
209	30	5305-01-210-3844	96906	MS24667-32L
209	31		52555	B2913-1
209	32	5930-01-246-2481	65508	B3128-1
209	33		52555	C46806-1
209	34	5306-00-469-3767	11083	8H3128
209	35		52555	B6984-4
209	36		52555	A9413-1
209	37	5310-00-045-1079	24617	145036
209	38	5310-00-044-3339	19207	443339
209	39		52555	2364-1
209	40	5306-00-426-3397	11083	104566
209	41	5340-01-305-2485	65508	C2510-1
209	42	5315-00-839-5822	96906	MS24665-353
209	43	5315-01-249-1051	65508	2356-1
209	44	5306-00-404-1417	11083	9F7022
209	45	3040-01-243-1024	11083	A9307-2
209	46		65508	5920-1
209	47		52555	B9123-1
209	48	7690-01-308-3935	65508	A9126-1
209	49		52555	A9125-1
209	50		52555	A9140-1

CROSS-REFERENCE INDEXES

FIGURE AND ITEM NUMBER INDEX

FIG.	ITEM	STOCK NUMBER	CAGEC	PART NUMBER
209	51		52555	C9426-1
209	52	4010-01-202-6761	65508	9408-1
209	53		65508	A9409-1
209	54		52555	A9410-1
209	55		52555	A9411-1
209	56	5310-00-209-1869	41226	4347
209	57	5306-00-253-3376	11083	2A5546
209	58		11083	2K4821
209	59	5306-00-930-5643	11083	1A9579
209	60		52555	C9124-1
209	61	5306-00-273-6357	11083	1A1460
209	62		52555	C9231
209	63	5340-01-305-2484	65508	C2571-2
209	64		11083	OL1329
209	65	5310-00-843-4593	11083	1B4430
209	66		52555	2355-1
209	67	5315-00-732-0578	96906	MS20066-304
209	68	5305-00-719-5238	96906	MS90727-115
209	68	5306-00-268-5798	11083	L1329
209	69	5930-01-204-5836	65508	B6984-1
209	70	5306-00-261-1153	11083	S1615
209	71	5306-00-260-4502	11083	S1577
209	72	5306-00-423-8117	11083	0S1595
209	73	5975-01-198-9915	65508	D9289-1
209	74		52555	A9290-1
209	75		52555	A9291-1
209	76	5306-00-068-0513	96906	MS90727-6
209	77	5310-01-160-2034	11083	2D6235
209	78	3040-01-243-1024	65508	A9307-2
210	1		52555	D98151
210	1		52555	8675-1
210	2	5340-01-249-1169	65508	A8293-1
210	3	5340-01-249-1707	65508	A8287-1
210	4	5310-00-209-0786	96906	MS35335-33
210	5	5305-00-071-2508	96906	MS90728-1
210	6		52555	A8288-1
210	7	5360-01-306-9979	65508	A9296-1
210	8		52555	D8674
210	8	3040-01-245-9214	65508	D10269-1
210	9		52555	A8306-1
210	10	5315-00-080-1541	96906	MS16562-279
210	11	5340-01-248-1219	65508	B8290-1
210	12		52555	A8306-1
210	12	3040-01-245-3742	65508	A8291-1
210	13	5310-00-763-8927	96906	MS51971-10
210	14	5310-00-891-3427	96906	MS35691-74
211	1		66508	9815
211	2	5340-01-249-1169	65508	A8293-1
211	3	5340-01-249-1707	65508	A8287-1
211	4	5310-00-209-0786	96906	MS35335-33
211	5	5305-00-071-2508	96906	MS90728-1

CROSS-REFERENCE INDEXES

FIGURE AND ITEM NUMBER INDEX

FIG.	ITEM	STOCK NUMBER	CAGEC	PART NUMBER
211	6		52555	A8288-1
211	7	5360-01-306-9979	65508	A9296-1
211	8		52555	10269-1
211	9		52555	A9814-1
211	10	5315-00-080-1541	96906	MS16562-279
211	11	5340-01-248-1219	65508	B8290-1
211	12		52555	A8306-1
211	13	3040-01-245-3742	65508	A8291-1
211	14	5310-00-763-8927	96906	MS51971-10
211	15	5310-00-891-3427	96906	MS35691-74
212	1	3930-01-245-3724	65508	A9381-1
212	2	5340-01-249-1169	65508	A8293-1
212	3	5340-01-249-1707	65508	A8287-1
212	4	5310-00-209-0786	96906	MS35335-33
212	5	5305-00-071-2508	96906	MS90728-1
212	6		52555	A8288-1
212	7	5360-01-306-9979	65508	A9296-1
212	8	2510-01-245-6702	65508	D8307-1
212	9		52555	A8306-1
212	10	5315-00-080-1541	96906	MS16562-279
212	11	5340-01-248-1219	65508	B8290-1
212	12	3040-01-245-3742	65508	A8291-1
212	13	5310-00-763-8927	96906	MS51971-10
212	14	5310-00-891-3427	96906	MS35691-74
213	1	4730-01-199-7804	65508	A9377-1
213	2	5340-01-205-5773	65508	A9378-1
213	3		52555	A9385-1
213	4		52555	A9308-1
213	5	4730-01-199-4269	65508	A9379-1
213	6		52555	A9380-1
213	7		52555	B9399-1
213	8	4730-00-273-6686	96906	MS51504A8-8
213	9	4720-01-304-4497	65508	B9399-2
213	10	4730-01-248-5154	52555	A9387-1
214	1	4730-01-199-7804	65508	A9377-1
214	2	5340-01-205-5773	65508	A9378-1
214	3		30708	8-3-8F5-GSS
214	3		52555	A9385-1
214	4		52555	A9378-1
214	5		52555	A9380-1
214	6	4730-01-199-4269	65508	A9379-1
214	7		30780	8WGBTX-S
214	8	5310-01-229-1969	65508	A9386-1
214	9	4730-00-314-7754	79470	C5165X8
214	10		11083	5P191
214	11		52555	A9389-1
214	12	4720-01-246-5988	65508	B9382-1
214	13		52555	A9384-1
214	14	4720-01-245-6604	65508	B9382-2
214	15	4730-00-797-6566	98441	8JBTXS

CROSS-REFERENCE INDEXES

FIGURE AND ITEM NUMBER INDEX

FIG.	ITEM	STOCK NUMBER	CAGEC	PART NUMBER
215	1	3930-01-245-3724	65508	A9381-1
215	1	4730-01-199-7804	65508	A9377-1
215	2	5340-01-205-5773	65508	A9378-1
215	3		52555	A9385-1
215	4		52555	A9308-1
215	5		52555	A9380-1
215	6	4730-01-199-4269	65508	A9379-1
215	7	4730-01-248-5154	52555	A9387-1
215	8	5310-01-229-1969	65508	A9386-1
215	9		52555	A9390-1
215	10		11083	5P191
215	11		52555	A9389-1
215	12	4720-01-246-5988	65508	B9382-1
215	13	4730-00-273-6686	81343	8-8 070202CA(CAD)
215	14	4720-01-245-6604	65508	B9382-2
215	15		52555	A9388-1
216	2		11083	WF20-2A-60
216	3		16294	10307
216	4		16294	WM20-51
216	5		16294	10815-114
216	6		16294	10824-326
216	7		16294	10815-326
216	8		11083	WF20-4-60
216	9		16294	10815-224
216	10		16294	10822-214
216	11		16294	10815-214
216	12		16294	10822-214
216	13		11083	WM20-3
216	14		11083	10309
216	15		16294	10270
216	16		11083	WM25-9
216	17		16294	10223
216	18		16294	10500
217	1		11083	5R4346
217	2	5306-00-138-4466	11083	2H3855
217	3	5310-01-098-0624	11083	5P8245
217	4		11083	5R4348
217	5	5305-00-688-2111	96906	MS90728-63
217	6		11083	1P7009
217	7	5310-00-117-4788	11083	5M2894
217	8	5306-00-637-4956	11083	0S1588
217	9	5306-00-260-4513	11083	T320
217	10	5310-01-097-8955	11083	5P8244
217	11	5306-00-455-0459	11083	9S1366
217	12	5310-00-768-0318	12603	61D8
217	13	5340-00-426-4656	11083	4D7794
217	14	5310-00-251-0088	15564	1377A
217	15		11083	S509
217	16		11083	3R5883
217	17		24617	73342

CROSS-REFERENCE INDEXES

FIGURE AND ITEM NUMBER INDEX

FIG.	ITEM	STOCK NUMBER	CAGEC	PART NUMBER
217	18	5306-00-698-2150	11083	L2070
218	1		11083	5R4505
218	2		11083	5R4506
218	2		11083	5R4506
218	3		62983	242092
218	4		62983	1458
218	5		62983	313921
218	6	5365-00-839-1520	62983	313868
218	7	5330-00-892-2503	03956	1877528
218	8	5360-00-833-3648	62983	238834
218	9	4820-00-470-9869	62983	319701
218	10		62983	7074
218	11	5365-00-839-1481	62983	319962
218	12		62983	194843
218	13	5365-00-833-3649	62983	307197
218	14	5330-00-833-3651	62983	226163
218	15	5330-00-833-3650	62983	226157
218	16		62983	313844
218	17	5330-00-599-6573	62983	154018
218	18	5330-00-833-3652	62983	242076
218	19		62983	252615
218	20		62983	206086
218	21	5360-00-918-3760	62983	206772
218	22	3120-00-839-1480	62983	242079
218	23	5305-00-118-6470	62983	1050
218	24	5310-01-014-5495	62983	252523
218	25		62983	237824
218	26	5975-01-012-3538	62983	252509
218	27		62983	235415
218	28	5360-00-478-9867	62983	238085
218	29	4730-01-069-4045	62983	235416
218	30	5305-01-045-2775	62983	1250
218	31	4730-00-555-8291	10001	12Z329PC93
218	31	4730-00-701-9364	62983	7078
218	32		11083	694448
219	1		11083	5R4507
219	1		11083	5R457
219	2		62983	283785
219	3	5310-00-732-0558	62983	1454
219	4	5307-00-548-7261	62983	223153
219	5		62983	283785
219	6	3110-00-899-4353	62983	1656
219	7	5360-00-953-5205	62983	223388
219	8		96906	MS28775-111
219	9		62983	271722
219	10	2530-00-087-0327	62983	222640
219	11		62983	223898
219	12	4820-00-471-0026	62983	235415
219	13	5360-00-953-5209	62983	235145
219	14	4730-01-069-4045	62983	235416
219	15		62983	223897

CROSS-REFERENCE INDEXES

FIGURE AND ITEM NUMBER INDEX

FIG.	ITEM	STOCK NUMBER	CAGEC	PART NUMBER
219	16		62983	307198
219	17		62983	237736
219	18		62983	223489
219	19		62983	223493
219	20		62983	226161
219	21		62983	283856
219	22		62983	286669
219	23		62983	283782
219	24		62983	307951
219	25	5305-00-471-3909	62983	282027
219	26	5340-00-889-5209	62983	284154
219	27	2530-00-087-0369	62983	284155
219	28		62983	187000
219	29		62983	680702
219	30	5360-00-960-9326	62983	246632
219	31	5310-00-867-1465	62983	284156
219	32		62983	283781
219	33		62983	254968
219	34		96906	MS28775-111
219	35		62983	271722
219	36	5330-00-551-0471	62983	154012
219	37	5365-00-674-6831	62983	186580
219	38		62983	154129
219	38	5330-00-948-6482	62983	154129
219	39	5360-00-918-1920	62983	259871
219	40	4820-01-132-0582	62983	233019
220	1	5306-00-426-3150	11083	1A8537
220	2		11083	1V2951
220	3	5306-00-455-0460	11083	8S9092
220	4	5306-00-275-5012	11083	S1566
220	5	5310-00-139-7030	11083	4D3704
220	6	5310-01-113-1308	11083	5S581
220	7		11083	2V6782
220	8		11083	1V2708
220	9	5305-00-724-7222	96906	MS90728-164
220	10	5310-00-007-9861	27315	2045V007
220	11	5365-01-097-9642	11083	6K9800
221	1	4330-01-199-3109	11083	3G7232
221	2	5365-00-924-7128	11083	2J2864
221	3	5330-00-580-1215	11083	6F5559
221	4	4330-01-199-6770	11083	9J7195
221	5	3110-00-011-9935	11083	4B9782
221	6	5360-01-062-6135	11083	7J2983
221	7	5305-01-102-1826	11083	3S0106
221	8	2530-01-062-7177	11083	7J2994
221	9	5360-01-202-2099	11083	3G3273
221	10	4330-01-200-0867	11083	8J1856
221	11	2530-01-062-7179	11083	7J2999
221	12	2530-01-062-7175	11083	7J2987
221	13	5315-00-586-5103	11083	6H3556
221	14	2530-01-062-6137	11083	7J2988

CROSS-REFERENCE INDEXES

FIGURE AND ITEM NUMBER INDEX

FIG.	ITEM	STOCK NUMBER	CAGEC	PART NUMBER
221	15	5305-01-062-7176	11083	7J2989
221	16	5365-00-804-2784	96906	MS16625-1200
221	17	5305-00-724-7222	96906	MS90728-164
221	18	5365-00-476-4985	11083	9S8010
221	19	5330-00-429-3542	11083	2S4078
221	20	2590-00-101-1685	11083	4J3754
221	21	3110-00-011-9935	11083	4B9782
221	22	5340-01-026-9527	11083	4J3816
221	23	5330-00-962-4510	11083	4J3815
221	24	5365-00-950-8280	11083	7B2805
221	25	2520-00-920-2040	11083	3D6678
221	26	5330-01-102-8391	11083	5P3092
221	27		11083	9J4716
221	28	4330-01-061-0246	11083	7J670
221	29	4730-01-199-4857	11083	9J4066
221	30	5340-01-202-9165	11083	9J9316
221	31		98625	MV86144-T-C-2757
221	32	5330-01-102-3522	11083	5P3228
221	33		11083	9J4717
221	34		11083	2V9095
221	35		11083	3B747
221	36	4730-01-254-8683	11083	3B7275
221	37	2910-01-154-6878	11083	1V2751
221	38	5930-01-102-8836	11083	4V6205
221	39		71870	33520
221	40		11083	4M5317
221	41		79550	12167
221	42	5330-00-913-8117	11083	9H8890
221	43	5340-01-156-5479	11083	1V9373
221	44	5310-01-266-2481	11083	4B4278
221	45	5305-00-115-9526	96906	MS18154-58
221	46	5325-01-102-3577	11083	7K6416
221	47	5306-00-260-4508	11083	0S1594
221	48	5310-00-407-9566	96906	MS35338-45
221	49		11083	2V7343
221	50	5306-00-263-8978	11083	S1587
221	51	5310-00-584-5272	96906	MS35338-48
221	52	5330-00-580-1226	11083	1H9696
221	53		11083	9J8243
221	54		11083	3G5985
221	55	9340-01-062-6129	11083	6J1081
221	56	5325-01-062-6128	11083	6J1080
221	57	5306-00-637-4956	11083	0S1588
221	58	5330-00-580-1227	11083	5H6005
221	59	4730-00-882-8621	32537	4CB2
221	60	4730-00-203-2866	19207	10951182
221	61		11083	5P0750
221	62	4720-00-604-6497	84561	4-035-250
221	63		11083	9J4120
221	64	5330-00-141-5069	11083	2H3935
221	65		11083	9J4989

CROSS-REFERENCE INDEXES

FIGURE AND ITEM NUMBER INDEX

FIG.	ITEM	STOCK NUMBER	CAGEC	PART NUMBER
221	66	5306-00-423-8194	11083	1A2029
221	67	5330-00-431-7364	11083	6L5567
221	68	5330-00-367-5653	11083	3P651
221	69		11083	9J4711
221	70	5330-01-060-0737	11083	2D6533
221	71		11083	9J4699
221	72		11083	8J8781
221	73	5360-00-597-8341	11083	783039
221	74	5330-00-948-9768	11083	8M4436
221	75	4730-01-164-7821	11083	8J8782
221	76	5330-00-855-8047	11083	5M2057
221	77	4730-01-165-9540	11083	9J7031
221	78		11083	8J8783
221	79	5310-00-557-9414	11083	4J8265
221	80		11083	9J4722
221	81	5305-00-071-2069	96906	MS90728-113
221	82	5330-00-325-6310	11083	2H6338
221	83		11083	9J4128
221	84	5330-01-159-1075	11083	9S2084
221	85		11083	7S4150
221	86		11083	8J5796
221	87	5310-00-431-7239	11083	2M849
221	88	5330-00-555-3607	11083	1H8720
222	1	5315-00-839-5822	96906	MS24665-353
222	2	5310-00-930-7013	11083	4B4280
222	3		11083	683235
222	4	5315-00-891-0815	11083	3H1977
222	5		11083	5R4388
222	6		77313	344970
222	7		77313	344969
222	8		11083	5R4389
222	9	5310-01-053-2717	11083	9D4513
222	10		11083	1K4649
222	11		11083	1B8074
222	12		11083	1V8223
222	13	5310-00-423-8288	11083	1A8285
222	14	2590-01-199-6746	06970	173-MTT-2-56
222	15	2590-01-298-2313	06970	173L-TT1-54
222	16	5310-00-297-8836	72915	120613
222	17	5315-00-187-9538	24617	137946
222	18	5310-01-063-3001	11083	5M1822
222	19	5340-01-157-5981	11083	5P6438
222	20	5315-01-069-0765	11083	3K5601
222	21		77313	377388
222	22		77313	344971
222	23		77313	344972
222	24	5310-01-108-7539	11083	8M5346
222	25		11083	5R4401
222	26	5310-01-122-9066	11083	T-251
222	27		11083	5R4357
222	28		11083	5R4400

CROSS-REFERENCE INDEXES

FIGURE AND ITEM NUMBER INDEX

FIG.	ITEM	STOCK NUMBER	CAGEC	PART NUMBER
222	29	5305-00-082-1749	11083	2H3903
222	30		11083	5R4405
222	31	5330-01-104-4565	11083	5R4372
222	32	2920-00-423-8362	11083	1B7904
222	33		11083	5R4368
222	34	5310-01-062-9899	11083	1H3338
222	35	5310-00-042-6376	24617	426376
222	36	5306-00-263-7301	11083	0L1351
222	37	5310-00-407-9566	96906	MS35338-45
222	38	5310-01-266-2481	11083	4B4278
222	39		11083	5R4377
223	1		11083	9S9082
223	2		11083	5P6229
223	3		11083	5P0144
223	4	5120-00-861-4014	58312	8S4613-00
223	5	5120-00-178-1267	58312	8S2244-00
223	6		11083	5P7314
223	7		11083	5P7312
223	8		11083	5P9697
223	9		11083	5P6218
223	10		11083	5P6217
223	11		11083	5P7433
223	12		11083	5P6599
223	13		11083	5P2405
223	14		11083	5P2408
223	15		11083	5P2685
223	16		11083	5P2400
223	17		11083	5P6601
223	18		11083	5P2395

By Order of the Secretary of the Army:

CARL E. VUONO
General, United States Army
Chief of Staff

Official:

THOMAS F. SIKORA
Brigadier General, United States Army
The Adjutant General

Distribution:

To be distributed in accordance with DA Form 12-25-E (Block 5595) Unit and Direct Support and General Support maintenance requirements for TM10-3930-641-24P.

☆U.S. GOVERNMENT PRINTING OFFICE: 1990 543-016/40024

RECOMMENDED CHANGES TO EQUIPMENT TECHNICAL PUBLICATIONS

SOMETHING WRONG WITH THIS PUBLICATION?

FROM: (PRINT YOUR UNIT'S COMPLETE ADDRESS)
Your mailing address

DATE SENT
Date you fill out this form

PUBLICATION NUMBER	PUBLICATION DATE	PUBLICATION TITLE
TM X-XXXX-XXX-XX	Date of TM	Title of TM

PAGE NO	PARA-GRAPH	FIGURE NO	TABLE NO	IN THIS SPACE TELL WHAT IS WRONG AND WHAT SHOULD BE DONE ABOUT IT:
3		2		Item 10. Change illustration. Reason: Tube end shown assembled on wrong side of lever cam.
109		51		Item 3. The NSN and P/N are not listed on the AMDF nor the MCRL. Request correct NSN and P/N be furnished.
2-8			2-1	Preventive Maintenance Checks and Services. Item 7 under "Items to be inspected" should be changed to read as follows: Firing linkage and firing mechanism pawl.
12	1-6a			Since there are both 20- and 30- round magazines for this rifle, data on both should be listed.

(BE EXACT ... PIN-POINT WHERE IT IS)

SAMPLE

PRINTED NAME, GRADE OR TITLE, AND TELEPHONE NUMBER	SIGN HERE

DA FORM 1 JUL 79 2028-2 PREVIOUS EDITIONS ARE OBSOLETE.

P.S.--IF YOUR OUTFIT WANTS TO KNOW ABOUT YOUR RECOMMENDATION MAKE A CARBON COPY OF THIS AND GIVE IT TO YOUR HEADQUARTERS

TEAR ALONG PERFORATED LINE

FILL IN YOUR UNIT'S ADDRESS

FOLD BACK

DEPARTMENT OF THE ARMY

OFFICIAL BUSINESS

SAMPLE

Commander
US Army Tank-Automotive Command
ATTN: AMSTA-MB
Warren, Michigan 48397-5000

RECOMMENDED CHANGES TO EQUIPMENT TECHNICAL PUBLICATIONS

SOMETHING WRONG WITH THIS PUBLICATION?

FROM: (PRINT YOUR UNIT'S COMPLETE ADDRESS)

DATE SENT

PUBLICATION NUMBER	PUBLICATION DATE	PUBLICATION TITLE
TM 10-3930-641-24P	27 December 1990	UNIT, DS AND GS MAINTENANCE RPSTL FOR TRUCK, CONTAINER HANDLER, ROUGH TERRAIN, 50,000 LB.

BE EXACT. PIN-POINT WHERE IT IS				IN THIS SPACE TELL WHAT IS WRONG AND WHAT SHOULD BE DONE ABOUT IT:
PAGE NO	PARA-GRAPH	FIGURE NO	TABLE NO	

PRINTED NAME, GRADE OR TITLE, AND TELEPHONE NUMBER	SIGN HERE

DA FORM 1 JUL 79 2028-2

PREVIOUS EDITIONS ARE OBSOLETE.

P.S.--IF YOUR OUTFIT WANTS TO KNOW ABOUT YOUR RECOMMENDATION MAKE A CARBON COPY OF THIS AND GIVE IT TO YOUR HEADQUARTERS.

best copy available

Reproduced from poor document.

REVERSE OF DA FORM 2028-2

FILL IN YOUR UNIT'S ADDRESS

FOLD BACK

DEPARTMENT OF THE ARMY

OFFICIAL BUSINESS

Commander
US Army Tank-Automotive Command
ATTN: AMSTA-MB
Warren, Michigan 48397-5000

TEAR ALONG PERFORATED LINE

RECOMMENDED CHANGES TO EQUIPMENT TECHNICAL PUBLICATIONS

SOMETHING WRONG WITH THIS PUBLICATION?

FROM: (PRINT YOUR UNIT'S COMPLETE ADDRESS)

DATE SENT

PUBLICATION NUMBER	PUBLICATION DATE	PUBLICATION TITLE
TM 10-3930-641-24P	27 December 1990	UNIT, DS AND GS MAINTENANCE RPSTL FOR TRUCK, CONTAINER HANDLER, ROUGH TERRAIN, 50,000 LB.

BE EXACT. PIN-POINT WHERE IT IS				IN THIS SPACE TELL WHAT IS WRONG AND WHAT SHOULD BE DONE ABOUT IT:
PAGE NO	PARA-GRAPH	FIGURE NO	TABLE NO	

PRINTED NAME, GRADE OR TITLE, AND TELEPHONE NUMBER	SIGN HERE

DA FORM 1 JUL 79 2028-2

PREVIOUS EDITIONS ARE OBSOLETE.

P.S.--IF YOUR OUTFIT WANTS TO KNOW ABOUT YOUR RECOMMENDATION MAKE A CARBON COPY OF THIS AND GIVE IT TO YOUR HEADQUARTERS.

REVERSE OF DA FORM 2028-2

TEAR ALONG PERFORATED LINE

FILL IN YOUR UNIT'S ADDRESS

FOLD BACK

DEPARTMENT OF THE ARMY

OFFICIAL BUSINESS

Commander
US Army Tank-Automotive Command
ATTN: AMSTA-MB
Warren, Michigan 48397-5000

RECOMMENDED CHANGES TO EQUIPMENT TECHNICAL PUBLICATIONS

SOMETHING WRONG WITH THIS PUBLICATION?

FROM: (PRINT YOUR UNIT'S COMPLETE ADDRESS)

DATE SENT

PUBLICATION NUMBER	PUBLICATION DATE	PUBLICATION TITLE
TM 10-3930-641-24P	27 December 1990	UNIT, DS AND GS MAINTENANCE RPSTL FOR TRUCK, CONTAINER HANDLER, ROUGH TERRAIN, 50,000 LB.

BE EXACT. PIN-POINT WHERE IT IS

PAGE NO	PARA-GRAPH	FIGURE NO	TABLE NO

IN THIS SPACE TELL WHAT IS WRONG AND WHAT SHOULD BE DONE ABOUT IT:

PRINTED NAME, GRADE OR TITLE, AND TELEPHONE NUMBER

SIGN HERE

DA FORM 1 JUL 79 2028-2

PREVIOUS EDITIONS ARE OBSOLETE.

P.S.--IF YOUR OUTFIT WANTS TO KNOW ABOUT YOUR RECOMMENDATION MAKE A CARBON COPY OF THIS AND GIVE IT TO YOUR HEADQUARTERS

REVERSE OF DA FORM 2028-2

TEAR ALONG PERFORATED LINE

FILL IN YOUR
UNIT'S ADDRESS

FOLD BACK

DEPARTMENT OF THE ARMY

OFFICIAL BUSINESS

Commander
US Army Tank-Automotive Command
ATTN: AMSTA-MB
Warren, Michigan 48397-5000

RECOMMENDED CHANGES TO EQUIPMENT TECHNICAL PUBLICATIONS

SOMETHING WRONG WITH THIS PUBLICATION?

FROM: (PRINT YOUR UNIT'S COMPLETE ADDRESS)

DATE SENT

PUBLICATION NUMBER	PUBLICATION DATE	PUBLICATION TITLE
TM 10-3930-641-24P	27 December 1990	UNIT, DS AND GS MAINTENANCE RPSTL FOR TRUCK, CONTAINER HANDLER, ROUGH TERRAIN, 50,000 LB.

BE EXACT. . . PIN-POINT WHERE IT IS				IN THIS SPACE TELL WHAT IS WRONG AND WHAT SHOULD BE DONE ABOUT IT:
PAGE NO	PARA-GRAPH	FIGURE NO	TABLE NO	

PRINTED NAME, GRADE OR TITLE, AND TELEPHONE NUMBER	SIGN HERE

DA FORM 1 JUL 79 2028-2

PREVIOUS EDITIONS ARE OBSOLETE.

P.S.--IF YOUR OUTFIT WANTS TO KNOW ABOUT YOUR RECOMMENDATION MAKE A CARBON COPY OF THIS AND GIVE IT TO YOUR HEADQUARTERS.

REVERSE OF DA FORM 2028-2

FILL IN YOUR UNIT'S ADDRESS

FOLD BACK

DEPARTMENT OF THE ARMY

OFFICIAL BUSINESS

Commander
US Army Tank-Automotive Command
ATTN: AMSTA-MB
Warren, Michigan 48397-5000

TEAR ALONG PERFORATED LINE

RECOMMENDED CHANGES TO EQUIPMENT TECHNICAL PUBLICATIONS

SOMETHING WRONG WITH THIS PUBLICATION?

FROM: (PRINT YOUR UNIT'S COMPLETE ADDRESS)

DATE SENT

PUBLICATION NUMBER	PUBLICATION DATE	PUBLICATION TITLE
TM 10-3930-641-24P	27 December 1990	UNIT, DS AND GS MAINTENANCE RPSTL FOR TRUCK, CONTAINER HANDLER, ROUGH TERRAIN, 50,000 LB.

BE EXACT. PIN-POINT WHERE IT IS				IN THIS SPACE TELL WHAT IS WRONG AND WHAT SHOULD BE DONE ABOUT IT:
PAGE NO	PARA-GRAPH	FIGURE NO	TABLE NO	

PRINTED NAME, GRADE OR TITLE, AND TELEPHONE NUMBER	SIGN HERE

DA FORM 1 JUL 79 2028-2

PREVIOUS EDITIONS ARE OBSOLETE.

P.S.--IF YOUR OUTFIT WANTS TO KNOW ABOUT YOUR RECOMMENDATION MAKE A CARBON COPY OF THIS AND GIVE IT TO YOUR HEADQUARTERS.

TEAR ALONG PERFORATED LINE

FILL IN YOUR UNIT'S ADDRESS

FOLD BACK

DEPARTMENT OF THE ARMY

OFFICIAL BUSINESS

Commander
US Army Tank-Automotive Command
ATTN: AMSTA-MB
Warren, Michigan 48397-5000

PIN: 045975-000